GRUPO GAES
SISTEMAS MECÁNICOS

Rodamientos Oscilantes de Rodillos

SRB

TIMKEN

V250210

TIMKEN

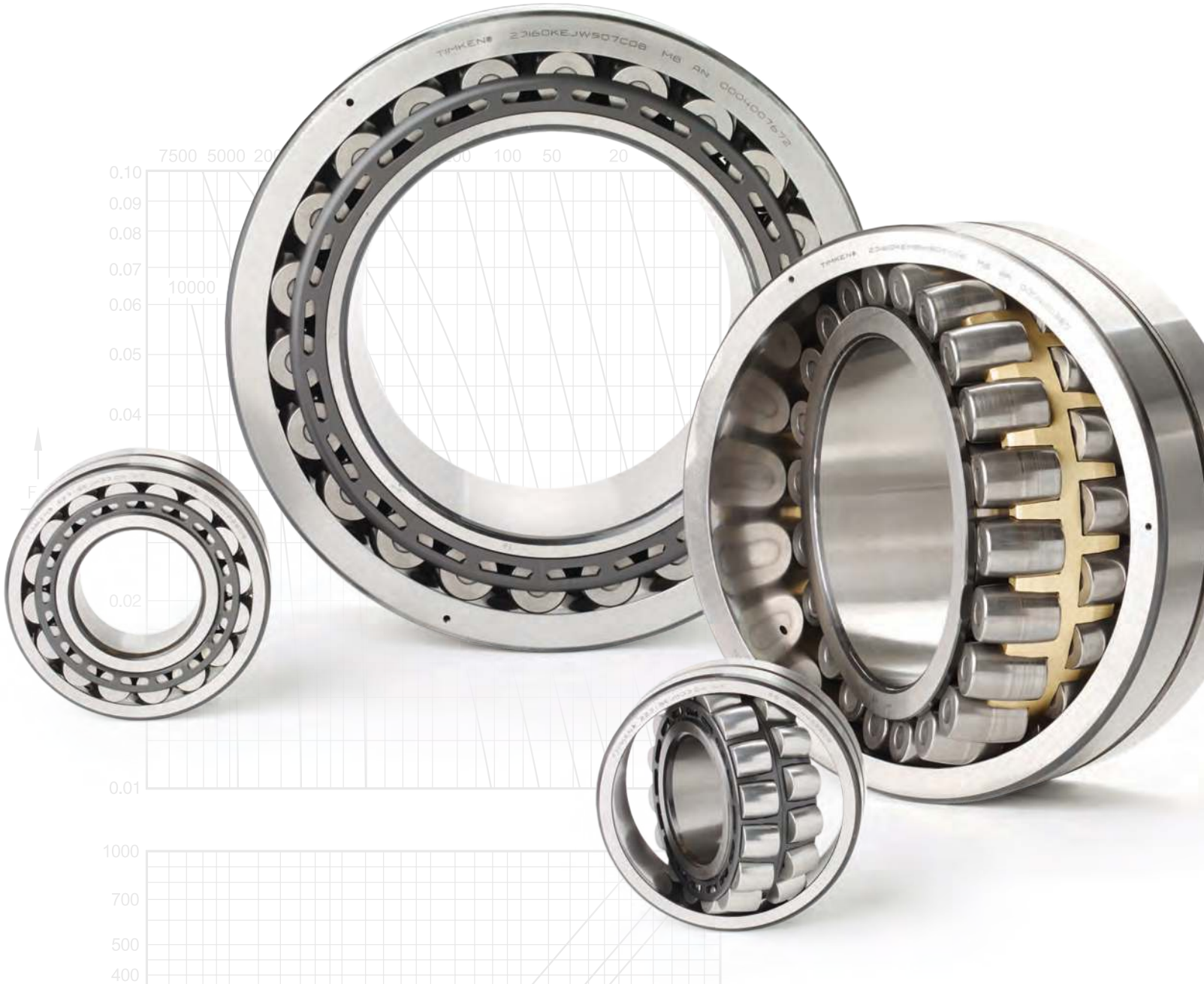

TIMKEN® SPHERICAL ROLLER BEARING CATALOG

SPHERICAL ROLLER BEARING CATALOG INDEX

TIMKEN OVERVIEW 2
INTRODUCTION 4
SHELF LIFE 12

ENGINEERING 15
Bearing Types and Cages 16
Metric System Tolerances 18
Mounting, Fitting, Setting and Installation 21
Shaft and Housing Fits 30
Operating Temperatures 46
Heat Generation and Dissipation 49
Torque 50
Lubrication 51

SPHERICAL ROLLER BEARINGS 63
Nomenclature 64
Modification Codes 65
Spherical Roller Bearings 66

SNT SPHERICAL ROLLER BEARING PLUMMER BLOCKS 95
Nomenclature 96
Introduction 97
Design and Construction 97
Mounting 98
SNT Lubrication 99
Seals 99
Load Ratings and Life 100
Installation Guides 101
Two-Bolt SNT Housings For Tapered Bore Bearings 106
Four-Bolt FSNT Housings For Tapered Bore Bearings 112
Two-Bolt SNT Housings For Cylindrical Bore Bearings 116
Four-Bolt FSNT Housings for Cylindrical Bore Bearings 120
Large Plummer Block Housings – 3000 And 3100 Series 124
Metric Shaft Diameters 128

SAF SPHERICAL ROLLER BEARING PILLOW BLOCKS 129
Nomenclature 130
Introduction 131
Design and Construction 132
Mounting 132
Lubrication 133
Seals 133
Load Ratings and Life 133
Inch Tapered Bore Mounting SAF225 and SAF226 Series 134
Inch Tapered Bore Mounting SDAF225 and SDAF226 Series 144
Inch Tapered Bore Mounting SAF230K and SDAF230K Series . . 148
Inch Tapered Bore Mounting SDAF231K and SDAF232K Series . 152
Inch Straight Bore Mounting SAF222 and SAF223 Series 154
Inch Straight Bore Mounting SDAF222 and SDAF223 Series 156
Inch Straight Bore Mounting SDAF231 and SDAF232 Series 158
Inch Shaft Diameters 160
Inch TU Take-Up Units 161
Inch TTU Take-Up Units 162
Inch DUSTAC® Shaft Seal 164

SPHERICAL ROLLER BEARING METRIC AND INCH ACCESSORIES 165
Nomenclature 166
Accessories Prefixes and Suffixes 167
Inch Sine Bar Gages 168

METRIC ACCESSORIES
Metric Accessories Index 169
Metric H Adapter Sleeves 175
Metric HE Adapter Sleeves for Inch Shaft 179
Metric HA Adapter Sleeves for Inch Shaft 181
Metric OH Hydraulic Adapter Sleeves 183
Metric AH Withdrawal Sleeves 187
Metric AOH Hydraulic Withdrawal Sleeves 192
Metric HMV Hydraulic Nuts 197
Metric Locknuts 201
Metric Lockwashers 207
Metric Lockplates 209

INCH ACCESSORIES
Inch Accessories – Pull-Type Sleeves 211
Inch Accessories – Push-Type Sleeves 220
Inch Accessories – Locknuts and Lockwashers 224
Inch Accessories – Locknuts and Lockplates 228
Inch HMVC Hydraulic Nuts 232

GROW STRONGER WITH TIMKEN

Every day, people around the world count on the strength of Timken. Our expertise in metallurgy, friction management and mechanical power transmission helps them accelerate improvements in productivity and uptime.

We supply products and services that can help keep your operations moving forward, whether you need drive train kits for commercial vehicles, durable housings for bearings in dirty environments, couplings that avoid metal-to-metal contact between motors and gearboxes, repair services for bearings and gearboxes, roller chain for dry, abrasive and high-moisture applications or other products or services for your applications.

When you choose Timken, you receive more than high-quality products and services: you gain a worldwide team of highly trained and experienced Timken people committed to working collaboratively with you to improve your business.

Globally, our 17,000 people provide reliable answers for a wide range of operations in manufacturing, mining, medical equipment, aerospace, transportation, oil and gas – and other diverse industries.

INCREASE YOUR EQUIPMENT UPTIME

In addition to high-quality bearings and mechanical power transmission components, we provide valuable integrated products and services. For example, we offer repair services, on-site technical support and industrial services for inspecting, repairing and upgrading gearboxes, electric motors and controls.

Additionally, we offer a broad selection of seals, premium lubricants, lubricators, couplings and chain to keep your operations moving smoothly.

Our 12 technology centers in the United States, Europe and Asia help pioneer tomorrow's innovations with extensive basic and applied scientific research programs. Through internal development and strategic acquisition of innovative companies, we continue to expand our portfolio of highly engineered bearings, power transmission products and advanced services.

INDUSTRIAL INNOVATOR

Today, manufacturing and processing equipment handle heavier loads, faster speeds and greater expectations than ever before. As finished-product quality requirements increase, producers continue to place a very high premium on equipment uptime and performance.

Timken has more than a century of experience developing bearings and related solutions that help equipment run more efficiently in a wide range of applications. As the leader in friction-management and power-transmission solutions for industrial markets, Timken helps operators improve their equipment's performance and uptime. We accomplish this by providing custom solutions – from bearings that stand-up to the harshest environments to repair, and technical support that minimizes maintenance costs and improves plant productivity.

INNOVATION AND CUSTOMER SUPPORT

Timken operates technology centers around the world dedicated to developing innovative concepts and products that help you operate more efficiently. Our technical leadership and customer support reach far beyond our products. Timken customers have access to sales and service engineering support at their plants, and options for additional support from application engineers who specialize in a variety of industrial applications.

CORE CAPABILITIES

Timken has evolved from its early roots as a bearing producer to a supplier offering much more, including friction management and power transmission solutions that add value throughout the complete life cycle of a system. Our material enhancements improve bearing life and can protect against debris and corrosion – two challenges encountered frequently in various industrial applications. Our precision manufacturing capabilities and commitment to quality ensure global consistency in design and manufacturing at every Timken facility. A global distribution network provides our customers with easy access to Timken products and services throughout the world.

We leverage these core capabilities as we work with original equipment manufacturers (OEM) and designers to integrate our technologies into equipment so that end users can enjoy the performance benefits of Timken products from the first day of operation. OEMs depend on Timken for our engineering expertise, manufacturing capabilities and emphasis on reliable performance.

INCREASED PERFORMANCE AND UPTIME
LONGER BEARING LIFE
LOWER OPERATING COSTS

TIMKEN. LEADING SPHERICAL ROLLER BEARING TECHNOLOGY, PERFORMANCE

Timken has set the standard for spherical roller bearing technology – resulting in bearings that offer increased performance and uptime, longer life and lower operating costs. Industry best design practices led to the development of optimized internal geometries and surface finishes, and improved cage and roller piloting design – resulting in bearings that run cooler, faster, and longer than the competition. With a significant investment in technology and infrastructure, Timken engineering and manufacturing processes adhere to stringent standards, ensuring globally consistent quality.

You can rely on Timken every time.

ADVANCED BEARING AND CAGE DESIGN

	Type EJ Bearing Design	Increased Performance	Stronger Results
1	Above pitch cage design increases cage stiffness.	Reduces stress under shock loading or high acceleration conditions.	Better able to handle tough application conditions.
2	Cage pocket guides roller.*	Eliminates the need for a center guide ring – reducing friction and lowering bearing operating temperatures.	Allows the bearing to operate under higher loads and speeds.
3	Hardened cage on all sizes.*	Provides wear resistance and fatigue strength at higher levels.	Lower operating temperatures lead to longer lubricant life, which leads to longer bearing life.
4	Face slots in cage.*	Provides better oil lubricant flow and contaminant purging, and reduces weight.	

* Timken is the only manufacturer to offer all of these features as standard for the entire steel cage offering.

	Type EM Bearing Design	Increased Performance	Stronger Results
1	Robust design.	Better able to handle shock and high vibration applications.	Longer life in applications that have high levels of shock and vibration.
2	Optimized cage bridge.	Design supports solid operation in extreme environments.	
3	Optimized roller and cage pocket design.	Optimizes roller guidance and reduces internal friction.	

CHOOSE TIMKEN STRENGTH

Cooler Running Bearings Last Longer

- In side-by-side application testing under identical loads, speeds, and lubrication conditions, Timken bearings ran between 3° C and 8° C cooler than our competitors' leading products.
- Lower operating temperatures translate to longer lube life and longer bearing life.
- A 5° C decrease in operating temperature can lead to a 9% increase in bearing life.

Industry-Leading Load and Speed Ratings

- By optimizing internal geometry and minimizing internal friction, Timken bearings can run faster and longer.
- Our load and speed ratings are among the highest in the industry.
- Do more with higher load ratings and speed capability.

Performance and Reliability

- In side-by side life testing, under identical conditions, Timken bearings performed better and more consistenly than our competitors' leading products.
- Uptime with leading performance and reliability helps lower operating costs.
- Feel confident that you have the best product operating in your equipment.

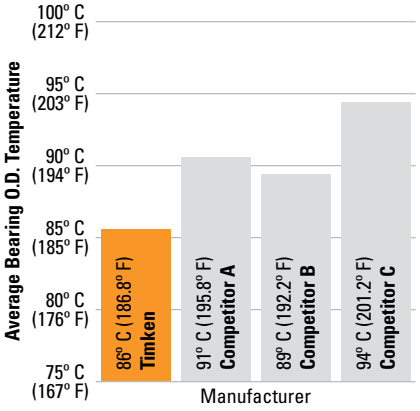

22322EMW33W800C4 SRB from Timken compared to premium competitors. Test conditions: standard vibrating screen application test.

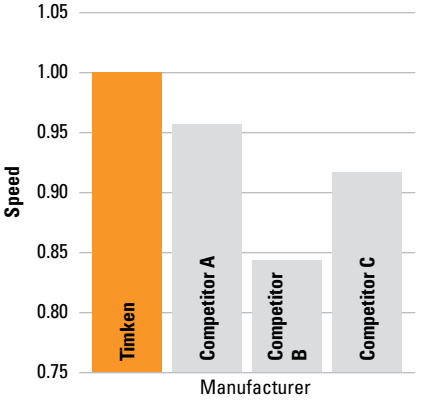

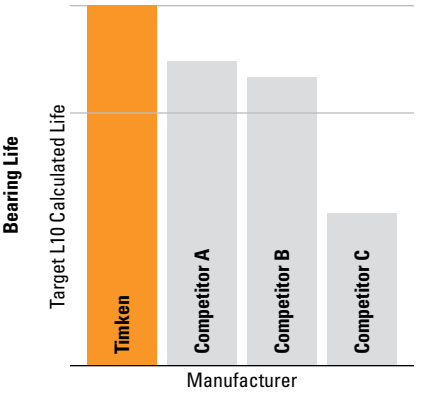

22212EJW33 SRB from Timken compared to premium competitors. Test conditions: Load – 50% of dynamic capacity; Speed – 2700rpm

BROADEST RANGE IN THE INDUSTRY, 25MM BORE TO 1250MM BORE

Timken offers the broadest range of sizes in both steel cage and brass cage designs for spherical roller bearings.

Bore (mm)	Series																					
	213		222		223		230		231		232		233		238		239		240		241	
Cage ▶	Brass	Steel	Brass	Steel	Brass	Steel	Brass	Steel	Brass	Steel	Brass	Steel	Brass	Steel	Brass	Steel	Brass	Steel	Brass	Steel	Brass	Steel
25																						
30																						
35																						
40																						
45																						
50																						
55																						
60																						
65																						
70																						
75																						
80																						
85																						
90																						
95																						
100																						
110																						
120																						
130																						
140																						
150																						
160																						
170																						
180																						
190																						
200																						
220																						
240																						
260																						
280																						
300																						
320																						
340																						
360																						
380																						
400																						
420																						
440																						
460																						
480																						
500																						
530																						
560																						
600																						
630																						
670																						
710																						
750																						
800																						
850																						
900																						
950																						
1000																						
1060																						
1120																						
1180																						
1250																						

PRODUCTS AND SERVICES

We offer equipment builders and operators one of the most extensive friction-management product and service portfolios in the industry.

We also strictly adhere to the Timken Quality Management System in every plant worldwide, so each bearing product meets the same high quality standards – no matter where in the world it is manufactured.

BEARINGS

Putting advanced ideas in motion for more than a century has led to our best-in-class collection of bearings designed for every purpose, every application and every industry. If it moves, chances are we've played a role in the technology behind it. Made from high-performance steel, Timken bearings are better from the start and readily available to deliver the quality and performance that keep equipment moving.

TAPERED ROLLER BEARINGS

Not all bearings will face unforgiving conditions like huge payloads or high-contaminant environments. But when they do, Timken tapered roller bearings can handle the burden – with thousands of combinations in single-, double- and four-row configurations to manage both radial and thrust loads. Customized geometries, engineered surfaces and sealed versions can further enhance performance.

- Increased power density means more performance in a smaller, lighter bearing
- Rated among the highest in the industry for long life and low cost of ownership
- True rolling motion allows for higher speeds with minimum roller skewing or skidding
- Industry's broadest range of inch and metric sizes

CYLINDRICAL ROLLER BEARINGS

Minimize drag. Reduce heat. And perform better, for longer, with less maintenance and downtime. These are the true tests of any bearing. Our expanded line of cylindrical roller bearings – including single-, double- and multi-row versions and full complement designs – can help extend equipment life and reduce maintenance costs.

- EMA high-performance series offers premium brass land-riding cages that help decrease operating temperatures
- Improved mounting capabilities in the four-row line for metal mills help avoid roller/ring damage during roll change for increased uptime
- ADAPT™ line combines cylindrical and spherical roller bearing designs into one easy-to-assemble, high-capacity configuration – ideal for applications with combined misalignment and axial displacement

SPHERICAL ROLLER BEARINGS

Misalignment. Contamination. High temperatures. Even extreme speeds or critical stresses can present extra challenges when managing high radial loads. Timken spherical roller bearings can handle it all, with innovations designed to extend bearing life and boost reliability.

- Run at consistently lower temperatures than same-size competitive bearings for greater reliability
- Multiple cage designs – including a wide range of both steel and brass options – help reduce stress at high shock loads or speeds and provide strong contaminant purge
- Optimized internal geometries deliver the highest load and speed ratings in the industry

THRUST BEARINGS

When axial loads are combined with high speeds, heavy loads or other challenging conditions, thrust bearings deliver optimum performance. Timken offers the range needed for most any application in both standard and custom designs.

- Cylindrical thrust types are suitable for heavy loads at moderate speeds
- Spherical thrust types achieve a high thrust capacity with low friction and continuous roller alignment – even if the shaft and housing become misaligned during operation
- Tapered thrust types are engineered for true rolling motion, which offers increased bearing life and additional load-bearing capacity
- Ball thrust types suit high-speed applications and light loads

BALL BEARINGS

From electric motors to agricultural implements to food processing equipment, Timken ball bearings are engineered to perform in a wide range of applications and conditions.

- Radial ball bearings tolerate relatively high-speed operation under various load conditions
- Angular contact ball bearing designs include contact angles that support both radial and axial loads

HOUSED UNITS

Maintaining critical uptime can require more durable, heavy-duty components capable of protecting spherical, tapered and ball bearings in debris-filled, contaminated or high-moisture environments. Timken has engineered a lineup of housed units – one of the broadest available – to meet these various demands and offer the ideal level of bearing protection.

SNT/SAF PLUMMER (PILLOW) BLOCK HOUSED UNITS

Customizable design, interchangeable components and reliable spherical roller bearings deliver the heavy-duty performance that helps protect equipment and improve uptime in the harshest environments.

- Variety of sealing options keep grease in and contamination out
- Easily convert from fixed to float configurations in the field
- Easy-to-remove cap for inspections, replacement and maintenance

SPHERICAL ROLLER BEARING SOLID BLOCK HOUSED UNITS

Cast steel housings with high-performance spherical roller bearings deliver outstanding durability in extreme conditions, including severe shock loads and vibration.

- Multiple sealing options provide protection from contaminants in the harshest environments
- Can be mounted and aligned in 15 minutes with a variety of available shaft-locking mechanisms
- Easily convert from fixed to float configurations in the field

TYPE E TAPERED ROLLER BEARING HOUSED UNITS

A new standard in performance, Type E tapered roller bearing housed units are ideal for fixed positions and can withstand the most demanding conditions with less downtime and maintenance.

- Seal provides industry-leading protection against contamination
- Optimized internal geometries offer the highest dynamic load ratings in the industry for improved bearing life and performance

BALL BEARING HOUSED UNITS

Timken has delivered innovations that offer advanced performance, including wide inner ring bearing and ball bearing housed units. Easy installation, multi-seal design and multiple housing styles help ball bearing housed units support a wide range of demanding applications and conditions.

- Provide advanced protection against contaminants in a robust, compact unit
- Withstand static misalignment of +/- 3 degrees
- Effective grease retention and reduced debris and moisture ingress improve performance

HIGH-PERFORMANCE BEARING SOLUTIONS

Timken provides a variety of high-performance bearing solutions, including Timken® AquaSpexx®, DuraSpexx® and thin dense chrome bearings for corrosion protection. Our debris-resistant bearings are ideal for contaminated and/or marginal lubrication conditions.

We also provide customized bearing solutions such as special race profiles to meet special application requirements.

In addition to component geometry and metallurgy, we find many ways to enhance bearing performance by applying unique surface finishes and special coatings on rollers, raceways and other functional surfaces. Engineered surfaces and topographical modifications reduce surface roughness to lower levels than what can be achieved through conventional grinding and honing methods. We also offer proprietary coatings that can create a surface up to four times harder than steel with twice the elasticity. For more information on Timken high-performance bearings and engineered surfaces, contact a Timken sales engineer.

POWER TRANSMISSION COMPONENTS AND SYSTEMS

Timken offers an expanding range of power transmission components including seals, couplings and engineered chain.

Extreme temperatures and high contamination levels can disable your equipment and significantly lower productivity. Timken develops seals using advanced material and process solutions that help protect machinery and minimize plant downtime. We offer a comprehensive line of large-bore oil and grease seals, and metallic and non-metallic bearing isolators.

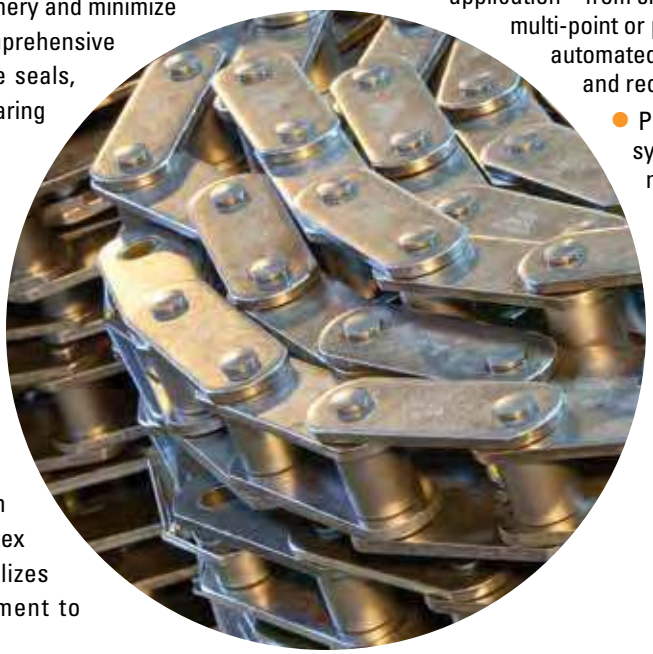

Timken® Quick-Flex® couplings are highly durable, yet need minimal maintenance. They are easy to install and require no lubrication. The couplings are designed to connect motors and gearboxes with other moving equipment with capacity to transmit the same or more torque than a gear coupling in the same dimensions The Quick-Flex coupling's innovative design utilizes an advanced elastomeric element to transmit the torque and therefore eliminates any interference between coupling hubs which can damage equipment.

Timken manufactures precision roller chains that are designed to meet demanding applications. We build chains to precise specifications for strength and maximum wear life. The offering includes a complete line of roller chains, attachment chains and engineered conveyor chains.

LUBRICANTS AND LUBRICATION SYSTEMS

Serving industries around the world, Timken lubricants and lubrication systems are essential in maximizing performance, productivity and uptime.

Leveraging our expertise in tribology and anti-friction bearings, we've developed lubricants – including 27 formulations of grease – that help ensure smooth operation. Our single- and multi-point lubricators, in addition to Interlube automated lubrication delivery systems, dispense precise amounts of grease, saving time and money over manual application.

- High-temperature, anti-wear and water-resistant additives optimize consistent operation in even the most challenging environments
- Multifaceted delivery systems serve virtually any application – from simple, single-point needs to multi-point or progressive systems where an automated process can maximize uptime and reduce maintenance costs
- Patented chain lubrication systems inject oil where it's needed for reduced wear

MAINTENANCE TOOLS

Timken® maintenance tools may extend bearing life by facilitating proper installation, removal and service. They also help simplify maintenance practices. We provide induction heaters, impact fitting tools, and hydraulic and mechanical pullers.

SERVICES

Used bearings and related components often can be returned to their original specifications with less time and costs than purchasing new. We offer complete remanufacture and reconditioning services for many components, including bearings, chocks, housings, rolls and more.

Our gearbox repair services are globally recognized for power transmission solutions in heavy industrial markets, repairing virtually any large gearbox make or model, with on-site emergency breakdown service available if needed.

Timken offers a full range of maintenance and reconditioning services through our remanufacturing and repair operations. Using these services can lead to improved plant efficiency and reduced overall production costs.

TRAINING

We offer industry-specific training programs designed for plant professionals, as well as on-site customized training to meet your specific needs. Our training programs are available at select locations around the world and cover every phase of bearing performance. Class time is balanced with extensive hands-on training and tours of Timken facilities.

HOW TO USE THIS CATALOG

We designed this catalog to help you find the Timken bearings best suited to your equipment needs and specifications. The product tables list spherical roller bearings. For other bearing types, please refer to the respective Timken product catalog reference.

Timken offers an extensive range of bearings and accessories in both imperial and metric sizes. For your convenience, size ranges are indicated in millimeters and inches. Contact your Timken sales engineer to learn more about our complete line for the special needs of your application.

This publication contains dimensions, tolerances and load ratings, as well as engineering sections describing mounting and fitting practices for shafts and housings, internal clearances, materials and other bearing features. It provides valuable assistance in the initial consideration of the type and characteristics of the bearings that may best suit your particular needs.

ISO and ANSI/ABMA, as used in this publication, refer to the International Organization for Standardization and the American National Standards Institute/American Bearing Manufacturers Association.

SHELF LIFE AND STORAGE OF GREASE-LUBRICATED BEARINGS AND COMPONENTS

To help you get the most value from our products, Timken provides guidelines for the shelf life of grease-lubricated ball and roller bearings, components and assemblies. Shelf life information is based on Timken and industry test data and experience.

TIMKEN IS NOT RESPONSIBLE FOR THE SHELF LIFE OF ANY BEARING/COMPONENT LUBRICATED BY ANOTHER PARTY.

SHELF LIFE

Shelf life should be distinguished from lubricated bearing/component design life as follows:

Shelf life of the grease-lubricated bearing/component represents the period of time prior to use or installation.

The shelf life is a portion of the anticipated aggregate design life. It is impossible to accurately predict design life due to variations in lubricant bleed rates, oil migration, operating conditions, installation conditions, temperature, humidity and extended storage.

Shelf life values, available from Timken, represent a maximum limit and assume adherence to the storage and handling guidelines suggested in this catalog or by a Timken associate. Deviations from the Timken storage and handling guidelines may reduce shelf life. Any specification or operating practice that defines a shorter shelf life should be used.

Timken cannot anticipate the performance of the grease lubricant after the bearing or component is installed or placed in service.

European REACH Compliance

Timken lubricants, greases and similar products sold in standalone containers or delivery systems are subject to the European REACH (Registration, Evaluation, Authorization and Restriction of CHemicals) directive. For import into the European Union, Timken can sell and provide only those lubricants and greases that are registered with ECHA (European CHemical Agency). For further information, please contact your Timken sales engineer.

STORAGE

Timken suggests the following storage guidelines for our finished products (bearings, components and assemblies, referred to as "products"):

- Unless directed otherwise by Timken, products should be kept in their original packaging until they are ready to be placed into service.
- Do not remove or alter any labels or stencil markings on the packaging.
- Products should be stored in such a way that the packaging is not pierced, crushed or otherwise damaged.
- After a product is removed from its packaging, it should be placed into service as soon as possible.
- When removing a product that is not individually packaged from a bulk pack container, the container should be resealed immediately after the product is removed.
- Do not use product that has exceeded its shelf life. Contact your local Timken sales engineer for further information on shelf life limits.
- The storage area temperature should be maintained between 0º C (32º F) and 40º C (104º F); temperature fluctuations should be minimized.
- The relative humidity should be maintained below 60 percent and the surfaces should be dry.
- The storage area should be kept free from airborne contaminants such as, but not limited to, dust, dirt, harmful vapors, etc.
- The storage area should be isolated from undue vibration.
- Extreme conditions of any kind should be avoided.

Due to the fact that Timken is not familiar with your particular storage conditions, we strongly suggest following these guidelines. However, you may be required by circumstances or applicable government requirements to adhere to stricter storage requirements.

Most bearing components typically ship protected with a corrosion-preventive compound that is not a lubricant. These components may be used in oil-lubricated applications without removal of the corrosion-preventive compound. When using some specialized grease lubrications, we advise you to remove the corrosion-preventive compound before packing the bearing components with suitable grease.

⚠ WARNING
Failure to observe the following warnings could create a risk of death or serious injury.

Proper maintenance and handling practices are critical. Always follow installation instructions and maintain proper lubrication.

Overheated bearings can ignite explosive atmospheres. Special care must be taken to properly select, install, maintain and lubricate housed unit bearings that are used in or near atmospheres that may contain explosive levels of combustible gases or accumulations of dust such as grain, coal, or other combustible materials. Consult your equipment designer or supplier for installation and maintenance instructions.

If hammer and bar are used for installation or removal of a part, use a mild steel bar (e.g., 1010 or 1020 grade). Mild steel bars are less likely to cause release of high speed fragments from the hammer or bar or the part being installed or removed.

CAUTION
Failure to follow these cautions may result in property damage.

Do not use damaged housed units.

NOTE

Do not use excessive force when mounting or dismounting the unit.

Follow all tolerance, fit, and torque recommendations.

Always follow the Original Equipment Manufacturer's installation and maintenance guidelines.

Ensure proper alignment.

Never weld housed units.

Do not heat components with an open flame.

Do not operate at bearing temperatures above 250˚ F (121˚ C).

DISCLAIMER

This catalog is provided solely to give you analysis tools and data to assist you in your product selection. Product performance is affected by many f actors beyond the control of Timken.

Therefore, the suitability and feasibility of all product selection must be validated by you.

Timken products are sold subject to Timken's terms and conditions of sale, which include its limited warranty and remedy, which terms may be found at www.timken.com/termsandconditionsofsale. Please consult with your Timken sales engineer for more information and assistance.

Every reasonable effort has been made to ensure the accuracy of the information in this writing, but no liability is accepted for errors, omissions or for any other reason.

COMPLIANCE

To view the complete engineering catalog, please visit www.timken.com. To order the catalog, please contact your Timken sales engineer and request a copy of the Timken Engineering Manual (order number 10424).

European REACH compliance *Timken-branded lubricants, greases and similar products sold in stand-alone containers or delivery systems are subject to the European REACH (**R**egistration, **E**valuation, **A**uthorization and Restriction of **CH**emicals) directive. For import into the European Union, Timken can sell and provide only those lubricants and greases that are registered with ECHA (**E**uropean **CH**emical **A**gency). For further information, please contact your Timken sales engineer.*

The Timken Company products shown in this catalog may be directly, or indirectly subject to a number of regulatory standards and directives originating from authorities in the USA, European Union, and around the world, including: REACH (EC 1907/2006, RoHS (2011/65/EU), ATEX (94/9/EC), 'CE' MARKING (93/68/EEC), CONFLICT MINERALS (Section 1502 of the Dodd-Frank Wall Street Reform and Consumer Protection Act).

For any questions or concerns regarding the compliancy or applicability of Timken products to these, or other unspecified standards, please contact your Timken sales engineer or customer services representative.

Updates are made periodically to this catalog. Visit www.timken.com for the most recent version of the Timken Spherical Roller Bearing Catalog.

ENGINEERING

The following topics are covered within this engineering section:

- Spherical roller bearing design types.
- Cage design types.
- Fitting practice and mounting recommendations.
- Lubrication recommendations.

This engineering section is not intended to be comprehensive, but does serve as a useful guide in spherical roller bearing selection.

To view the complete engineering catalog, please visit www.timken.com. To order the catalog, please contact your Timken sales engineer and request a copy of the Timken Engineering Manual, order number 10424.

ENGINEERING 15
Bearing Types and Cages 16
Metric System Tolerances 18
Mounting, Fitting, Setting and Installation 21
Shaft and Housing Fits 30
Operating Temperatures 46
Heat Generation and Dissipation 49
Torque 50
Lubrication 51

To view more Timken catalogs, go to www.timken.com/catalogs for interactive versions, or to download a catalog app for your smart phone or mobile device scan the QR code or go to timkencatalogs.squawqr.com.

RADIAL SPHERICAL ROLLER BEARING TYPES AND CAGES

The principle styles of radial spherical roller bearings that Timken offers are:

- ≤600 mm outer diameter: EJ, EM and EMB
- >600 mm outer diameter: YMB, YMD and YP

Above suffixes correspond to different types of designs depending on a bearing size and geometry. Main differences are the cage type used in the assembly. Spherical roller bearings with an EJ cage suffix are fitted with a hardened stamped-steel cage. YM/EM/YMB and YMD suffixes are used with brass cage designs. YP is a pin-type cage specific for large diameter bearings.

The high performance Timken® EJ, EM and EMB bearings offer higher load ratings, increased thermal speed ratings and reduced operating temperatures compared to the previous offering.

In addition to these improvements, cage designs vary between the different styles as noted below. See the cage section for more details.

Style	Cage Design
EJ	Land-riding steel cage; one per row
EM/YM	Roller-riding one-piece brass cage
EMB/YMB	Land-riding one-piece brass cage
YMD	Land-riding two-piece brass cage
YP	Steel pin-type cage

Most Timken spherical roller bearings are available with a cylindrical bore as well as a tapered bore. Tapered bore bearing part numbers are designated with a K suffix.

A taper of 1:12 is standard except for 240, 241 and 242 series, which have a taper of 1:30.

Fig. 1. Radial spherical roller bearings.

OPTIONAL FEATURES AVAILABLE WITH TIMKEN SPHERICAL ROLLER BEARINGS

W33 lubrication groove and oil holes

A lubrication groove and three oil holes are provided in the bearing outer ring as standard. This is designated by the W33 suffix. It eliminates the expense of machining a channel in the housing bore for introducing lubricant to the bearing. This design feature allows the lubricant to flow between the roller paths, through a single lubrication fitting. The lubricant moves laterally outward from the center of the bearing, reaching all contact surfaces and flushing the bearing. To order, add the suffix W33 to the bearing number (e.g. 22216EW33).

Bearings for vibratory applications

Timken offers specific spherical roller bearing designs for vibratory applications. They are designated by the W800 modification code and made to a C4 clearance. Specify W800 when ordering. This design provides:

- A lubrication groove on the outer ring with three lubrication holes to facilitate bearing lubrication.
- Reduced bore and outside diameter tolerances.
- Radial internal clearance is made in upper two-thirds of C4 clearance range.

These bearings are available with either a cylindrical or tapered bore. Other optional features are available. See page 65, table 27 or consult with your Timken sales engineer.

CAGES

Cages (also referred to as rolling element retainers) serve several purposes in the proper operation of a rolling element bearing. Cages separate the rolling elements and prevent rolling element on rolling element contact and wear. Cages align the rolling elements on the inner ring to prevent rolling element sliding, skidding, and skewing to facilitate true rolling motion. For handling purposes, cages retain the rolling elements on the inner ring assembly to allow for bearing installation. In some instances, cages also improve flow of the lubricant to the bearing inner ring raceways.

The following sections discuss the common types of cages used for spherical roller bearings. The basic design geometry, material, and manufacture are discussed for each cage type.

STAMPED-STEEL CAGES

Timken® EJ bearings incorporate a unique stamped-steel cage design as shown in fig. 1.

The EJ design includes two independent cages (fig. 2), one for each row of rollers, which are assembled into an individual bearing. This feature allows each path of cage and rollers to operate independently, and prevents the cage from bending.

This cage is guided on the inner ring and runs above pitch. Each cage is surface hardened (nitrided) to provide improved wear resistance as well as additional strength to allow the bearing to operate in even the most severe environment. Face slots have been designed for improved lubrication flow. This can result in a lower operating temperature and longer bearing life.

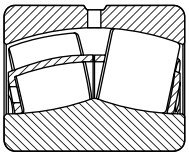

Fig. 2. EJ bearings.

Fig. 3. EJ steel cage.

Fig. 5. EM/YM
One-piece, machined-brass, roller-riding, finger-type cage.

Fig. 6. EMB/YMB
One-piece, machined-brass, land-riding, finger-type cage.

Fig. 7. YMD
Split, machined-brass, land-riding, finger-type cage.

MACHINED-BRASS CAGE

EM, EMB, YM, YMB and YMD bearing cages are precision-machined from brass as shown in figs. 4-7. Their rugged construction provides an advantage in more severe applications. The open-end, finger-type design permits lubricant to reach all surfaces easily, ensuring ample lubrication and a cooler running bearing.

EM, EMB, YM and YMB are all one-piece designs that are differentiated by their means of guidance within the bearing. With EM and YM designs, the cage mass is low and the rollers are used for guidance, while EMB and YMB cage designs typically have more mass and guide on the inner ring.

YMD cages are similar to YMB, except they have a two-piece design. Two independent cages, one for each row of rollers, are assembled into an individual bearing. This allows each row of rollers to rotate independently when required by the application, and minimizes bending of the cage fingers.

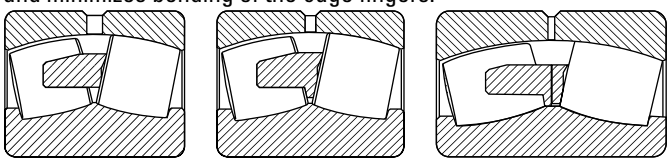

YM/EM **YMB/EMB** **YMD**

Fig. 4. Machined cages.

PIN-TYPE CAGES

Large diameter spherical roller bearings can be supplied with these cages. Pin-type cages, one for each row of rollers, consist of two rings and a series of pins running through the center of the rolling element. The design of pin-type cages permits an increased roller complement, giving the bearing enhanced load-carrying ability. Consult your Timken sales engineer for suggestions on the application of this cage.

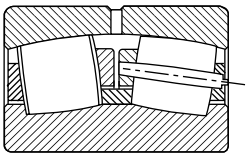

Fig. 8. Pin-type cage.

METRIC SYSTEM TOLERANCES
SPHERICAL ROLLER BEARINGS

Spherical roller bearings are manufactured to a number of specifications, with each having classes that define tolerances on dimensions such as bore, O.D., width and runout. Metric bearings have been manufactured to corresponding standard negative tolerances.

Table 1 summarizes the different specifications and classes for spherical roller bearings. For the purposes of this catalog, ISO specifications are shown for spherical roller bearings.

Boundary dimension tolerances for spherical roller bearing usage are listed in the following tables. These tolerances are provided for use in selecting bearings for general applications, in conjunction with the bearing mounting and fitting practices offered in later sections.

TABLE 1. BEARING SPECIFICATIONS AND CLASSES

System	Specification	Bearing Type	Standard Bearing Class		Precision Bearing Class			
Metric	ISO/DIN	All Bearing Types	P0	P6	P5	P4	P2	---
Imperial	ABMA	Spherical	RBEC 1	RBEC 3	RBEC 5	RBEC 7	RBEC 9	---

Standard Timken radial spherical roller bearings maintain normal tolerances according to ISO 492. Tables 2 and 3 list the critical tolerances for these bearing types. For applications where running tolerance is critical, P6 or P5 tolerances are recommended.

The term deviation is defined as the difference between a single ring dimension and the nominal dimension. For metric tolerances, the nominal dimension is at a +0 mm (0 inch) tolerance. The deviation is the tolerance range for the listed parameter. Variation is defined as the difference between the largest and smallest measurements of a given parameter for an individual ring.

TABLE 2. SPHERICAL ROLLER BEARING TOLERANCES – INNER RING (METRIC)[1]

Bearing Bore		Bore Deviation[2] Δ_{dmp}			Width Variation V_{BS}			Radial Runout K_{ia}			Face Runout with Bore S_d	Axial Runout S_{ia}	Width Deviation Inner & Outer Rings[2] Δ_{Bs} and Δ_{Cs}	
Over	Incl.	P0	P6	P5	P0	P6	P5	P0	P6	P5	P5	P5	P0, P6	P5
mm in.	**mm** in.	**mm** in.	**mm** in.	**mm** in.	**mm** in.	**mm** in.	**mm** in.	**mm** in.	**mm** in.	**mm** in.	**mm** in.	**mm** in.	**mm** in.	**mm** in.
2.5000	**10.000**	**-0.008**	**-0.007**	**-0.005**	**0.015**	**0.015**	**0.005**	**0.010**	**0.006**	**0.004**	**0.007**	**0.007**	**-0.120**	**-0.040**
0.0984	0.3937	-0.0003	-0.0003	-0.0002	0.0006	0.0006	0.0002	0.0004	0.0002	0.0002	0.0003	0.0003	-0.0047	-0.0157
10.000	**18.000**	**-0.008**	**-0.007**	**-0.005**	**0.020**	**0.020**	**0.005**	**0.010**	**0.007**	**0.004**	**0.007**	**0.007**	**-0.120**	**-0.080**
0.3937	0.7087	-0.0003	-0.0003	-0.0002	0.0008	0.0008	0.0002	0.0004	0.0003	0.0002	0.0003	0.0003	-0.0047	-0.0031
18.000	**30.000**	**-0.010**	**-0.008**	**-0.006**	**0.020**	**0.020**	**0.005**	**0.013**	**0.008**	**0.004**	**0.008**	**0.008**	**-0.120**	**-0.120**
0.7087	1.1811	-0.0004	-0.0003	-0.0002	0.0008	0.0008	0.0002	0.0005	0.0003	0.0002	0.0003	0.0003	-0.0047	-0.0047
30.000	**50.000**	**-0.012**	**-0.010**	**-0.008**	**0.020**	**0.020**	**0.005**	**0.015**	**0.010**	**0.005**	**0.008**	**0.008**	**-0.120**	**-0.120**
1.1811	1.9685	-0.0005	-0.0004	-0.0003	0.0008	0.0008	0.0002	0.0006	0.0004	0.0002	0.0003	0.0003	-0.0047	-0.0047
50.000	**80.000**	**-0.015**	**-0.012**	**-0.009**	**0.025**	**0.025**	**0.006**	**0.020**	**0.010**	**0.005**	**0.008**	**0.008**	**-0.150**	**-0.150**
1.9685	3.1496	-0.0006	-0.0005	-0.0004	0.0010	0.0010	0.0002	0.0008	0.0004	0.0002	0.0003	0.0003	-0.0059	-0.0059
80.000	**120.000**	**-0.020**	**-0.015**	**-0.010**	**0.025**	**0.025**	**0.007**	**0.025**	**0.013**	**0.006**	**0.009**	**0.009**	**-0.200**	**-0.200**
3.1496	4.7244	-0.0008	-0.0006	-0.0004	0.0010	0.0010	0.0003	0.0010	0.0005	0.0002	0.0004	0.0004	-0.0079	-0.0079
120.000	**150.000**	**-0.025**	**-0.018**	**-0.013**	**0.030**	**0.030**	**0.008**	**0.030**	**0.018**	**0.008**	**0.010**	**0.010**	**-0.250**	**-0.250**
4.7244	5.9055	-0.0010	-0.0007	-0.0005	0.0012	0.0012	0.0003	0.0012	0.0007	0.0003	0.0004	0.0004	-0.0098	-0.0098
150.000	**180.000**	**-0.025**	**-0.018**	**-0.013**	**0.030**	**0.030**	**0.008**	**0.030**	**0.018**	**0.008**	**0.010**	**0.010**	**-0.250**	**-0.250**
5.9055	7.0866	-0.0010	-0.0007	-0.0005	0.0012	0.0012	0.0003	0.0012	0.0007	0.0003	0.0004	0.0004	-0.0098	-0.0098
180.000	**250.000**	**-0.030**	**-0.022**	**-0.015**	**0.030**	**0.030**	**0.010**	**0.040**	**0.020**	**0.010**	**0.011**	**0.013**	**-0.300**	**-0.300**
7.0866	9.8425	-0.0012	-0.0009	-0.0006	0.0012	0.0012	0.0004	0.0016	0.0008	0.0004	0.0004	0.0005	-0.0018	-0.0018
250.000	**315.000**	**-0.035**	**-0.025**	**-0.018**	**0.035**	**0.035**	**0.013**	**0.050**	**0.025**	**0.013**	**0.013**	**0.015**	**-0.350**	**-0.350**
9.8425	12.4016	-0.0014	-0.0010	-0.0007	0.0014	0.0014	0.0005	0.0020	0.0010	0.0005	0.0005	0.0006	-0.0138	-0.0138
315.000	**400.000**	**-0.040**	**-0.030**	**-0.023**	**0.040**	**0.040**	**0.015**	**0.060**	**0.030**	**0.015**	**0.015**	**0.020**	**-0.400**	**-0.400**
12.4016	15.7480	-0.0016	-0.0012	-0.0009	0.0016	0.0016	0.0006	0.0024	0.0012	0.0006	0.0006	0.0008	-0.0157	-0.0157
400.000	**500.000**	**-0.045**	**-0.035**	–	**0.050**	**0.045**	–	**0.065**	**0.035**	–	–	–	**-0.450**	–
15.7480	19.6850	-0.0018	-0.0014	–	0.0020	0.0018	–	0.0026	0.0014	–	–	–	-0.0177	–
500.000	**630.000**	**-0.050**	**-0.040**	–	**0.060**	**0.050**	–	**0.070**	**0.040**	–	–	–	**-0.500**	–
19.6850	24.8031	-0.0020	-0.0016	–	0.0024	0.0020	–	0.0028	0.0016	–	–	–	-0.0197	–
630.000	**800.000**	**-0.075**	–	–	**0.070**	–	–	**0.080**	–	–	–	–	**-0.750**	–
24.8031	31.4961	-0.0030	–	–	0.0028	–	–	0.0031	–	–	–	–	-0.0295	–

[1]Symbol definitions are found on pages 32-33 of the Timken Engineering Manual (order number 10424).
[2]Tolerance range is from +0 to value listed.

TABLE 3. SPHERICAL ROLLER BEARING TOLERANCES – OUTER RING (METRIC)[1]

Bearing O.D.		Outside Deviation[2] Δ_{Dmp}			Width Variation V_{CS}		Radial Runout K_{ea}			Axial Runout S_{ea}	Outside Diameter Runout With Face S_D
Over	Incl.	P0	P6	P5	P0	P6	P0	P6	P5	P5	P5
mm in.	mm in.	mm in.	mm in.	mm in.	mm in.	mm in.	mm in.	mm in.	mm in.	mm in.	mm in.
0.000 0.0000	**18.000** 0.7087	**-0.008** -0.0003	**-0.007** -0.0003	**-0.005** -0.0002	**0.015** 0.0006	**0.005** 0.0002	**0.015** 0.0006	**0.008** 0.0003	**0.005** 0.0002	**0.008** 0.0003	**0.008** 0.0003
18.000 0.7087	**30.000** 1.1811	**-0.009** -0.0004	**-0.008** -0.0003	**-0.006** -0.00024	**0.020** 0.0008	**0.005** 0.0002	**0.015** 0.0006	**0.009** 0.0004	**0.006** 0.00024	**0.008** 0.0003	**0.008** 0.0003
30.000 1.1811	**50.000** 1.9685	**-0.011** -0.0004	**-0.009** -0.0004	**-0.007** -0.0003	**0.020** 0.0008	**0.005** 0.0002	**0.020** 0.0008	**0.010** 0.0004	**0.007** 0.0003	**0.008** 0.0003	**0.008** 0.0003
50.000 1.9685	**80.000** 3.1496	**-0.013** -0.0005	**-0.011** -0.0004	**-0.009** -0.0004	**0.025** 0.0010	**0.006** 0.00024	**0.025** 0.0010	**0.013** 0.0005	**0.008** 0.0003	**0.010** 0.0004	**0.008** 0.0003
80.000 3.1496	**120.000** 4.7244	**-0.015** -0.0006	**-0.013** -0.0005	**-0.010** -0.0004	**0.025** 0.0010	**0.008** 0.0003	**0.035** 0.0014	**0.018** 0.0007	**0.010** 0.0004	**0.011** 0.0004	**0.009** 0.0004
120.000 4.7244	**150.000** 5.9055	**-0.018** -0.0007	**-0.015** -0.0006	**-0.011** -0.0004	**0.030** 0.0012	**0.008** 0.0003	**0.040** 0.0016	**0.020** 0.0008	**0.011** 0.0004	**0.013** 0.0005	**0.010** 0.0004
150.000 5.9055	**180.000** 7.0866	**-0.025** -0.0010	**-0.018** -0.0007	**-0.013** -0.0005	**0.030** 0.0012	**0.008** 0.0003	**0.045** 0.0018	**0.023** 0.0009	**0.013** 0.0005	**0.014** 0.0006	**0.010** 0.0004
180.000 7.0866	**250.000** 9.8425	**-0.030** -0.0012	**-0.020** -0.0008	**-0.015** -0.0006	**0.030** 0.0012	**0.010** 0.0004	**0.050** 0.0020	**0.025** 0.0010	**0.015** 0.0006	**0.015** 0.0006	**0.011** 0.0004
250.000 9.8425	**315.000** 12.4016	**-0.035** -0.0014	**-0.025** -0.0010	**-0.018** -0.0007	**0.035** 0.0014	**0.011** 0.0004	**0.060** 0.0024	**0.030** 0.0012	**0.018** 0.0007	**0.018** 0.0007	**0.013** 0.0005
315.000 12.4016	**400.000** 15.7480	**-0.040** -0.0016	**-0.028** -0.0011	**-0.020** -0.0008	**0.040** 0.0016	**0.013** 0.0005	**0.070** 0.0028	**0.035** 0.0014	**0.020** 0.0008	**0.020** 0.0008	**0.013** 0.0005
400.000 15.7480	**500.000** 19.6850	**-0.045** -0.0018	**-0.033** -0.0013	**-0.023** -0.0009	**0.045** 0.0018	**0.015** 0.0006	**0.080** 0.0031	**0.040** 0.0016	**0.023** 0.0009	**0.023** 0.0009	**0.015** 0.0006
500.000 19.6850	**630.000** 24.8031	**-0.050** -0.0020	**-0.038** -0.0015	**-0.028** -0.0011	**0.050** 0.0020	**0.018** 0.0007	**0.100** 0.0039	**0.050** 0.0020	**0.025** 0.0010	**0.025** 0.0010	**0.018** 0.0007
630.000 24.8031	**800.000** 31.4961	**-0.075** -0.0030	**-0.045** -0.0018	**-0.035** -0.0014	– –	**0.020** 0.0008	**0.120** 0.0047	**0.060** 0.0024	**0.030** 0.0012	**0.030** 0.0012	**0.020** 0.0008
800.000 31.4961	**1000.000** 39.3701	**-0.100** -0.0040	**-0.060** -0.0024	– –	– –	– –	**0.140** 0.0055	**0.075** 0.0030	– –	– –	– –
1000.000 39.3701	**1250.000** 49.2126	**-0.125** -0.0050	– –	– –	– –	– –	**0.160** 0.0063	– –	– –	– –	– –

[1]Symbol definitions are found on pages 32-33 of the Timken Engineering Manual (order number 10424).
[2]Tolerance range is from +0 to value listed.

SPHERICAL ROLLER BEARING MOUNTING, FITTING, SETTING AND INSTALLATION

MOUNTING

Spherical roller bearings can be mounted individually, but most often are mounted in combination with another spherical roller bearing, cylindrical roller bearing, or Timken® ADAPT™ bearing.

With spherical roller bearings, typically one bearing is fixed axially and the other is mounted with loose fits and axial space. This allows movement or float for environmental conditions such as uneven thermal growth between shaft and housing.

Fig. 9 shows a typical gearbox application using two spherical roller bearings where one bearing is free to float and the other bearing is fixed axially.

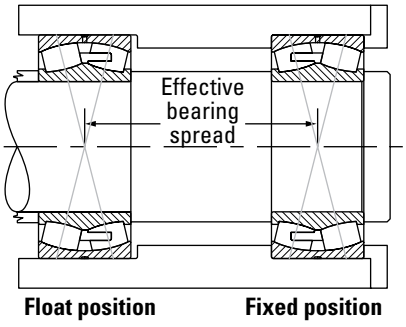

Fig. 9. Spherical roller bearing direct mounting.

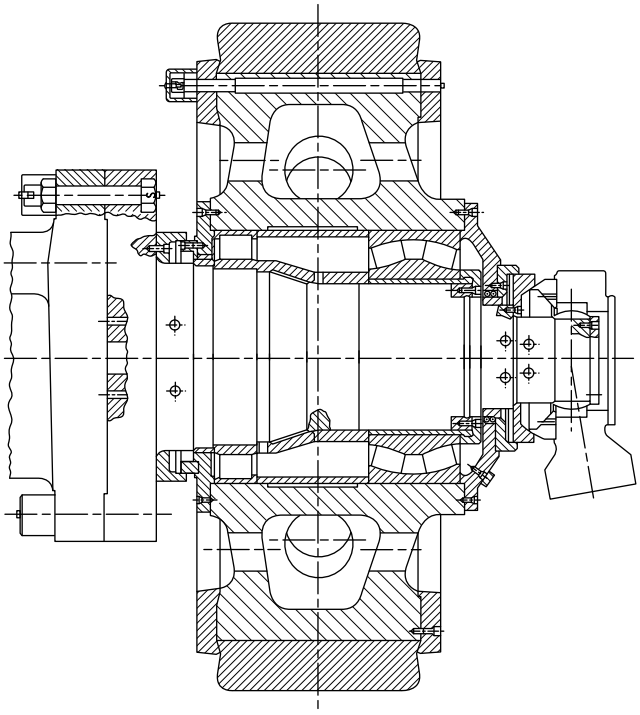

Fig. 10. Pulverizer wheel assembly.

Fig. 10 shows a pulverizer wheel assembly where a double-row spherical roller bearing is mounted in combination with a cylindrical roller bearing. In this application, the cylindrical roller bearing allows the shaft to float relative to the housing.

FITTING PRACTICE

Tables 6-12 on pages 30-45 list the recommended fitting practice for spherical roller bearings. The tables assume:

- The bearing is of normal precision.
- The housing is thick and made from steel or cast iron.
- The shaft is solid and made from steel.
- The bearing seats are ground or accurately turned to less than approximately 1.6 Ra finish.

The suggested fit symbols are in accordance with ISO 286. For help with recommended fitting practice, contact your Timken sales engineer.

As a general guideline, rotating inner rings should be applied with an interference fit. Loose fits may permit the inner rings to creep or turn, and wear the shaft and the backing shoulder. This wear may result in excessive bearing looseness and possible bearing and shaft damage. Additionally, abrasive metal particles resulting from creep or turning may enter into the bearing and cause damage and vibration.

Stationary inner-ring fitting practice depends on the loading of the application. The load conditions and bearing envelope dimensions should be used to select the suggested shaft fit from the tables.

Similarly, rotating outer-ring applications should use an interference fit between the outer ring and housing.

Stationary outer rings are generally mounted with loose fits to permit assembly and disassembly. The loose fit also permits axial movement when a spherical bearing is mounted in the float position.

Thin-walled housings, light-alloy housings, or hollow shafts must use press fits tighter than those required for thick-walled housings, steel, or cast iron housings or solid shafts. Tighter fits also are required when mounting the bearing on relatively rough, or unground surfaces.

⚠ WARNING

Failure to observe the following warnings could create a risk of death or serious injury.

Proper maintenance and handling practices are critical. Always follow installation instructions and maintain proper lubrication.

Never spin a bearing with compressed air. The rollers may be forcefully expelled.

TAPERED BORE DESIGNS

Typically, tapered bore bearings are selected to simplify shaft mounting and dismounting. Since the spherical roller bearing is not separable, mounting can be simplified by use of an adapter sleeve with a cylindrical bore and tapered O.D. A tapered bore roller bearing also can be mounted directly onto a tapered shaft.

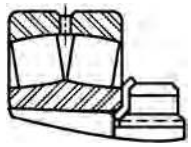

Fig. 11. Mounting with tapered shaft

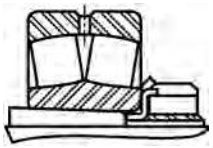

Fig. 12. Mounting with adapter sleeve

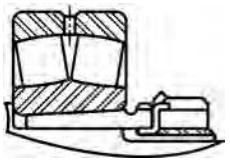

Fig. 13. Mounting with withdrawal sleeve

Bearings with a tapered bore typically require a tighter fit on the shaft than bearings with a cylindrical bore. A locknut is typically used to drive the inner ring up a tapered shaft sleeve. The locknut position is then secured by use of a lockwasher or lockplate. Timken offers a wide range of accessories to ease the assembly of spherical roller bearings with a tapered bore (see page 25). For approximating the clearance loss for axial drive-up, an 85 percent radial loss approximation can be used. That is, the radial clearance loss per axial drive-up can roughly be approximated as 71 µm/mm for a 1:12 tapered bore and 28 µm/mm for a 1:30 tapered bore. Table 5 on page 24 provides a direct relation between suggested RIC (radial internal clearance) reduction due to installation and the corresponding axial displacement of the inner ring.

SETTING

To achieve appropriate operation clearance, attention must be paid to the effects that fitting practice and thermal gradients have within the bearing.

FITTING PRACTICE

- An interference fit between the inner ring and a solid steel shaft will reduce the radial clearance within the bearing by approximately 80 percent of the fit.
- Interference fits between the outer ring and steel or cast iron housing will reduce radial clearance by approximately 60 percent.
- Spherical roller bearings with a tapered bore require a slightly greater interference fit on the shaft than a cylindrical bore bearing.

NOTE

It is critical to select the RIC that allows for this reduction.

THERMAL GRADIENTS

- Thermal gradients within the bearing are primarily a function of the bearing rotational speed. As speed increases, thermal gradients increase, thermal growth occurs and the radial clearance is reduced.
- As a rule of thumb, radial clearance should be increased for speeds in excess of 70 percent of the thermal reference speed.

For help selecting the correct radial internal clearance for your application, consult with your Timken sales engineer.

Radial internal clearance tolerances are listed in tables 4 and 5 for spherical roller bearings.

Spherical roller bearings are ordered with a specified standard or non-standard radial internal clearance value. The standard radial internal clearances are designated as C2, C0 (normal), C3, C4 or C5 and are in accordance with ISO 5753. C2 represents the minimum clearance and C5 represents the maximum clearance. Non-standardized values also are available by special request.

The clearance required for a given application depends on the desired operating precision, the rotational speed of the bearing, and the fitting practice used. Most applications use a normal or C3 clearance. Typically, larger clearance reduces the operating load zone of the bearing, increases the maximum roller load, and reduces the bearing's expected life. However, a spherical roller bearing that has been put into a preload condition can experience premature bearing damage caused by excessive heat generation and/or material fatigue. As a general guideline, spherical roller bearings should not operate in a preloaded condition without special lubrication systems.

TABLE 4. RADIAL INTERNAL CLEARANCE LIMITS – SPHERICAL ROLLER BEARINGS – CYLINDRICAL BORE

Bore (Nominal)		Radial Internal Clearance Prior To Mounting					
			Normal CO		C4		
			Min.	Max.	Min.	Max.	
		C2		C3		C5	
Over	Incl.	Min.	Max.	Min.	Max.	Min.	Max.
mm in.	**mm** in.	**mm** in.	**mm** in.	**mm** in.	**mm** in.	**mm** in.	**mm** in.
20 0.9449	**30** 1.1811	**0.015** 0.0006	**0.025** 0.0010	**0.040** 0.0016	**0.055** 0.0022	**0.075** 0.0030	**0.095** 0.0037
30 1.1811	**40** 1.5748	**0.015** 0.0006	**0.030** 0.0012	**0.045** 0.0018	**0.060** 0.0024	**0.080** 0.0031	**0.100** 0.0039
40 1.5748	**50** 1.9685	**0.020** 0.0008	**0.035** 0.0014	**0.055** 0.0022	**0.075** 0.0030	**0.100** 0.0039	**0.125** 0.0049
50 1.9685	**65** 2.5591	**0.020** 0.0008	**0.040** 0.0016	**0.065** 0.0026	**0.090** 0.0035	**0.120** 0.0047	**0.150** 0.0059
65 2.5591	**80** 3.1496	**0.030** 0.0012	**0.050** 0.0020	**0.080** 0.0031	**0.110** 0.0043	**0.145** 0.0057	**0.180** 0.0071
80 3.1496	**100** 3.9370	**0.035** 0.0014	**0.060** 0.0024	**0.100** 0.0039	**0.135** 0.0053	**0.180** 0.0071	**0.225** 0.0089
100 3.9370	**120** 4.7244	**0.040** 0.0016	**0.075** 0.0030	**0.120** 0.0047	**0.160** 0.0063	**0.210** 0.0083	**0.260** 0.0102
120 4.7244	**140** 5.5118	**0.050** 0.0020	**0.095** 0.0037	**0.145** 0.0057	**0.190** 0.0075	**0.240** 0.0094	**0.300** 0.0118
140 5.5118	**160** 6.2992	**0.060** 0.0024	**0.110** 0.0043	**0.170** 0.0067	**0.220** 0.0087	**0.280** 0.0110	**0.350** 0.0138
160 6.2992	**180** 7.0866	**0.065** 0.0026	**0.120** 0.0047	**0.180** 0.0071	**0.240** 0.0094	**0.310** 0.0122	**0.390** 0.0154
180 7.0866	**200** 7.8740	**0.070** 0.0028	**0.130** 0.0051	**0.200** 0.0079	**0.260** 0.0102	**0.340** 0.0134	**0.430** 0.0169
200 7.8740	**225** 8.8582	**0.080** 0.0031	**0.140** 0.0055	**0.220** 0.0087	**0.290** 0.0114	**0.380** 0.0150	**0.470** 0.0185
225 8.8582	**250** 9.8425	**0.090** 0.0035	**0.150** 0.0059	**0.240** 0.0094	**0.320** 0.0126	**0.420** 0.0165	**0.520** 0.0205
250 9.8425	**280** 11.0236	**0.100** 0.0039	**0.170** 0.0067	**0.260** 0.0102	**0.350** 0.0138	**0.460** 0.0181	**0.570** 0.0224
280 11.0236	**315** 12.4016	**0.110** 0.0043	**0.190** 0.0075	**0.280** 0.0110	**0.370** 0.0146	**0.500** 0.0197	**0.630** 0.0248
315 12.4016	**355** 13.9764	**0.120** 0.0047	**0.200** 0.0079	**0.310** 0.0122	**0.410** 0.0161	**0.550** 0.0217	**0.690** 0.0272
355 13.9764	**400** 15.7480	**0.130** 0.0051	**0.220** 0.0087	**0.340** 0.0134	**0.450** 0.0177	**0.600** 0.0236	**0.750** 0.0295
400 15.7480	**450** 17.7165	**0.140** 0.0055	**0.240** 0.0094	**0.370** 0.0146	**0.500** 0.0197	**0.660** 0.026	**0.820** 0.0323
450 17.7165	**500** 19.6850	**0.140** 0.0055	**0.260** 0.0102	**0.410** 0.0161	**0.550** 0.0217	**0.720** 0.0283	**0.900** 0.0354
500 19.6850	**560** 22.0472	**0.150** 0.0059	**0.280** 0.0110	**0.440** 0.0173	**0.600** 0.0236	**0.780** 0.0307	**1.000** 0.0394
560 22.0472	**630** 24.8031	**0.170** 0.0067	**0.310** 0.0122	**0.480** 0.0189	**0.650** 0.0256	**0.850** 0.0335	**1.100** 0.0433
630 24.8031	**710** 27.9528	**0.190** 0.0075	**0.350** 0.0138	**0.530** 0.0209	**0.700** 0.0276	**0.920** 0.0362	**1.190** 0.0469
710 27.9528	**800** 31.4961	**0.210** 0.0083	**0.390** 0.0154	**0.580** 0.0228	**0.770** 0.0303	**1.010** 0.0398	**1.300** 0.0512
800 31.4961	**900** 35.4331	**0.230** 0.0091	**0.430** 0.0169	**0.650** 0.0256	**0.860** 0.0339	**1.120** 0.0441	**1.440** 0.0567
900 35.4331	**1000** 39.3701	**0.260** 0.0102	**0.480** 0.0189	**0.710** 0.0280	**0.930** 0.0366	**1.220** 0.0480	**1.570** 0.0618
1000 39.3701	**1120** 44.0950	**0.290** 0.0114	**0.530** 0.0209	**0.780** 0.0307	**1.020** 0.0402	**1.330** 0.0524	**1.720** 0.0677
1120 44.0950	**1250** 49.2130	**0.320** 0.0126	**0.580** 0.0228	**0.860** 0.0339	**1.120** 0.0441	**1.460** 0.0575	**1.870** 0.0736

TABLE 5. RADIAL INTERNAL CLEARANCE LIMITS – SPHERICAL ROLLER BEARINGS – TAPERED BORE

Bore (Nominal)		Radial Internal Clearance Prior To Mounting						Suggested Reduction of RIC Due to Installation		Axial Displacement of Inner Ring for RIC Reduction – Tapered Shaft[1][2]				Minimum Permissible RIC After Installation[1]		
			Normal CO		C4					1:12 Taper		1:30 Taper				
		C2		C3		C5										
Over	Incl.	Min.	Max.	Min.	Max.	Min.	Max.	Min.	Max.	Min.	Max.	Min.	Max.	CO	C3	C4
mm in.	mm in.	mm in.	mm in.	mm in.	mm in.	mm in.	mm in.	mm in.	mm in.	mm in.	mm in.	mm in.	mm in.	mm in.	mm in.	mm in.
20	**30**	**0.020**	**0.030**	**0.040**	**0.055**	**0.075**	**0.095**	**0.015**	**0.020**	**0.230**	**0.300**	**–**	**–**	**0.015**	**0.025**	**0.040**
0.9449	1.1811	0.0008	0.0012	0.0016	0.0022	0.0030	0.0037	0.0006	0.0008	0.0091	0.0118	–	–	0.0006	0.0010	0.0016
30	**40**	**0.025**	**0.035**	**0.050**	**0.065**	**0.085**	**0.105**	**0.020**	**0.025**	**0.300**	**0.380**	**–**	**–**	**0.015**	**0.025**	**0.040**
1.1811	1.5748	0.0010	0.0014	0.0020	0.0026	0.0033	0.0041	0.0008	0.0010	0.0118	0.0150	–	–	0.0006	0.0010	0.0016
40	**50**	**0.030**	**0.045**	**0.060**	**0.080**	**0.100**	**0.130**	**0.025**	**0.030**	**0.380**	**0.460**	**–**	**–**	**0.02**	**0.030**	**0.050**
1.5748	1.9685	0.0012	0.0018	0.0024	0.0031	0.0039	0.0051	0.0010	0.0012	0.0150	0.0181	–	–	0.0008	0.0012	0.0020
50	**65**	**0.040**	**0.055**	**0.075**	**0.095**	**0.120**	**0.160**	**0.030**	**0.038**	**0.460**	**0.560**	**–**	**–**	**0.025**	**0.040**	**0.060**
1.9685	2.5591	0.0016	0.0022	0.0030	0.0037	0.0047	0.0063	0.0012	0.0015	0.0181	0.0220	–	–	0.0010	0.0015	0.0025
65	**80**	**0.050**	**0.070**	**0.0950**	**0.120**	**0.150**	**0.200**	**0.038**	**0.051**	**0.560**	**0.760**	**–**	**–**	**0.025**	**0.045**	**0.075**
2.5591	3.1496	0.0020	0.0028	0.0037	0.0047	0.0059	0.0079	0.0015	0.0020	0.0220	0.0299	–	–	0.0010	0.0017	0.0030
80	**100**	**0.055**	**0.080**	**0.110**	**0.140**	**0.180**	**0.230**	**0.046**	**0.064**	**0.680**	**0.970**	**–**	**–**	**0.036**	**0.050**	**0.075**
3.1496	3.9370	0.0022	0.0030	0.0043	0.0055	0.0071	0.0091	0.0018	0.0025	0.0268	0.0382	–	–	0.0014	0.0020	0.0030
100	**120**	**0.065**	**0.100**	**0.135**	**0.170**	**0.220**	**0.280**	**0.051**	**0.071**	**0.760**	**1.070**	**1.900**	**2.540**	**0.051**	**0.060**	**0.100**
3.9370	4.7244	0.0026	0.0039	0.0053	0.0067	0.0087	0.0110	0.0020	0.0028	0.0299	0.0421	0.0748	0.1000	0.0020	0.0025	0.0040
120	**140**	**0.080**	**0.120**	**0.160**	**0.200**	**0.260**	**0.330**	**0.064**	**0.089**	**0.890**	**1.270**	**2.290**	**3.050**	**0.056**	**0.075**	**0.115**
4.7244	5.5118	0.0031	0.0047	0.0063	0.0079	0.0102	0.0130	0.0025	0.0035	0.0350	0.0500	0.0902	0.1201	0.0022	0.0030	0.0045
140	**160**	**0.090**	**0.130**	**0.180**	**0.230**	**0.300**	**0.380**	**0.076**	**0.102**	**1.140**	**1.520**	**2.670**	**3.430**	**0.056**	**0.075**	**0.125**
5.5118	6.2992	0.0035	0.0051	0.0071	0.0091	0.0118	0.0150	0.0030	0.0040	0.0449	0.0598	0.1051	0.1350	0.0022	0.0030	0.0050
160	**180**	**0.100**	**0.140**	**0.200**	**0.260**	**0.340**	**0.430**	**0.076**	**0.114**	**1.140**	**1.650**	**2.670**	**4.060**	**0.061**	**0.090**	**0.150**
6.2992	7.0866	0.0039	0.0055	0.0079	0.0102	0.0134	0.0169	0.0030	0.0045	0.0449	0.0650	0.1051	0.1598	0.0024	0.0035	0.0060
180	**200**	**0.110**	**0.160**	**0.220**	**0.290**	**0.370**	**0.470**	**0.089**	**0.127**	**1.400**	**1.900**	**3.050**	**4.450**	**0.071**	**0.100**	**0.165**
7.0866	7.8740	0.0043	0.0063	0.0087	0.0114	0.0146	0.0185	0.0035	0.0050	0.0551	0.0748	0.1201	0.1752	0.0028	0.0040	0.0065
200	**225**	**0.120**	**0.180**	**0.250**	**0.320**	**0.410**	**0.520**	**0.102**	**0.140**	**1.520**	**2.030**	**3.560**	**4.830**	**0.076**	**0.115**	**0.180**
7.8740	8.8582	0.0047	0.0071	0.0098	0.0126	0.0161	0.0205	0.0040	0.0055	0.0598	0.0799	0.1402	0.1902	0.0030	0.0045	0.0070
225	**250**	**0.140**	**0.200**	**0.270**	**0.350**	**0.450**	**0.570**	**0.114**	**0.152**	**1.780**	**2.290**	**4.060**	**5.330**	**0.089**	**0.115**	**0.200**
8.8582	9.8425	0.0055	0.0079	0.0106	0.0138	0.0177	0.0224	0.0045	0.0060	0.0701	0.0902	0.1598	0.2098	0.0035	0.0045	0.0080
250	**280**	**0.150**	**0.220**	**0.300**	**0.390**	**0.490**	**0.620**	**0.114**	**0.165**	**1.780**	**2.540**	**4.060**	**5.840**	**0.102**	**0.140**	**0.230**
9.8425	11.0236	0.0059	0.0087	0.0118	0.0154	0.0193	0.0244	0.0045	0.0065	0.0701	0.1000	0.1598	0.2299	0.0040	0.0055	0.0090
280	**315**	**0.170**	**0.240**	**0.330**	**0.430**	**0.540**	**0.680**	**0.127**	**0.178**	**1.900**	**2.670**	**4.450**	**6.220**	**0.102**	**0.150**	**0.250**
11.0236	12.4016	0.0067	0.0094	0.0130	0.0169	0.0213	0.0268	0.0050	0.0070	0.0748	0.1051	0.1752	0.2449	0.0040	0.0060	0.0100
315	**355**	**0.190**	**0.270**	**0.360**	**0.470**	**0.590**	**0.740**	**0.140**	**0.190**	**2.030**	**2.790**	**4.830**	**6.600**	**0.114**	**0.165**	**0.280**
12.4016	13.9764	0.0075	0.0106	0.0142	0.0185	0.0232	0.0291	0.0055	0.0075	0.0799	0.1098	0.1902	0.2598	0.0045	0.0065	0.0110
355	**400**	**0.210**	**0.300**	**0.400**	**0.520**	**0.650**	**0.820**	**0.152**	**0.203**	**2.290**	**3.050**	**5.330**	**7.110**	**0.127**	**0.190**	**0.330**
13.9764	15.7480	0.0083	0.0118	0.0157	0.0205	0.0256	0.0323	0.0060	0.0080	0.0902	0.1201	0.2098	0.2799	0.0050	0.0075	0.0130
400	**450**	**0.230**	**0.330**	**0.440**	**0.570**	**0.720**	**0.910**	**0.165**	**0.216**	**2.540**	**3.300**	**5.840**	**7.620**	**0.152**	**0.230**	**0.360**
15.7480	17.7165	0.0091	0.0130	0.0173	0.0224	0.0283	0.0358	0.0065	0.0085	0.1000	0.1299	0.2299	0.3000	0.0060	0.0090	0.0140
450	**500**	**0.260**	**0.370**	**0.490**	**0.630**	**0.790**	**1.000**	**0.178**	**0.229**	**2.670**	**3.430**	**6.220**	**8.000**	**0.165**	**0.270**	**0.410**
17.7165	19.6850	0.0102	0.0146	0.0193	0.0248	0.0311	0.0394	0.0070	0.0090	0.1051	0.1350	0.2449	0.3150	0.0065	0.0105	0.0160
500	**560**	**0.290**	**0.410**	**0.540**	**0.680**	**0.870**	**1.100**	**0.203**	**0.254**	**3.050**	**3.810**	**7.110**	**8.890**	**0.178**	**0.290**	**0.440**
19.6850	22.0472	0.0114	0.0161	0.0213	0.0268	0.0343	0.0433	0.0080	0.0100	0.1201	0.1500	0.2799	0.3500	0.0070	0.0115	0.0175
560	**630**	**0.320**	**0.460**	**0.600**	**0.760**	**0.980**	**1.230**	**0.229**	**0.279**	**3.430**	**4.190**	**8.000**	**9.780**	**0.203**	**0.320**	**0.510**
22.0472	24.8031	0.0126	0.0181	0.0236	0.0299	0.0386	0.0484	0.0090	0.0110	0.1350	0.1650	0.3150	0.3850	0.0080	0.0125	0.0200
630	**710**	**0.350**	**0.510**	**0.670**	**0.850**	**1.090**	**1.360**	**0.254**	**0.305**	**3.810**	**4.570**	**8.890**	**10.670**	**0.203**	**0.370**	**0.550**
24.8031	27.9528	0.0138	0.0201	0.0264	0.0335	0.0429	0.0535	0.0100	0.0120	0.1500	0.1799	0.3500	0.4201	0.0080	0.0145	0.0215
710	**800**	**0.390**	**0.570**	**0.750**	**0.960**	**1.220**	**1.500**	**0.279**	**0.356**	**4.190**	**5.330**	**9.780**	**12.450**	**0.229**	**0.390**	**0.610**
27.9528	31.4961	0.0154	0.0224	0.0295	0.0378	0.0480	0.0591	0.0110	0.0140	0.1650	0.2098	0.3850	0.4902	0.0090	0.0155	0.0240
800	**900**	**0.440**	**0.640**	**0.840**	**1.070**	**1.370**	**1.690**	**0.305**	**0.381**	**4.570**	**5.720**	**10.670**	**13.330**	**0.252**	**0.460**	**0.690**
31.4961	35.4331	0.0173	0.0252	0.0331	0.0421	0.0539	0.0665	0.0120	0.0150	0.1799	0.2252	0.4201	0.5248	0.0100	0.0180	0.0270
900	**1000**	**0.490**	**0.710**	**0.930**	**1.190**	**1.520**	**1.860**	**0.356**	**0.432**	**5.330**	**6.480**	**12.450**	**15.110**	**0.279**	**0.490**	**0.750**
35.4331	39.3701	0.0193	0.0280	0.0366	0.0469	0.0598	0.0732	0.0140	0.0170	0.2100	0.2551	0.4902	0.5949	0.0110	0.0195	0.0300
1000	**1120**	**0.530**	**0.770**	**1.030**	**1.300**	**1.670**	**2.050**	**0.400**	**0.480**	**6.100**	**7.240**	**14.220**	**16.890**	**0.280**	**0.550**	**0.810**
39.3701	44.0950	0.0209	0.0303	0.0406	0.0512	0.0657	0.0807	0.0160	0.0190	0.2400	0.2850	0.5600	0.6650	0.0110	0.0215	0.0320
1120	**1250**	**0.570**	**0.830**	**1.120**	**1.420**	**1.830**	**2.250**	**0.430**	**0.500**	**6.480**	**7.620**	**15.110**	**17.780**	**0.330**	**0.610**	**0.910**
44.0950	49.2130	0.0224	0.0327	0.0441	0.0559	0.0720	0.0886	0.0170	0.0200	0.2550	0.3000	0.5950	0.7000	0.0130	0.0240	0.0360

Note: Axial displacement values apply to solid steel shafts or hollow shafts with bore diameter less than half the shaft diameter. For shaft materials other than steel, or for thin-walled shafts, please consult your Timken sales engineer.

[1]This displacement is valid for assembly of tapered bore bearings and is measured starting from a line-to-line fit of the bearing bore to the tapered shaft.

[2]1:12 Taper used for 213, 222, 223, 230, 231, 232, 233, 238, 239 series. 1:30 Taper used for 240, 241, 242 series. For sleeve mounting, multiply axial displacement values by 1.1 for 1:12 Taper or by 1.05 for 1:30 Taper. For questions on tapered shaft data, consult your Timken sales engineer.

EXAMPLE #1 –
Calculating RIC Reduction Using a Spherical Roller Bearing with Tapered Bore

Step 1:
Place bearing in upright position and center the inner ring and rollers. Apply pressure to the inner ring and oscillate several times to properly seat the rollers.

Step 2:
Use a feeler gauge to measure the unmounted radial internal clearance (RIC) for both bearing rows.

- RIC must be checked at the unloaded roller.
- Feeler gauge must cover the length of the roller.
- Unmounted RIC is the thickest gauge that will slide through the gap between the roller and outer ring.
- Unmounted RIC is then the average reading for the two rows.

Fig. 14. Measure RIC before installation.

Example: 22328KEJW33C3 140 mm bore (5.5118 in.)
RIC measurement is 0.178 mm (0.0070 in.)

Step 3:
Use table 5 (page 24) to confirm that the measured unmounted RIC value is within specification.

Example: 22328KEJW33C3 140 mm bore (5.5118 in.)
RIC range is 0.160 mm – 0.200 mm (0.0063 in. – 0.0079 in.), the example's measured RIC is 0.178 mm (0.007 in.) so it is within specified range.

Step 4:
Use table 5 (page 24) to determine the Suggested Reduction of RIC Due to Installation.

Example: 22328KEJW33C3 140 mm bore (5.5118 in.)
Suggested Reduction of RIC Due to installation is 0.064 mm – 0.089 mm (0.0025 in. – 0.0035 in.).

Step 5:
Determine the maximum and minimum RIC after mounting.

MAX RIC = actual unmounted RIC – maximum suggested reduction in RIC

MIN RIC = actual unmounted RIC – maximum suggested reduction in RIC

Example: 22328KEJW33C3 140 mm bore (5.5118 in.)

Max Mounted RIC: 0.178 mm – 0.064 mm = 0.114 mm (0.0070 in. – 0.0025 in. = 0.0045 in.)

Min Mounted RIC: 0.178 mm – 0.089 mm = 0.089 mm (0.0070 in. – 0.0035 in. = 0.0035 in.)

Step 6:
Use table 5 (page 24) to determine Axial Displacement of Inner Ring for RIC Reduction.

Example: 22328KEJW33C3 140 mm bore (5.5118 in.)

22328KEJW33C3 is a 223 series which has a 1:12 tapered bore.

Axial Displacement of Inner Ring for RIC Reduction is 0.890 mm – 1.270 mm (0.035 in. – 0.050 in.).

Step 7:
Place bearing on tapered shaft (or tapered sleeve) until line-to-line contact exists with the bearing bore.

Fig. 15. During mounting, the RIC should be checked at the unloaded roller.

Step 8:
Use a locknut (or hydraulic nut) to apply installation force and move the bearing up the shaft or tapered sleeve until the mounted RIC reaches the desired range established in Step 5. During mounting, RIC should be measured at unloaded roller.

Example: 22328KEJW33C3 140 mm bore (5.5118 in.)
Mounted RIC range is 0.089 mm – 0.114 mm (0.0035 in. – 0.0045 in.).

Step 9:
Use table 5 (page 24) to evaluate mounted RIC against Minimum Permissible RIC After Installation.

Example: 22328KEJW33C3 140 mm bore (5.5118 in.)
The minimum permissible RIC after mounting would be 0.075 mm (0.0030 in.).

Step 7 (Alternative Procedure):
Use a locknut (or hydraulic nut) to apply installation force and move the bearing up the shaft or tapered sleeve until the axial displacement of the inner ring reaches the desired range. During mounting, the axial displacement of the inner ring should be measured.

Example: 22328KEJW33C3 140 mm bore (5.5118 in.)
Axial Displacement of Inner Ring for RIC Reduction is 0.890 mm – 1.270 mm (0.035 in. – 0.050 in.).

EXAMPLE #2 –
Calculating RIC Reduction Using a Spherical Roller Bearing with Cylindrical Bore

Step 1:
Gather general information required for fitting practice review.

- Bearing Bore and OD Dimensions/Tolerances
- Bearing operating conditions (Load/Speed)

Calculate bearing loading to bearing rating ratio by dividing the expected radial load by the basic dynamic radial load rating (BDLR) of the bearing.

Example: 22230EMW33

- Bore: 149.975 mm -150.00 mm (5.9045 in. – 5.9055 in.)
- OD: 269.965 mm – 270.00 mm (10.6285 in. – 10.6299 in.)
- BDLR: 1000 KN (225,000 lbf)
- Speed: 1,200 RPM; rotating shaft
- Radial Loading: 90 KN (20,250 lbf)
- Lubrication: grease
- Load/Bearing Rating Ratio:
  90 KN/1000 KN (20,250 lbf/225,000 lbf) = 0.09
  P= 0.09

Step 2:
Determine which shaft and housing fits should be used.

- Using table 6 (page 30) determine the suggested fits for the inner ring on the shaft.
- Using table 7 (page 31) determine the suggested fits for the outer ring in the housing.

Example: 22230EMW33

Inner Ring/Shaft: 150 mm (5.9055 in.)

- Rotating inner ring
- *Normal/light loads applied*
- *ISO fit – p6 suggested*

Outer Ring: 270 mm OD (10.6299 in.)

- Solid, one piece housing
- Normal/light loads applied
- ISO fit – H8 suggested

Step 3:
Determine the shaft OD and housing bore dimensions/tolerances.

- Using tables 9 and 10 (pages 32-37) determine the suggested shaft diameter dimensions
- Using table 11 and 12 (pages 38-45) determine the suggested housing bore dimension

Example: 22230EMW33

Shaft dimensions: p6 fit selected

Shaft tolerance: +0.043 mm/+0.068 mm
(+0.0017 in./+0.0027 in.)

Shaft diameter: 150.043 mm – 150.068 mm
(5.9072 in. – 5.9082 in.)

Housing Dimensions: H8 fit selected

Housing tolerance: +0.000 mm/+0.081 mm
(+0.0000 in./+0.0032 in.)

Housing diameter: 270.000 mm – 270.081 mm
(10.6299 in. – 10.6331 in.)

Step 4:
Calculate the resultant fits on the shaft and in the housing.

- Calculate the maximum and minimum interference fit on the shaft.
- Calculate the maximum and minimum interference fit in the housing.
- Note: Negative resultant fits are tight fit interference.
- Note: Positive resultant fits are loose fit interferences.

Example: 22230EMW33

Shaft Fit:

Max interference = min bore – max shaft OD 149.975 mm – 150.068 mm = -0.093 mm (tight fit) **OR**
5.9045 in. – 5.9082 in. = -0.0037 in. (tight fit)

Min interference = max bore – min shaft OD 150.000 mm – 150.043 mm = -0.043 mm (tight fit) **OR**
5.9055 in. – 5.9072 in. = -0.0017 in. (tight fit)

Housing Fit:

Max interference = min housing bore – max bearing OD
270.000 mm – 270.000 mm = 0.000 mm (loose) **OR**
10.6299 in. – 10.6299 in. = 0.0000 in. (loose)

Min interference = max housing bore – min bearing OD
270.081 mm – 269.965 mm = +0.116 mm (loose) **OR**
10.6331 in. – 10.6285 in. = +0.0046 in. (loose)

Step 5:

Calculate the RIC reduction due to fits.

- RIC reduction due to tight fit on the shaft = approx. 80% of the fit
- RIC reduction due to tight fit on the housing = approx. 60% of the fit

Example: 22230EMW33

RIC reduction due to tight fit on shaft:

Max RIC reduction: 0.80 x 0.093 mm = 0.074 mm (0.80 x 0.0037 in. = 0.0030 in.)

Min RIC reduction: 0.080 x 0.043 mm = 0.034 mm (0.80 x 0.0017 in. = 0.0014 in.)

RIC reduction is due to loose fit in the housing.
No reduction in RIC is due to loose fit.

Step 6:

Use table 4 (page 23) to determine the unmounted RIC.

Example: 22230EMW33

RIC designation is C0 (normal)
Unmounted RIC: 0.110 mm – 0.170 mm (0.0043 in. – 0.0067 in.)

Step 7:

Calculate the mounted RIC.

- Calculate the max mounted RIC Max unmounted RIC – min RIC fit reduction
- Calculate the min mounted RIC Min unmounted RIC – max RIC fit reduction

Example: 22230EMW33

Max mounted RIC: 0.170 mm – 0.034 mm = 0.136 mm (0.0067 in. – 0.0014 in. = 0.0053 in.)

Min mounted: RIC 0.110 mm – 0.074 mm = 0.036 mm (0.0043 in. – 0.0030 in. = 0.0013 in.)

Step 8:

Use table 4 (page 23) to evaluate the mounted RIC.

Example: 22230EMW33 (which has a C0 RIC)

Min permissible RIC is 0.056 mm (0.0022 in.)

Since min mounted RIC is below min permissible level, C0 fit selection needs to be reevaluated.

Step 9:

Review fitting repeating steps 6-8 using C3 clearance levels.

Example: 22230EMW33C3

Unmounted RIC: 0.170 mm – 0.220 mm (0.0067 in. – 0.0087 in.)

Mounted RIC: 0.096 mm – 0.186 mm (0.0037 in. – 0.0073 in.)

Mounted RIC is greater than min permissible, so C3 fit appears to be acceptable.

Step 10:

Confirm RIC designation selection against operating speeds.

As a general rule of thumb, the RIC level is increased for bearings operating at speeds that exceed 70% of thermal speed rating (page 18).

Example: 22230EMW33C3

From page 74, thermal reference speed: 2,000 rpm

2,000 rpm x 0.7 = 1,400 rpm

Current operating speed of application is 1,200 rpm.

Current C3 clearance designation appears to be acceptable.

INSTALLATION

When using a tight fit inner ring, the method of assembly will depend on whether the bearing has a cylindrical or tapered bore.

CLEANLINESS

- Choose a clean environment, free from dust and moisture.
- The installer should make every effort to ensure cleanliness by use of protective screens and clean cloths.

PLAN THE WORK

- Know your plans in advance and have the necessary tools at hand. This reduces the amount of time for the job and decreases the chance for dirt to get into the bearing.

INSPECTION AND PREPARATION

- All component parts of the machine should be on hand and thoroughly cleaned before proceeding.
- Housings should be cleaned, including blowing out the oil holes.
- Do not use air hose on bearings.
- If blind holes are used, insert a magnetic rod to remove metal chips that might be lodged there during fabrication.
- Shaft shoulders and spacer rings contacting the bearing should be square with the shaft axis.
- The shaft fillet must be small enough to clear the radius of the bearing.
- On original installations, all component parts should be checked against the detail specification prints for dimensional accuracy. Shaft and housing should be carefully checked for size and form (roundness, etc.).

SHAFT AND HOUSING FINISH

- Shaft surfaces on which the bearing will be mounted must be clean and free from nicks and burrs.
- For applications with stationary housing and rotating shaft, it is suggested that the bearing seat on the shaft be ground to 1.6 µm (65 µin.) Ra maximum.
- If it is impractical to use a ground finish, a machined finish of 3.2 µm (125 µin.) Ra is acceptable in many cases, but the amount of interference fit should be slightly increased.
- Housing bores should be finished to 3.2 µm (125 µin) Ra maximum.

Note: *Do not remove the bearing from its wrapping until you are ready to mount it.*

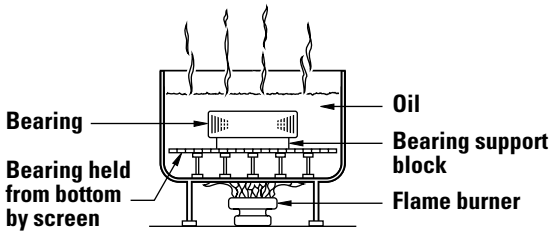

Fig. 16. Heat expansion method.

INSTALLING CYLINDRICAL BORE BEARINGS

Heat expansion method

- Most applications require a tight interference fit on the shaft.
- Mounting is simplified by heating the bearing to expand it sufficiently to slide easily onto the shaft.
- Two methods of heating are commonly used:
  - Tank of heated oil.
  - Induction heating.
- The first is accomplished by heating the bearing in a tank of oil that has a high flash point.
- The oil temperature should not be allowed to exceed 121° C (250° F). A temperature of 93° C (200° F) is sufficient for most applications.
- The bearing should be heated for 20 or 30 minutes, or until it is expanded sufficiently to slide onto the shaft easily.
- The induction heating process can be used for mounting bearings.
- Induction heating is rapid. Care must be taken to prevent bearing temperature from exceeding 93° C (200° F).
- Trial runs with the unit and bearing are usually necessary to obtain proper timing.
- Thermal crayons melted at predetermined temperatures can be used to check the bearing temperature.
- While the bearing is hot, it should be positioned squarely against the shoulder.
- Lockwashers and locknuts or clamping plates are then installed to hold the bearing against the shoulder of the shaft.
- As the bearing cools, the locknut or clamping plate should be tightened.
- In cases of outer ring rotation, where the outer ring is a tight fit in the housing, the housing member can be expanded by heating.
- The oil bath is shown in fig. 16. The bearing should not be in direct contact with the heat source.
- The usual arrangement is to have a screen several inches from the bottom of the tank. Small support blocks separate the bearing from the screen.
- It is important to keep the bearing away from any localized high-heat source that may raise its temperature excessively, resulting in ring hardness reduction.
- Flame-type burners are commonly used. An automatic device for temperature control is desirable.
- If safety regulations prevent the use of an open heated oil bath, a mixture of 15 percent soluble-oil water may be used. This mixture may be heated to a maximum of 93° C (200° F) without being flammable.

Arbor press method

- An alternate method of mounting, generally used only on smaller size bearings, is to press the bearing onto the shaft or into the housing. This can be done by using an arbor press and a mounting tube as shown in fig. 17.
- The tube should be made from soft steel with an inside diameter slightly larger than the shaft.
- The O.D. of the tube should not exceed the shaft backing diameter.
- The tube should be faced square at both ends. It should be thoroughly clean inside and out, and long enough to clear the end of the shaft after the bearing is mounted.
- If the outer ring is being pressed into the housing, the O.D. of the mounting tube should be slightly smaller than the housing bore. The I.D. should not be less than the suggested housing backing diameter in the table of dimensions.
- Coat the shaft with a light machine oil to reduce the force needed for a press fit.
- Carefully place the bearing on the shaft, making sure it is square with the shaft axis.
- Apply steady pressure from the arbor ram to drive the bearing firmly against the shoulder.

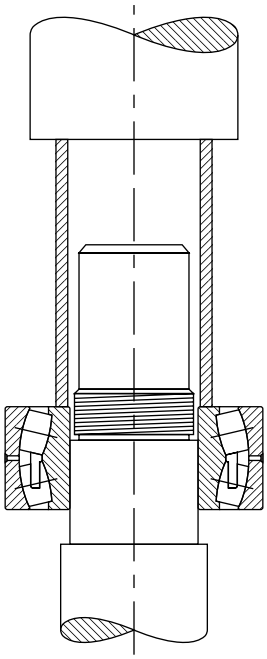

Fig. 17. Arbor press method.

NOTE

Never attempt a press fit on a shaft by applying pressure to the outer ring or a press fit in a housing by applying pressure to the inner ring.

NOTE

Never use steam or hot water when cleaning the bearings because these methods can create rust or corrosion.

NOTE

Never expose any surface of a bearing to the flame of a torch.

NOTE

Do not heat bearing beyond 149° C (300° F).

Mounting tapered bore spherical roller bearings

- Use a feeler gage with the thinnest blade of 0.038 mm (0.0015 inch).
- Place the bearing in an upright position with the inner and outer ring faces parallel.
- Place thumbs on the inner ring bore and oscillate the inner ring the distance of two or three roller spacings.
- Position the individual roller assemblies so that a roller is at the top of the inner ring on both sides of the bearing.
- With the roller in the correct position, insert a thin blade of the feeler gage between the roller and the outer ring.
- Move the feeler gage carefully along the top roller between the roller and outer ring raceway. Repeat this procedure using thicker feeler gage blades until one is found that will not go through.
- The blade thickness that preceded the “no-go” blade is a measure of RIC before installation.
- Start the mounting procedure by lubricating the tapered shaft with a light coat of machine oil.
- Slide the bearing onto the shaft as far as it will go by hand.
- As the locknut is tightened, the interference fit builds up, resulting in expansion of the inner ring.
- Periodically measure to keep track of the reduction in RIC.
- Continue the procedure until the proper amount of reduction is obtained. Do not exceed suggested amount of reduction.
- As a final check, make sure the remaining RIC equals or exceeds the minimum mounted clearance shown in table 5.
- During mounting, the RIC should be checked at the unloaded roller. If this is at the bottom, make sure that the roller is raised to seat firmly at the inboard position of the inner ring.
- When the suggested amount of RIC reduction has been accomplished, the bearing is properly fitted.
- Complete the procedure by peening the lockwasher tang into the locknut slot or securing the lockplate.

Fig. 18. Measure RIC before installation.

SHAFT AND HOUSING FITS

SPHERICAL ROLLER BEARING SHAFT AND HOUSING FITS

This chart is a guideline for specifying shaft and housing fits related to particular operating conditions. Please contact your Timken sales engineer for more information.

TABLE 6. RADIAL SPHERICAL ROLLER BEARING SHAFT FITS

	Conditions	Examples	Shaft Diameter		Tolerance Symbol[1]	Remarks
			mm in.			
Stationary inner ring load	The inner ring to be easily displaced on the shaft	Two-bearing shaft mechanism	See table 8 for shaft size.		s4	See table 8 for shaft size.
	The inner ring not to be easily displaced on the shaft	Wheel on non-rotating shaft	All diameters		g6	
		Tension pulleys and rope sheaves			h6	
Rotating inner ring load or indeterminate load direction	Light and variable loads P ≤ 0.07C	Electrical apparatus, machine tools, pumps, ventilators, industrial trucks	over	incl.	k6	In very accurate applications, k5 and m5 are used instead of k6 and m6 respectively.
			18 0.7087	**100** 3.9370		
			100 3.9370	**200** 7.8740	m6	
	Normal and heavy loads P > 0.07C ≤ 0.25C	Applications in general, electrical motors, turbines, pumps, combustion engines, gear transmissions, woodworking machines	**18** 0.7087	**65** 2.5590	m5	
			65 2.5590	**100** 3.9370	m6	
			100 3.9370	**140** 5.5118	n6	
			140 5.5118	**280** 11.0236	p6	
			280 11.0236	**500** 19.6850	r6	
			500 19.6850	**and up**	r7	
	Very heavy loads and shock loads P > 0.25C	Journal boxes for locomotives and other heavy rail vehicles, traction motors	**18** 0.7087	**65** 2.5590	m6	Bearings with greater clearance than normal must be used.
			65 2.5590	**100** 3.9370	n6	
			100 3.9370	**140** 5.5118	p6	
			140 5.5118	**200** 7.8740	r6	
			200 7.8740	**500** 19.6850	r7	
BEARINGS WITH TAPERED BORE AND ADAPTER SLEEVE						
	All loads	Applications in general	All diameters			See tables for Reduction of RIC on pages 19-20.

[1]For solid steel shaft. See tables on pages 32-37 for tolerance value.

TABLE 7. SPHERICAL ROLLER BEARING HOUSING FITS

Conditions			Examples	Tolerance Symbol[1]	Remarks
One-piece bearing housing	Rotating outer ring load	Variable load direction	Two-bearing eccentric shaft mechanism	P6	The outer ring is not displaceable axially.
		Heavy loads on bearings in thin-walled housings	Supporting wheels in cranes, wheel hubs, crank bearings	P7	
		Normal and heavy loads	Wheel hubs, crank bearings	N7	
		Light and variable loads	Conveyor rollers, rope sheaves, tension pulleys	M7	
	Indeterminate load direction	Heavy shock loads	Electrical traction motors		
		Heavy and normal loads, axial displacement of the outer ring not required	Electrical motors, pumps, crankshaft main bearings	K7	The outer ring is, as a rule, not displaceable axially.
		Normal and light loads, axial displacement of the outer ring is desirable	Electrical motors, pumps, crankshaft main bearings	J7	The outer ring is, as a rule, displaceable axially.
Split or one-piece bearing housing	Stationary outer ring load	Shock loads, temporarily complete unloading	Journal boxes for rail vehicles		
		All loads	Bearing applications in general, journal boxes for rail vehicles	H7	The outer ring is easily displaced axially.
		Normal and light loads, loads under simple operating conditions	Line shaftings	H8	
		Heat supplied through the shaft	Dryer cylinders	G7	
One-piece bearing housing	Applications requiring particular accuracy	Very accurate running and small deflections under variable loads	For main spindles in machine tools: O.D. less than 125 mm; O.D. 125 to 250 mm; O.D. over 250 mm	M6 N6 P6	The outer ring is not displaceable axially.
		Very accurate running under light loads and indeterminate load direction	Held bearings in high-speed centrifugal force compressors	K6	The outer ring is, as a rule, not displaceable axially.
		Very accurate running, axial displacement of outer ring desirable	Floating bearings in high-speed centrifugal force compressors	J6	The outer ring is easily displaced axially.

[1]Cast iron or steel housing. For tolerance values see tables on pages 38-45. For housings of light metal, tolerances generally are selected that give a slightly tighter fit than those given in the table.

s4 Fits

A centrifugal force load produces a rotating outer ring load and a stationary inner ring load, even though the inner ring rotates. This makes it desirable to fit the outer ring tight in the housing (using a P6 fit as shown in table 12), and the inner ring loose on the shaft using an s4 fit as listed in table 8. The standard W33 bearing with oil grooves and oil holes can be used.

The s4 fit designation as referenced on this page is a special fit tolerance developed by The Timken Company for centrifugal force load applications. It DOES NOT conform to ISO standards similarly published as s4 preferred shaft fits.

TABLE 8. s4 FITS

See Dimensional Tables for Nominal Bore.					
Bore		Variance From Nominal Bore			
		Tolerance[1]	Shaft Diameter		Fit
Over	Incl.		Max.	Min.	
mm in.	**mm** in.	**mm** in.	**mm** in.	**mm** in.	**mm** in.
50.000 1.9685	**80.000** 3.1496	**-0.015** -0.0006	**-0.025** -0.0010	**-0.036** -0.0014	**0.010L** **0.036L** 0.0004L 0.0014L
80.000 3.4196	**120.000** 4.7244	**-0.020** -0.0008	**-0.033** -0.0013	**-0.043** -0.0017	**0.013L** **0.043L** 0.0005L 0.0017L
120.000 4.7244	**180.000** 7.0866	**-0.025** -0.0010	**-0.041** -0.0016	**-0.053** -0.0021	**0.015L** **0.053L** 0.0006L 0.0021L
180.000 7.0866	**250.000** 9.8425	**-0.030** -0.0012	**-0.048** -0.0019	**-0.064** -0.0025	**0.018L** **0.064L** 0.0007L 0.0025L

[1]Tolerance range is from +0 to value listed.

These charts are guidelines for specifying shaft and housing fits related to particular operating conditions found in table 6 on page 30.

SPHERICAL ROLLER BEARING SHAFT TOLERANCES

TABLE 9. SPHERICAL ROLLER BEARINGS – SHAFT TOLERANCES

Bearing Bore			g6			h6			h5			j5		
Nominal (Max.)		Tolerance[1]	Shaft Diameter		Fit	Shaft Diameter		Fit	Shaft Diameter		Fit	Shaft Diameter		Fit
Over	Incl.		Max.	Min.		Max.	Min.		Max.	Min.		Max.	Min.	
mm in.	**mm** in.	**mm** in.	**mm** in.	**mm** in.	**mm** in.	**mm** in.	**mm** in.	**mm** in.	**mm** in.	**mm** in.	**mm** in.	**mm** in.	**mm** in.	**mm** in.
3.000 0.1181	**6.000** 0.2362	**-0.008** -0.003	**-0.004** -0.0002	**-0.012** -0.0005	**0.012L 0.004T** 0.0005L 0.0001T	**0.000** 0.0000	**-0.008** -0.003	**0.008L 0.008T** 0.0003L 0.0003T	**0.000** 0.0000	**-0.005** -0.0002	**0.005L 0.008T** 0.0002L 0.0003T	**+0.003** +0.0001	**-0.002** -0.0001	**0.002L 0.011T** 0.0001L 0.0004T
6.000 0.2362	**10.000** 0.3937	**-0.008** -0.003	**-0.005** -0.0002	**-0.014** -0.0006	**0.014L 0.003T** 0.0006L 0.0001T	**0.000** 0.0000	**-0.009** -0.0004	**0.009L 0.008T** 0.0004L 0.0003T	**0.000** 0.0000	**-0.006** -0.0002	**0.006L 0.008T** 0.0002L 0.0003T	**+0.004** +0.0002	**-0.002** -0.0001	**0.002L 0.012T** 0.0001L -0.0005T
10.000 0.3937	**18.000** 0.7087	**-0.008** -0.003	**-0.006** -0.0002	**-0.017** -0.0007	**0.017L 0.002T** 0.0007L -0.0001T	**0.000** 0.0000	**-0.011** -0.0004	**0.011L 0.008T** 0.0004L 0.0003T	**0.000** 0.0000	**-0.008** -0.0003	**0.008L 0.008T** 0.0003L 0.0003T	**+0.005** +0.0002	**-0.003** -0.0001	**0.003L 0.013T** 0.0001L 0.0005T
18.000 0.7087	**30.000** 1.1811	**-0.010** -0.0004	**-0.007** -0.0003	**-0.020** -0.0008	**0.020L 0.003T** 0.0008L 0.0001T	**0.000** 0.0000	**-0.013** -0.0005	**0.013L 0.010T** 0.0005L 0.0004T	–	–	–	**+0.005** +0.0002	**-0.004** -0.0002	**0.004L 0.015T** 0.0002L 0.0006T
30.000 1.1811	**50.000** 1.9685	**-0.012** -0.0005	**-0.009** -0.0004	**-0.025** -0.0010	**0.025L 0.003T** 0.0010L 0.0001T	**0.000** 0.0000	**-0.016** -0.0006	**0.016L 0.012T** 0.0006L 0.0005T	–	–	–	**+0.006** +0.0002	**-0.005** -0.0002	**0.005L 0.018T** 0.0002L 0.0007T
50.000 1.9685	**80.000** 3.1496	**-0.015** -0.0006	**-0.010** -0.0004	**-0.029** -0.0011	**0.029L 0.005T** 0.0011L 0.0002T	**0.000** 0.0000	**-0.019** -0.0007	**0.019L 0.015T** 0.0007L 0.0006T	–	–	–	**+0.006** +0.0002	**-0.007** -0.0003	**0.007L 0.021T** 0.0003L 0.0008T
80.000 3.1496	**120.000** 4.7244	**-0.020** -0.0008	**-0.012** -0.0005	**-0.034** -0.0013	**0.034L 0.008T** 0.0013L 0.0003T	**0.000** 0.0000	**-0.022** -0.0009	**0.022L 0.020T** 0.0009L 0.0008T	–	–	–	**+0.006** +0.0002	**-0.009** -0.0004	**0.009L 0.026T** 0.0004L 0.0010T
120.000 4.7244	**180.000** 7.0866	**-0.025** -0.0010	**-0.014** -0.0006	**-0.039** -0.0015	**0.039L 0.011T** 0.0015L 0.0004T	**0.000** 0.0000	**-0.025** -0.0010	**0.025L 0.025T** 0.0010L 0.0010T	–	–	–	**+0.007** +0.0003	**-0.011** -0.0004	**0.011L 0.032T** 0.0004L 0.0013T
180.000 7.0866	**200.000** 7.8740	**-0.030** -0.0012	**-0.015** -0.0006	**-0.044** -0.0017	**0.044T 0.015T** 0.0017L 0.0006T	**0.000** 0.0000	**-0.029** -0.0011	**0.029L 0.030T** 0.0011L 0.0012T	–	–	–	**+0.007** +0.0003	**-0.013** -0.0005	**0.013L 0.037T** 0.0005L 0.0015T
200.000 7.8740	**225.000** 8.8583	**-0.030** -0.0012	**-0.015** -0.0006	**-0.044** -0.0017	**0.044T 0.015T** 0.0017L 0.0006T	**0.000** 0.0000	**-0.029** -0.0011	**0.029L 0.030T** 0.0011L 0.0012T	–	–	–	**+0.007** +0.0003	**-0.013** -0.0005	**0.013L 0.037T** 0.0005L 0.0015T
225.000 8.8583	**250.000** 9.8425	**-0.030** -0.0012	**-0.015** -0.0006	**-0.044** -0.0017	**0.044T 0.015T** 0.0017L 0.0006T	**0.000** 0.0000	**-0.029** -0.0011	**0.029L 0.030T** 0.0011L 0.0012T	–	–	–	**+0.007** +0.0003	**-0.013** -0.0005	**0.013L 0.037T** 0.0005L 0.0015T
250.000 9.8425	**280.000** 11.0236	**-0.035** -0.0014	**-0.017** -0.0007	**-0.049** -0.0019	**0.049L 0.018T** 0.0019L 0.0007T	**0.000** 0.0000	**-0.032** -0.0013	**0.032L 0.035T** 0.0013L 0.0014T	–	–	–	**+0.007** +0.0003	**-0.016** -0.0006	**0.016L 0.042T** 0.0006L 0.0017T

NOTE: Tolerance and shaft diameters are shown in the table as variances from nominal bearing bore.

[1]Tolerance range is from +0 to value listed.

These charts are guidelines for specifying shaft and housing fits related to particular operating conditions found in table 6 on page 30.

j6			k5			k6			m5		
Shaft Diameter		Fit	Shaft Diameter		Fit	Shaft Diameter		Fit	Shaft Diameter		Fit
Max.	Min.		Max.	Min.		Max.	Min.		Max.	Min.	
mm in.	**mm** in.	**mm** in.	**mm** in.	**mm** in.	**mm** in.	**mm** in.	**mm** in.	**mm** in.	**mm** in.	**mm** in.	**mm** in.
+0.006 +0.0002	**-0.002** -0.0001	**0.002L** **0.014T** 0.0001L 0.0005T	**+0.006** +0.0002	**+0.001** +0.0000	**0.001T** **0.014T** 0.0000T 0.0005T	–	–	–	**+0.009** +0.0004	**+0.004** +0.0002	**0.004T** **0.017T** 0.0002T 0.0007T
+0.007 +0.0003	**-0.002** -0.0001	**0.002L** **0.015T** 0.0001L 0.0006T	**+0.007** +0.0003	**+0.001** +0.0000	**0.001T** **0.015T** 0.0000T 0.0006T	–	–	–	**+0.012** +0.0005	**+0.006** +0.0002	**0.006T** **0.020T** 0.0002T 0.0008T
+0.008 +0.0003	**-0.003** -0.0001	**0.003L** **0.016T** 0.0001L 0.0006T	**+0.009** +0.0004	**+0.001** +0.0000	**0.001T** **0.017T** 0.0000T 0.0007T	–	–	–	**+0.015** +0.0006	**+0.007** +0.0003	**0.007T** **0.023T** 0.0003T 0.0009T
+0.009 +0.0004	**-0.004** -0.0002	**0.004L** **0.019T** 0.0002L 0.0008T	**+0.011** +0.0004	**+0.002** +0.0001	**0.002T** **0.021T** 0.0001T 0.0008T	–	–	–	**+0.017** +0.0007	**+0.008** +0.0003	**0.008T** **0.027T** 0.0003T 0.0011T
+0.011 +0.0004	**-0.005** -0.0002	**0.005L** **0.023T** 0.0002L 0.00085T	**+0.013** +0.0005	**+0.002** +0.0001	**0.002T** **0.025T** 0.0001T 0.0010T	**+0.018** +0.0007	**+0.002** +0.0001	**0.002T** **0.030T** 0.0001T 0.0012T	**+0.020** +0.0008	**+0.009** +0.0004	**0.009T** **0.032T** 0.0004T 0.00125T
+0.012 +0.0005	**-0.007** -0.0003	**0.007L** **0.027T** 0.0003L 0.0011T	**+0.015** +0.0006	**+0.002** +0.0001	**0.002T** **0.030T** 0.0001T 0.0012T	**+0.021** +0.0008	**+0.002** +0.0001	**0.002T** **0.036T** 0.0001T 0.0014T	**+0.024** +0.0009	**+0.011** +0.0004	**0.011T** **0.039T** 0.0004T 0.0015T
+0.013 +0.0005	**-0.009** -0.0004	**0.009L** **0.033T** 0.0004L 0.0013T	**+0.018** +0.0007	**+0.003** +0.0001	**0.003T** **0.038T** 0.0001T 0.0015T	**+0.025** +0.0010	**+0.003** +0.0001	**0.003T** **0.045T** 0.0001T 0.0018T	**+0.028** +0.0011	**+0.013** +0.0005	**0.013T** **0.048T** 0.0005T 0.0019T
+0.014 +0.0006	**-0.011** -0.0004	**0.011L** **0.039T** 0.0004L 0.0016T	**+0.021** +0.0008	**+0.003** +0.0001	**0.003T** **0.046T** 0.0001T 0.0018T	**+0.028** +0.0011	**+0.003** +0.0001	**0.003T** **0.053T** 0.0001T 0.0021T	**+0.033** +0.0013	**+0.015** +0.0006	**0.015T** **0.058T** 0.0006T 0.0023T
+0.016 +0.0006	**-0.013** -0.0005	**0.013L** **0.046T** 0.0005L 0.0018T	**+0.024** +0.0009	**+0.004** +0.0002	**0.004T** **0.054T** 0.0002T 0.0021T	–	–	–	**+0.037** +0.0015	**+0.017** +0.0007	**0.017T** **0.067T** 0.0007T 0.0027T
+0.016 +0.0006	**-0.013** -0.0005	**0.013L** **0.046T** 0.0005L 0.0018T	**+0.024** +0.0009	**+0.004** +0.0002	**0.004T** **0.054T** 0.0002T 0.0021T	–	–	–	**+0.037** +0.0015	**+0.017** +0.0007	**0.017T** **0.067T** 0.0007T 0.0027T
+0.016 +0.0006	**-0.013** -0.0005	**0.013L** **0.046T** 0.0005L 0.0018T	**+0.024** +0.0009	**+0.004** +0.0002	**0.004T** **0.054T** 0.0002T 0.0021T	–	–	–	**+0.037** +0.0015	**+0.017** +0.0007	**0.017T** **0.067T** 0.0007T 0.0027T
+0.016 +0.0006	**-0.016** -0.0006	**0.016L** **0.051T** 0.0006L 0.0020T	**+0.027** +0.0011	**+0.004** +0.0002	**0.004T** **0.062T** 0.0002T 0.0025T	–	–	–	**+0.043** +0.0017	**+0.020** +0.0008	**0.020T** **0.078T** 0.0008T 0.0031T

Continued on next page.

SHAFT AND HOUSING FITS

These charts are guidelines for specifying shaft and housing fits related to particular operating conditions found in table 6 on page 30.

Continued from previous page.

Bearing Bore			g6			h6			h5			j5		
Nominal (Max.)		Tolerance[1]	Shaft Diameter		Fit	Shaft Diameter		Fit	Shaft Diameter		Fit	Shaft Diameter		Fit
Over	Incl.		Max.	Min.		Max.	Min.		Max.	Min.		Max.	Min.	
mm in.	**mm** in.	**mm** in.	**mm** in.	**mm** in.	**mm** in.	**mm** in.	**mm** in.	**mm** in.	**mm** in.	**mm** in.	**mm** in.	**mm** in.	**mm** in.	**mm** in.
280.000 11.0236	**315.000** 12.4016	**-0.035** -0.0014	**-0.017** -0.0007	**-0.049** -0.0019	**0.049L 0.018T** 0.0019L 0.0007T	**0.000** 0.0000	**-0.032** -0.0013	**0.032L 0.035T** 0.0013L 0.0014T	–	–	–	**+0.007** +0.0003	**-0.016** -0.0006	**0.016L 0.042T** 0.0006L 0.0017T
315.000 12.4016	**355.000** 13.9764	**-0.040** -0.0016	**-0.018** -0.0007	**-0.054** -0.0021	**0.054L 0.022T** 0.0021L 0.0009T	**0.000** 0.0000	**-0.036** -0.0014	**0.036L 0.040T** 0.0014L 0.0016T	–	–	–	**+0.007** +0.0003	**-0.018** -0.0007	**0.018L 0.047T** 0.0007L 0.0019T
355.000 13.9764	**400.000** 15.7480	**-0.040** -0.0016	**-0.018** -0.0007	**-0.054** -0.0021	**0.054L 0.022T** 0.0021L 0.0009T	**0.000** 0.0000	**-0.036** -0.0014	**0.036L 0.040T** 0.0014L 0.0016T	–	–	–	**+0.007** +0.0003	**-0.018** -0.0007	**0.018L 0.047T** 0.0007L 0.0019T
400.000 15.7480	**450.000** 17.7165	**-0.045** -0.0018	**-0.020** -0.0008	**-0.060** -0.0024	**0.060L 0.025T** 0.0024L 0.0010T	**0.000** 0.0000	**-0.040** -0.0016	**0.040L 0.045T** 0.0016L 0.0018T	–	–	–	**+0.007** +0.0003	**-0.020** -0.0008	**0.020L 0.052T** 0.0008L 0.0021T
450.000 17.7165	**500.000** 19.6850	**-0.045** -0.0018	**-0.020** -0.0008	**-0.060** -0.0024	**0.060L 0.025T** 0.0024L 0.0010T	**0.000** 0.0000	**-0.040** -0.0016	**0.040L 0.045T** 0.0016L 0.0018T	–	–	–	**+0.007** +0.0003	**-0.020** -0.0008	**0.020L 0.052T** 0.0008L 0.0020T
500.000 19.6850	**560.000** 22.0472	**-0.050** -0.0020	**-0.022** -0.0009	**-0.066** -0.0026	**0.066L 0.028T** 0.0026L 0.0011T	**0.000** 0.0000	**-0.044** -0.0017	**0.044L 0.050T** 0.0017L 0.0020T	–	–	–	**+0.008** 0.0003	**-0.022** -0.0009	**0.022L 0.058T** 0.0009L 0.0023T
560.000 22.0472	**630.000** 24.8032	**-0.050** -0.0020	**-0.022** -0.0009	**-0.066** -0.0026	**0.066L 0.028T** 0.0026L 0.0011T	**0.000** 0.0000	**-0.044** -0.0017	**0.044L 0.050T** 0.0017L 0.0020T	–	–	–	**+0.008** +0.0003	**-0.022** -0.0009	**0.022L 0.058T** 0.0009L 0.0023T
630.000 24.8032	**710.000** 27.9528	**-0.075** -0.0030	**-0.024** -0.0009	**-0.074** -0.0029	**0.074L 0.051T** 0.0029L 0.0021T	**0.000** 0.0000	**-0.050** -0.0020	**0.050L 0.075T** 0.0020L 0.0030T	–	–	–	**+0.010** +0.0004	**-0.025** -0.0010	**0.025L 0.085T** 0.0010L 0.0035T
710.000 27.9528	**800.000** 31.4961	**-0.075** -0.0030	**-0.024** -0.0009	**-0.074** -0.0029	**0.074L 0.051T** 0.0029L 0.0021T	**0.000** 0.0000	**-0.050** -0.0020	**0.050L 0.075T** 0.0020L 0.0030T	–	–	–	**+0.010** +0.0004	**-0.025** -0.0010	**0.025L 0.085T** 0.0010L 0.0035T
800.000 31.4961	**900.000** 35.4331	**-0.100** -0.0039	**-0.026** -0.0010	**-0.082** 0.0032	**0.082L 0.074T** 0.0032L 0.0029T	**0.000** 0.0000	**-0.056** -0.0022	**0.056L 0.100T** 0.0022L 0.0039T	–	–	–	**+0.012** +0.0005	**-0.028** -0.0011	**0.028L 0.112T** 0.0011L 0.0044T
900.000 35.4331	**1000.000** 39.3701	**-0.100** -0.0039	**-0.026** -0.0010	**-0.082** 0.0032	**0.082L 0.074T** 0.0032L 0.0029T	**0.000** 0.0000	**-0.056** -0.0022	**0.056L 0.100T** 0.0022L 0.0039T	–	–	–	**+0.012** +0.0005	**-0.028** -0.0011	**0.028L 0.112T** 0.0011L 0.0044T
1000.000 39.3701	**1120.000** 44.0945	**-0.125** -0.0049	**-0.028** -0.0011	**-0.094** -0.0037	**0.094L 0.097T** 0.0037L 0.0038T	**0.000** 0.0000	**-0.066** -0.0026	**0.066L 0.125T** 0.0022L 0.0039T	–	–	–	**+0.013** +0.0005	**-0.033** -0.0013	**0.033L 0.138T** 0.0013L 0.0054T
1120.000 44.0945	**1250.000** 49.2126	**-0.125** -0.0049	**-0.028** -0.0011	**-0.094** -0.0037	**0.094L 0.097T** 0.0037L 0.0038T	**0.000** 0.0000	**-0.066** -0.0026	**0.066L 0.125T** 0.0022L 0.0039T	–	–	–	**+0.013** +0.0005	**-0.033** -0.0013	**0.033L 0.138T** 0.0013L 0.0054T

NOTE: Tolerance and shaft diameters are shown in the table as variances from nominal bearing bore.

[1]Tolerance range is from +0 to value listed.

These charts are guidelines for specifying shaft and housing fits related to particular operating conditions found in table 6 on page 30.

j6			k5			k6			m5		
Shaft Diameter		Fit	Shaft Diameter		Fit	Shaft Diameter		Fit	Shaft Diameter		Fit
Max.	Min.		Max.	Min.		Max.	Min.		Max.	Min.	
mm in.	**mm** in.	**mm** in.	**mm** in.	**mm** in.	**mm** in.	**mm** in.	**mm** in.	**mm** in.	**mm** in.	**mm** in.	**mm** in.
+0.016 +0.0006	**-0.016** -0.0006	**0.016L** **0.051T** 0.0006L 0.0020T	**+0.027** +0.0011	**+0.004** +0.0002	**0.004T** **0.062T** 0.0002T 0.0025T	–	–	–	**+0.043** +0.0017	**+0.020** +0.0008	**0.020T** **0.078T** 0.0008T 0.0031T
+0.018 +0.0007	**-0.018** -0.0007	**0.018L** **0.058T** 0.0007L 0.0023T	**+0.029** +0.0011	**+0.046** +0.0002	**0.004T** **0.069T** 0.0002T 0.0027T	–	–	–	**+0.046** +0.0018	**+0.021** +0.0008	**0.021T** **0.086T** 0.0008T 0.0034T
+0.018 +0.0007	**-0.018** -0.0007	**0.018L** **0.058T** 0.0007L 0.0023T	**+0.029** +0.0011	**+0.004** +0.0002	**0.004T** **0.069T** 0.0002T 0.0027T	–	–	–	**+0.046** +0.0018	**+0.021** +0.0008	**0.021T** **0.086T** 0.0008T 0.0034T
+0.020 +0.0008	**-0.020** -0.0008	**0.020L** **0.065T** 0.0008L 0.0026T	**+0.032** +0.0013	**+0.005** +0.0002	**0.005T** **0.077T** 0.0002T 0.0031T	–	–	–	**+0.050** +0.0020	**+0.023** +0.0009	**0.023T** **0.095T** 0.0009T 0.0037T
+0.020 +0.0008	**-0.020** -0.0008	**0.020L** **0.065T** 0.0008L 0.0026T	**+0.032** +0.0013	**+0.005** +0.0002	**0.005T** **0.077T** 0.0002T 0.0031T	–	–	–	**+0.050** +0.0020	**+0.023** +0.0009	**0.023T** **0.095T** 0.0009T 0.0037T
+0.022 +0.0009	**-0.022** -0.0009	**0.022L** **0.072T** 0.0009L 0.0029T	**+0.030** +0.0012	**0.000** 0.0000	**0.00T** **0.080T** 0.0000T 0.0032T	–	–	–	**+0.056** +0.0022	**+0.026** +0.0010	**0.026T** **0.106T** 0.0010T 0.0042T
+0.022 +0.0009	**-0.022** -0.0009	**0.022L** **0.072T** 0.0009L 0.0029T	**+0.030** +0.0012	**0.000** 0.0000	**0.00T** **0.080T** 0.0000T 0.0032T	–	–	–	**+0.056** +0.0022	**+0.026** +0.0010	**0.026T** **0.106T** 0.0010T 0.0042T
+0.025 +0.0010	**-0.025** -0.0010	**0.025L** **0.100T** 0.0010L 0.0040T	**+0.035** +0.0014	**0.000** 0.0000	**0.000T** **0.110T** 0.0000T 0.0044T	–	–	–	**+0.065** +0.0026	**+0.030** +0.0012	**0.030T** **0.140T** 0.0012T 0.0056T
+0.025 +0.0010	**-0.025** -0.0010	**0.025L** **0.100T** 0.0010L 0.0040T	**+0.035** +0.0014	**0.000** 0.0000	**0.000T** **0.110T** 0.0000T 0.0044T	–	–	–	**+0.065** +0.0026	**+0.030** +0.0012	**0.030T** **0.140T** 0.0012T 0.0056T
+0.025 +0.0010	**-0.025** -0.0010	**0.028L** **0.128T** 0.0011L 0.0050L	**+0.040** +0.0016	**0.000** 0.0000	**0.000T** **0.140T** 0.0000T 0.0055T	–	–	–	**+0.074** +0.0029	**+0.0030** +0.0012	**0.034T** **0.174T** 0.0012T 0.0056T
+0.028 +0.0011	**-0.028** -0.0011	**0.028L** **0.128T** 0.0011L 0.0050T	**+0.040** +0.0016	**0.000** 0.0000	**0.000T** **0.140T** 0.0000T 0.0055T	–	–	–	**+0.074** +0.0029	**+0.034** +0.0013	**0.034T** **0.174T** 0.0013T 0.0068T
+0.028 +0.0011	**-0.028** -0.0011	**0.033L** **0.158T** 0.0013L 0.0062T	**+0.046** +0.0018	**0.000** 0.0000	**0.000T** **0.171T** 0.0000T 0.0067T	–	–	–	**+0.086** +0.0034	**+0.040** +0.0016	**0.040T** **0.211T** 0.0016T 0.0083T
+0.033 +0.0013	**-0.033** -0.0013	**0.033L** **0.158T** 0.0013L 0.0062T	**+0.046** +0.0018	**0.000** 0.0000	**0.000T** **0.171T** 0.0000T 0.0067T	–	–	–	**+0.086** +0.0034	**+0.040** +0.0016	**0.040T** **0.211T** 0.0016T 0.0083T

These charts are guidelines for specifying shaft and housing fits related to particular operating conditions found in table 6 on page 30.

TABLE 10. SPHERICAL ROLLER BEARINGS – SHAFT TOLERANCES

Bearing Bore			m6			n6			p6			r6			r7		
Nominal (Max.)		Tolerance[1]	Shaft Diameter		Fit	Shaft Diameter		Fit	Shaft Diameter		Fit	Shaft Diameter		Fit	Shaft Diameter		Fit
Over	Incl.		Max.	Min.		Max.	Min.		Max.	Min.		Max.	Min.		Max.	Min.	
mm in.	**mm** in.	**mm** in.	**mm** in.	**mm** in.	**mm** in.	**mm** in.	**mm** in.	**mm** in.	**mm** in.	**mm** in.	**mm** in.	**mm** in.	**mm** in.	**mm** in.	**mm** in.	**mm** in.	**mm** in.
3.000 0.1181	**6.000** 0.2362	**-0.008** -0.0003	–	–	–	–	–	–	–	–	–	–	–	–	–	–	–
6.000 0.2362	**10.000** 0.3937	**-0.008** -0.0003	–	–	–	–	–	–	–	–	–	–	–	–	–	–	–
10.000 0.3937	**18.000** 0.7087	**-0.008** -0.0003	–	–	–	–	–	–	–	–	–	–	–	–	–	–	–
18.000 0.7087	**30.000** 1.1811	**-0.010** -0.0004	–	–	–	–	–	–	–	–	–	–	–	–	–	–	–
30.000 1.1811	**50.000** 1.9685	**-0.014** -0.0006	**+0.025** +0.0010	**+0.009** +0.0004	**0.009T** **0.037T** 0.0004T 0.0145T	–	–	–	–	–	–	–	–	–	–	–	–
50.000 1.9685	**80.000** 3.1496	**-0.015** -0.0006	**+0.030** +0.0012	**+0.011** +0.0004	**0.011T** **0.045T** 0.0004T 0.0018T	**+0.039** +0.0015	**+0.020** +0.0008	**0.020T** **0.054T** 0.0008T 0.0021T	–	–	–	–	–	–	–	–	–
80.000 3.1496	**120.000** 4.7244	**-0.020** -0.0008	**+0.035** +0.0014	**+0.013** +0.0005	**0.013T** **0.055T** 0.0005T 0.0022T	**+0.045** +0.0018	**+0.023** +0.0009	**0.023T** **0.065T** 0.0009T 0.0026T	**+0.059** +0.0023	**+0.037** +0.0015	**0.037T** **0.079T** 0.0015T 0.0031T	–	–	–	–	–	–
120.000 4.7244	**180.000** 7.0866	**-0.025** -0.0010	**+0.040** +0.0016	**+0.015** +0.0006	**0.015T** **0.065T** 0.0006T 0.0026T	**+0.052** +0.0020	**+0.027** +0.0011	**0.027T** **0.077T** 0.0011T 0.0030T	**+0.068** +0.0027	**+0.043** +0.0017	**0.043T** **0.093T** 0.0017T 0.0037T	**+0.090** +0.0035	**+0.065** +0.0026	**0.065T** **0.115T** 0.0026T 0.0045T	–	–	–
180.000 7.0866	**200.000** 7.8740	**-0.030** -0.0012	**+0.046** +0.0018	**+0.017** +0.0007	**0.017T** **0.076T** 0.0007T 0.0030T	**+0.060** +0.0024	**+0.031** +0.0012	**0.031L** **0.090T** 0.0012L 0.0036T	**+0.079** +0.0031	**+0.050** +0.0020	**0.050T** **0.109T** 0.0020T 0.0043T	**+0.106** +0.0042	**+0.077** +0.0030	**0.077T** **0.136T** 0.0030T 0.0054T	–	–	–
200.000 7.8740	**225.000** 8.8583	**-0.030** -0.0012	**+0.046** +0.0018	**+0.017** +0.0007	**0.017T** **0.076T** 0.0007T 0.0030T	**+0.060** +0.0024	**+0.031** +0.0012	**0.031L** **0.090T** 0.0012L 0.0036T	**+0.079** +0.0031	**+0.050** +0.0020	**0.050T** **0.109T** 0.0020T 0.0043T	**+0.109** +0.0043	**+0.080** +0.0031	**0.080T** **0.139T** 0.0031T 0.0055T	**+0.126** +0.0050	**+0.080** +0.0031	**0.080T** **0.156T** 0.0031T 0.0062T
225.000 8.8583	**250.000** 9.8425	**-0.030** -0.0012	**+0.046** +0.0018	**+0.017** +0.0007	**0.017T** **0.076T** 0.0007T 0.0030T	**+0.060** +0.0024	**+0.031** +0.0012	**0.031L** **0.090T** 0.0012L 0.0036T	**+0.079** +0.0031	**+0.050** +0.0020	**0.050T** **0.109T** 0.0020T 0.0043T	**+0.113** +0.0044	**+0.084** +0.0033	**0.084T** **0.143T** 0.0033T 0.0056T	**+0.130** +0.0051	**+0.084** +0.0033	**0.084T** **0.160T** 0.0033T 0.0063T
250.000 9.8425	**280.000** 11.0236	**-0.035** -0.0014	**+0.052** +0.0020	**+0.020** +0.0008	**0.020T** **0.087T** 0.0008T 0.0034T	**+0.066** +0.0026	**+0.034** +0.0013	**0.034T** **0.101T** 0.0013T 0.0040T	**+0.088** +0.0035	**+0.056** +0.0022	**0.056T** **0.123T** 0.0022T 0.0049T	**+0.126** +0.0050	**+0.094** +0.0037	**0.094T** **0.161T** 0.0037T 0.0064T	**+0.146** +0.0057	**+0.094** +0.0037	**0.094T** **0.181T** 0.0037T 0.0071T
280.000 11.0236	**315.000** 12.4016	**-0.035** -0.0014	**+0.052** +0.0020	**+0.020** +0.0008	**0.020T** **0.087T** 0.0008T 0.0034T	**+0.066** +0.0026	**+0.034** +0.0013	**0.034T** **0.101T** 0.0013T 0.0040T	**+0.088** +0.0035	**+0.056** +0.0022	**0.056T** **0.123T** 0.0022T 0.0049T	**+0.130** +0.0051	**+0.098** +0.0039	**0.098T** **0.165T** 0.0039T 0.0065T	**+0.150** +0.0059	**+0.098** +0.0039	**0.098T** **0.185T** 0.0039T 0.0073T

NOTE: Tolerance and shaft diameters are shown in the table as variances from nominal bearing bore.

[1]Tolerance range is from +0 to value listed.

Continued on next page.

These charts are guidelines for specifying shaft and housing fits related to particular operating conditions found in table 6 on page 30.

Continued from previous page.

Bearing Bore			m6			n6			p6			r6			r7		
Nominal (Max.)		Tolerance[1]	Shaft Diameter		Fit	Shaft Diameter		Fit	Shaft Diameter		Fit	Shaft Diameter		Fit	Shaft Diameter		Fit
Over	Incl.		Max.	Min.		Max.	Min.		Max.	Min.		Max.	Min.		Max.	Min.	
mm in.	**mm** in.	**mm** in.	**mm** in.	**mm** in.	**mm** in.	**mm** in.	**mm** in.	**mm** in.	**mm** in.	**mm** in.	**mm** in.	**mm** in.	**mm** in.	**mm** in.	**mm** in.	**mm** in.	**mm** in.
					0.021T			**0.037T**			**0.062T**			**0.108T**			**0.108T**
315.000	**355.000**	**-0.040**	**+0.057**	**+0.021**	**0.097T**	**+0.073**	**+0.037**	**0.113T**	**+0.098**	**+0.062**	**0.138T**	**+0.144**	**+0.108**	**0.184T**	**+0.165**	**+0.108**	**0.205T**
12.4016	13.9764	-0.0016	+0.0022	+0.0008	0.0008T	+0.0029	+0.0015	0.0015T	+0.0039	+0.0024	0.0024T	+0.0057	+0.0043	0.0043T	+0.0065	+0.0043	0.0043T
					0.0038T			0.0045T			0.0055T			0.0073T			0.0081T
								0.037T			**0.062T**			**0.114T**			**0.114T**
355.000	**400.000**	**-0.040**	–	–	–	**+0.073**	**+0.037**	**0.113T**	**+0.098**	**+0.062**	**0.138T**	**+0.150**	**+0.114**	**0.190T**	**+0.171**	**+0.114**	**0.211T**
13.9764	15.7480	-0.0016				+0.0029	+0.0015	0.0015T	+0.0039	+0.0024	0.0024T	+0.0059	+0.0045	0.0045T	+0.0067	+0.0045	0.0045T
								0.0045T			0.0055T			0.0075T			0.0083T
								0.040T			**0.068T**			**0.126T**			**0.126T**
400.000	**450.000**	**-0.045**	–	–	–	**+0.080**	**+0.040**	**0.125T**	**+0.108**	**+0.068**	**0.153T**	**+0.166**	**+0.126**	**0.211T**	**+0.189**	**+0.126**	**0.234T**
15.7480	17.7165	-0.0018				+0.0031	+0.0016	0.0016T	+0.0043	+0.0027	0.0027T	+0.0065	+0.0050	0.0050T	+0.0074	+0.0050	0.0050T
								0.0049T			0.0061T			0.0083T			0.0092T
								0.040T			**0.068T**			**0.132T**			**0.132T**
450.000	**500.000**	**-0.045**	–	–	–	**+0.080**	**+0.040**	**0.125T**	**+0.108**	**+0.068**	**0.153T**	**+0.172**	**+0.132**	**0.217T**	**+0.195**	**+0.132**	**0.240T**
17.7165	19.6850	-0.0018				+0.0031	+0.0016	0.0016T	+0.0043	+0.0027	0.0027T	+0.0068	+0.0052	0.0052T	+0.0077	+0.0052	0.0052T
								0.0049T			0.0061T			0.0086T			0.0095T
											0.078T			**0.150T**			**0.150T**
500.000	**560.000**	**-0.050**	–	–	–	–	–	–	**+0.122**	**+0.078**	**0.172T**	**+0.194**	**+0.150**	**0.244T**	**+0.220**	**+0.150**	**0.270T**
19.6850	22.0472	-0.0020							+0.0048	+0.0031	0.0031T	+0.0076	+0.0059	0.0059T	+0.0087	+0.0059	0.0059T
											0.0068T			0.0096T			0.0107T
											0.078T			**0.155T**			**0.155T**
560.000	**630.000**	**-0.050**	–	–	–	–	–	–	**+0.122**	**+0.078**	**0.172T**	**+0.199**	**+0.155**	**0.249T**	**+0.225**	**+0.155**	**0.275T**
22.0472	24.8032	-0.0020							+0.0048	+0.0031	0.0031T	+0.0078	+0.0061	0.0061T	+0.0089	+0.0061	0.0061T
											0.0068T			0.0098T			0.0109T
											0.088T			**0.175T**			**0.175T**
630.000	**710.000**	**-0.075**	–	–	–	–	–	–	**+0.138**	**+0.088**	**0.213T**	**+0.225**	**+0.175**	**0.300T**	**+0.255**	**+0.175**	**0.330T**
24.8032	27.9528	-0.0030							+0.0054	+0.0035	0.0035T	+0.0089	+0.0069	0.0069T	+0.0100	+0.0069	0.0069T
											0.0084T			0.0119T			0.0130T
											0.088T			**0.185T**			**0.185T**
710.000	**800.000**	**-0.075**	–	–	–	–	–	–	**+0.138**	**+0.088**	**0.213T**	**+0.235**	**+0.185**	**0.310T**	**+0.265**	**+0.185**	**0.340T**
27.9528	31.4961	-0.0030							+0.0054	+0.0035	0.0035T	+0.0093	+0.0073	0.0073T	+0.0104	+0.0073	0.0073T
											0.0084T			0.0123T			0.0134T
											0.100T			**0.210T**			**0.210T**
800.000	**900.000**	**-0.100**	–	–	–	–	–	–	**+0.156**	**+0.100**	**0.256T**	**+0.266**	**+0.210**	**0.366T**	**+0.300**	**+0.210**	**0.400T**
31.4961	35.4331	-0.0039							+0.0061	+0.0039	0.0039T	+0.0105	+0.0083	0.0083T	+0.0118	+0.0083	0.0083T
											0.0100T			0.0144T			0.0157T
											0.100T			**0.220T**			**0.220T**
900.000	**1000.000**	**-0.100**	–	–	–	–	–	–	**+0.156**	**+0.100**	**0.256T**	**+0.276**	**+0.220**	**0.366T**	**+0.0310**	**+0.220**	**0.410T**
35.4331	39.3701	-0.0039							+0.0061	+0.0039	0.0039T	+0.0109	+0.0087	0.0087T	+0.0122	+0.0087	0.0087T
											0.0100T			0.0148T			0.0161T
											0.120T			**0.250T**			**0.250T**
1000.000	**1120.000**	**-0.125**	–	–	–	–	–	–	**+0.186**	**+0.120**	**0.311T**	**+0.316**	**+0.250**	**0.441T**	**+0.355**	**+0.250**	**0.480T**
39.3701	44.0945	-0.0049							+0.0073	+0.0047	0.0047T	+0.0124	+0.0098	0.0098T	+0.0140	+0.0098	0.0098T
											0.0122T			0.0173T			0.0189T
											0.120T			**0.260T**			**0.260T**
1120.000	**1250.000**	**-0.125**	–	–	–	–	–	–	**+0.186**	**+0.120**	**0.311T**	**+0.326**	**+0.260**	**0.451T**	**+0.365**	**+0.260**	**0.490T**
44.0945	49.2126	-0.0049							+0.0073	+0.0047	0.0047T	+0.0128	+0.0102	0.0102T	+0.0144	+0.0102	0.0102T
											0.0122T			0.0177T			0.0193T

NOTE: Tolerance and shaft diameters are shown in the table as variances from nominal bearing bore.

[1]Tolerance range is from +0 to value listed.

These charts are guidelines for specifying shaft and housing fits related to particular operating conditions found in table 6 on page 30.

SPHERICAL ROLLER BEARING HOUSING TOLERANCES

TABLE 11. SPHERICAL ROLLER BEARINGS – HOUSING TOLERANCES

Bearing O.D.			F7			G7			H6			H7		
Nominal (Max.)		Tolerance[1]	Housing Bore		Fit	Housing Bore		Fit	Housing Bore		Fit	Housing Bore		Fit
Over	Incl.		Max.	Min.		Max.	Min.		Max.	Min.		Max.	Min.	
mm in.	mm in.	mm in.	mm in.	mm in.	mm in.	mm in.	mm in.	mm in.	mm in.	mm in.	mm in.	mm in.	mm in.	mm in.
					0.016L			**0.006L**			**0.000L**			**0.000L**
10.000	**18.000**	**-0.008**	**+0.034**	**+0.016**	**0.042L**	**+0.024**	**+0.002**	**0.032L**	**+0.011**	**0.000**	**0.019L**	**+0.018**	**0.000**	**0.026L**
0.3937	0.7087	-0.0003	+0.0013	+0.0006	0.0006L	+0.0009	+0.0002	0.0002L	+0.0004	0.0000	0.0000L	+0.0007	0.0000	0.0000L
					0.0016L			0.0012L			0.0007L			0.0010L
					0.020L			**0.007L**			**0.000L**			**0.000L**
18.000	**30.000**	**-0.009**	**+0.041**	**+0.020**	**0.050L**	**+0.028**	**+0.007**	**0.037L**	**+0.013**	**0.000**	**0.022L**	**+0.021**	**0.000**	**0.030L**
0.7087	1.1811	-0.0035	+0.0016	+0.0008	0.0008L	+0.0011	+0.0003	0.0003L	+0.0005	0.0000	0.0000L	+0.0008	0.0000	0.0000L
					0.00195L			0.00145L			0.00085L			0.00125L
					0.025L			**0.009L**			**0.000L**			**0.000L**
30.000	**50.000**	**-0.011**	**+0.050**	**+0.025**	**0.061L**	**+0.034**	**+0.009**	**0.045L**	**+0.016**	**0.000**	**0.027L**	**+0.025**	**0.000**	**0.036L**
1.1811	1.9685	-0.00045	+0.0020	+0.0010	0.0010L	+0.0013	+0.0004	0.0004L	+0.0006	0.0000	0.0000L	+0.0010	0.0000	0.0000L
					0.00245L			0.00175L			0.00105L			0.00145L
					0.030L			**0.010L**			**0.000L**			**0.000L**
50.000	**80.000**	**-0.013**	**+0.060**	**+0.030**	**0.073L**	**+0.040**	**+0.010**	**0.053L**	**+0.019**	**0.000**	**0.032L**	**+0.030**	**0.000**	**0.059L**
1.9685	3.1496	-0.0005	+0.0024	+0.0012	0.0012L	+0.0016	+0.0004	0.0004L	+0.0007	0.0000	0.0000L	+0.0012	0.0000	0.0000L
					0.0029L			0.0021L			0.0012L			0.0017L
					0.036L			**0.012L**			**0.000L**			**0.000L**
80.000	**120.000**	**-0.015**	**+0.071**	**+0.036**	**0.086L**	**+0.047**	**+0.012**	**0.062L**	**+0.022**	**0.000**	**0.037L**	**+0.035**	**0.000**	**0.050L**
3.1496	4.7244	-0.0006	+0.0028	+0.0014	0.0014L	+0.0019	+0.0005	0.0005L	+0.0009	0.0000	0.0000L	+0.0014	0.0000	0.0000L
					0.0034L			0.0025L			0.0015L			0.0020L
					0.043L			**0.014L**			**0.000L**			**0.000L**
120.000	**150.000**	**-0.018**	**+0.083**	**+0.043**	**0.101L**	**+0.054**	**+0.014**	**0.072L**	**+0.025**	**0.000**	**0.043L**	**+0.040**	**0.000**	**0.058L**
4.7244	5.9055	-0.0007	+0.0033	+0.0017	0.0017L	+0.0021	+0.0006	0.0006L	+0.0010	0.0000	0.0000L	+0.0016	0.0000	0.0000L
					0.0040L			0.0028L			0.0017L			0.0023L
					0.043L			**0.014L**			**0.000L**			**0.000L**
150.000	**180.000**	**-0.025**	**+0.083**	**+0.043**	**0.108L**	**+0.054**	**+0.014**	**0.079L**	**+0.025**	**0.000**	**0.050L**	**+0.040**	**0.000**	**0.065L**
5.9055	7.0866	-0.0010	+0.0033	+0.0017	0.0017L	+0.0021	+0.0006	0.0006L	+0.0010	0.0000	0.0000L	+0.0016	0.0000	0.0000L
					0.0043L			0.0031L			0.0020L			0.0026L
					0.050L			**0.015L**			**0.000L**			**0.000L**
180.000	**250.000**	**-0.030**	**+0.096**	**+0.050**	**0.126L**	**+0.061**	**+0.015**	**0.091L**	**+0.029**	**0.000**	**0.059L**	**+0.046**	**0.000**	**0.076L**
7.0866	9.8425	-0.0012	+0.0038	+0.0020	0.0020L	+0.0024	+0.0006	0.0006L	+0.0011	0.0000	0.0000L	+0.0018	0.0000	0.0000L
					0.0050L			0.0036L			0.0023L			0.0030L
					0.056L			**0.017L**			**0.000L**			**0.000L**
250.000	**315.000**	**-0.035**	**+0.108**	**+0.056**	**0.143L**	**+0.069**	**+0.17**	**0.104L**	**+0.032**	**0.000**	**0.067L**	**+0.052**	**0.000**	**0.087L**
9.8425	12.4016	-0.0014	+0.0043	+0.0022	0.0022L	+0.0027	+0.0007	0.0007L	+0.0013	0.0000	0.0000L	+0.0020	0.0000	0.0000L
					0.0057L			0.0041L			0.0027L			0.0034L
					0.063L			**0.018L**			**0.000L**			**0.000L**
315.000	**400.000**	**-0.040**	**+0.119**	**+0.062**	**0.159L**	**+0.075**	**+0.018**	**0.115L**	**+0.089**	**0.000**	**0.129L**	**+0.057**	**0.000**	**0.097L**
12.4016	15.7480	-0.0016	+0.0047	+0.0024	0.0024L	+0.0030	+0.0007	0.0007L	+0.0014	0.0000	0.0000L	+0.0022	0.0000	0.0000L
					0.0063L			0.0046L			0.0030L			0.0038L
					0.068L			**0.020L**			**0.000L**			**0.000L**
400.000	**500.000**	**-0.045**	**+0.131**	**+0.068**	**0.176L**	**+0.083**	**+0.020**	**0.128L**	**+0.097**	**0.000**	**0.142L**	**+0.063**	**0.000**	**0.108L**
15.7480	19.6850	-0.0018	+0.0052	+0.0027	0.0027L	+0.0033	+0.0008	0.0008L	+0.0016	0.0000	0.0000L	+0.0025	0.0000	0.0000L
					0.0070L			0.0051L			0.0034L			0.0043L
					0.076L			**0.022L**			**0.000L**			**0.000L**
500.000	**630.000**	**-0.050**	**+0.146**	**+0.076**	**0.196L**	**+0.092**	**+0.022**	**0.142L**	**+0.110**	**0.000**	**0.160L**	**+0.070**	**0.000**	**0.120L**
19.6850	24.8032	-0.0020	+0.0057	+0.0030	0.0030L	+0.0036	+0.0009	0.0009L	+0.0017	0.0000	0.0000L	+0.0028	0.0000	0.0000L
					0.0077L			0.0056L			0.0037L			0.0048L

NOTE: Tolerance and shaft diameters are shown in the table as variances from nominal bearing O.D.

[1]Tolerance range is from +0 to value listed.

These charts are guidelines for specifying shaft and housing fits related to particular operating conditions found in table 6 on page 30.

H8			J6			J7			K6			K7		
Housing Bore		Fit	Housing Bore		Fit	Housing Bore		Fit	Housing Bore		Fit	Housing Bore		Fit
Max.	Min.		Max.	Min.		Max.	Min.		Max.	Min.		Max.	Min.	
mm	**mm**	**mm**	**mm**	**mm**	**mm**	**mm**	**mm**	**mm**	**mm**	**mm**	**mm**	**mm**	**mm**	**mm**
in.	in.	in.	in.	in.	in.	in.	in.	in.	in.	in.	in.	in.	in.	in.
		0.000L			**0.005T**			**0.008T**			**0.009T**			**0.012T**
+0.027	**0.000**	**0.035L**	**+0.006**	**-0.005**	**0.014L**	**+0.10**	**-0.008**	**0.018L**	**+0.002**	**-0.009**	**0.010L**	**+0.006**	**-0.012**	**0.014L**
+0.0011	0.0000	0.0000L	+0.0002	-0.0002	0.0002T	+0.004	-0.0003	0.0003T	+0.0001	-0.0004	0.0004T	+0.0002	-0.0005	0.0005T
		0.0014L			0.0005L			0.0007L			0.0004L			0.0005L
		0.000L			**0.005T**			**0.009T**			**0.011T**			**0.015T**
+0.033	**0.000**	**0.030L**	**+0.008**	**-0.005**	**0.017L**	**+0.012**	**-0.009**	**0.021L**	**+0.002**	**-0.011**	**0.011L**	**+0.006**	**-0.015**	**0.015L**
+0.0013	0.0000	0.0000L	+0.0003	-0.0002	0.0002T	+0.0005	-0.0004	0.0004T	+0.0001	-0.0004	0.0004T	+0.0002	-0.0006	0.0006T
		0.00165L			0.00065L			0.00085L			0.00045L			0.00055L
		0.000L			**0.006T**			**0.011T**			**0.013T**			**0.018T**
+0.039	**0.000**	**0.050L**	**+0.010**	**-0.006**	**0.021L**	**+0.014**	**-0.011**	**0.025L**	**+0.003**	**-0.014**	**0.014L**	**+0.007**	**-0.018**	**0.018L**
+0.0015	0.0000	0.0000L	+0.0002	-0.0002	0.0002T	+0.0006	-0.0004	0.0004T	+0.0001	-0.0005	0.0005T	+0.0003	-0.0007	0.0007T
		0.00195L			0.00085L			0.00105L			0.00055L			0.00065L
		0.000L			**0.006T**			**0.012T**			**0.015T**			**0.021T**
+0.046	**0.000**	**0.059L**	**+0.013**	**-0.006**	**0.026L**	**+0.018**	**-0.012**	**0.031L**	**+0.004**	**-0.015**	**0.017L**	**+0.009**	**-0.021**	**0.022L**
+0.0018	0.0000	0.0000L	+0.0005	-0.0002	0.0002T	+0.0007	-0.0005	0.0005T	+0.0002	-0.0006	0.0006T	+0.0004	-0.0008	0.0008T
		0.0023L			0.0010L			0.0012L			0.0007L			0.0009L
+0.054	**0.000**	**0.000L**			**0.006T**			**0.013T**			**0.018T**			**0.025T**
+0.054	**0.000**	**0.069L**	**+0.016**	**-0.006**	**0.031L**	**+0.022**	**-0.013**	**0.037L**	**+0.004**	**-0.018**	**0.019L**	**+0.010**	**-0.025**	**0.025L**
+0.0021	0.0000	0.0000L	+0.0006	-0.0002	0.0002T	+0.0009	-0.0005	0.0005T	+0.0002	-0.0007	0.0007T	+0.0004	-0.0010	0.0010T
		0.0027L			0.0012L			0.0015L			0.0008L			0.0010L
		0.000L			**0.007T**			**0.014T**			**0.021T**			**0.028T**
+0.063	**0.000**	**0.081L**	**+0.018**	**-0.007**	**0.036L**	**+0.026**	**-0.014**	**0.044L**	**+0.004**	**-0.021**	**0.022L**	**+0.012**	**-0.028**	**0.030L**
+0.0025	0.0000	0.0000L	+0.0007	-0.0003	0.0003T	+0.0010	-0.0006	0.0006T	+0.0002	-0.0008	0.0008T	+0.0005	-0.0011	0.0011T
		0.0032L			0.0014L			0.0017L			0.0009L			0.0012L
		0.000L			**0.007T**			**0.014T**			**0.021T**			**0.028T**
+0.063	**0.000**	**0.088L**	**+0.018**	**-0.007**	**0.043L**	**+0.026**	**-0.014**	**0.051L**	**+0.004**	**-0.021**	**0.029L**	**+0.012**	**-0.033**	**0.037L**
+0.0025	0.0000	0.0000L	+0.0007	-0.0003	0.0003T	+0.0010	-0.0006	0.0006T	+0.0002	-0.0008	0.008T	+0.0005	-0.028	0.0011T
		0.0035L			0.0017L			0.0020L			0.0012L			0.0015L
		0.000L			**0.007T**			**0.016T**			**0.024T**			**0.033T**
+0.072	**0.000**	**0.102L**	**+0.022**	**-0.007**	**0.052L**	**+0.030**	**-0.016**	**0.060L**	**+0.005**	**-0.024**	**0.035L**	**+0.013**	**-0.0011**	**0.043L**
+0.0028	0.0000	0.0000L	+0.0007	-0.0003	0.0003T	+0.0012	-0.0006	0.0006T	+0.0002	-0.0009	0.0009T	+0.0005	-0.0013	0.0013T
		0.0040L			0.0021L			0.0024L			0.0014L			0.0017L
		0.000L			**0.007T**			**0.016T**			**0.027T**			**0.036T**
+0.081	**0.000**	**0.116L**	**+0.025**	**-0.007**	**0.060L**	**+0.036**	**-0.016**	**0.071L**	**+0.005**	**-0.027**	**0.040L**	**+0.016**	**-0.036**	**0.051L**
+0.0032	0.0000	0.0000L	+0.0010	-0.0003	0.0003T	+0.0014	-0.0006	0.0006T	+0.0002	-0.0011	0.0011T	+0.0006	-0.0014	0.0014T
		0.0046L			0.0024L			0.0028L			0.0016L			0.0020L
		0.000L			**0.007T**			**0.018T**			**0.029T**			**0.040T**
+0.036	**0.000**	**0.076L**	**+0.029**	**-0.007**	**0.069L**	**+0.039**	**-0.018**	**0.079L**	**+0.007**	**-0.029**	**0.047L**	**+0.017**	**-0.040**	**0.057L**
+0.035	0.0000	0.0000L	+0.0011	-0.0003	0.0003T	+0.0015	-0.0007	0.0007T	+0.0003	-0.0011	0.0011T	+0.0007	-0.0016	0.0016T
		0.0051L			0.0027L			0.0031L			0.0019L			0.0023L
		0.000L			**0.007T**			**0.020T**			**0.032T**			**0.045T**
+0.040	**0.000**	**0.085**	**+0.033**	**-0.007**	**0.078L**	**+0.043**	**-0.020**	**0.088L**	**+0.008**	**-0.032**	**0.053L**	**+0.018**	**-0.045**	**0.063L**
+0.0038	0.0000	0.0000L	+0.0013	-0.0003	0.0003T	+0.0017	-0.0008	0.0008T	+0.0003	-0.0013	0.0013T	+0.0007	-0.0018	0.0018T
		0.0056L			0.0031L			0.0035L			0.0021L			0.0025L
		0.000L			**0.022T**			**0.022T**			**0.044T**			**0.070T**
+0.044	**0.000**	**0.094L**	**+0.037**	**-0.007**	**0.098L**	**+0.048**	**-0.022**	**0.098L**	**0.000**	**-0.044**	**0.050L**	**0.000**	**-0.070**	**0.050L**
+0.0043	0.0000	0.0000L	+0.0015	-0.0003	0.0003T	+0.0019	-0.0009	0.0009T	0.0000	-0.0017	0.0017T	0.0000	-0.0028	0.0028T
		0.0063L			0.0035L			0.0039L			0.0020L			0.0020L

Continued on next page.

SHAFT AND HOUSING FITS

These charts are guidelines for specifying shaft and housing fits related to particular operating conditions found in table 6 on page 30.

Continued from previous page.

Bearing O.D.			F7			G7			H6			H7		
Nominal (Max.)		Tolerance[1]	Housing Bore		Fit	Housing Bore		Fit	Housing Bore		Fit	Housing Bore		Fit
Over	Incl.		Max.	Min.		Max.	Min.		Max.	Min.		Max.	Min.	
mm	**mm**	**mm**	**mm**	**mm**	**mm**	**mm**	**mm**	**mm**	**mm**	**mm**	**mm**	**mm**	**mm**	**mm**
in.	in.	in.	in.	in.	in.	in.	in.	in.	in.	in.	in.	in.	in.	in.
					0.080L			**0.024L**			**0.000L**			**0.000L**
630.000	**800.000**	**-0.075**	**+0.160**	**+0.080**	**0.235L**	**+0.104**	**+0.024**	**0.179L**	**+0.125**	**0.000**	**0.200L**	**+0.080**	**0.000**	**0.155L**
24.8032	31.4961	-0.0030	+0.0063	+0.0031	0.0031L	+0.0041	+0.0009	0.0009L	+0.0020	0.0000	0.0000L	+0.0031	0.0000	0.0000L
					0.0093L			0.0071L			0.0030L			0.0061L
					0.086L			**0.026L**			**0.000L**			**0.000L**
800.000	**1000.000**	**-0.100**	**+0.179**	**+0.086**	**0.276L**	**+0.116**	**+0.026**	**0.216L**	**+0.140**	**0.000**	**0.240L**	**+0.090**	**0.000**	**0.190L**
31.4961	39.3701	-0.0039	+0.0063	+0.0034	0.0034L	+0.0046	+0.0010	0.0010L	+0.0022	0.0000	0.0000L	+0.0035	0.0000	0.0000L
					0.0108L			0.0085L			0.0061L			0.0074L
					0.098L			**0.028L**			**0.000L**			**0.000L**
1000.000	**1250.000**	**-0.125**	**+0.203**	**+0.098**	**0.328L**	**+0.133**	**+0.028**	**0.258L**	**+0.165**	**0.000**	**0.290L**	**+0.105**	**0.000**	**0.230L**
39.3701	49.2126	-0.0049	+0.0080	+0.0039	0.0039L	+0.0052	+0.0011	0.0011L	+0.0026	0.0000	0.0000L	+0.0041	0.0000	0.0000L
					0.0129L			0.0101L			0.0075L			0.0090L
					0.110L			**0.030L**			**0.000L**			**0.000L**
1250.000	**1600.000**	**-0.160**	**+0.155**	**+0.030**	**0.395L**	**+0.155**	**+0.030**	**0.315L**	**+0.195**	**0.000**	**0.355L**	**+0.125**	**0.000**	**0.355L**
49.2126	62.9921	-0.0063	+0.0093	+0.0043	0.0043L	+0.0061	+0.0012	0.0012L	+0.0031	0.0000	0.0000L	+0.0049	0.0000	0.0000L
					0.0156L			0.0124L			0.0094L			0.0112L
					0.120L			**0.032L**			**0.000L**			**0.000L**
1600.000	**2000.000**	**-0.200**	**+0.270**	**+0.120**	**0.470L**	**+0.182**	**+0.032**	**0.382L**	**+0.230**	**0.000**	**0.430L**	**+0.150**	**0.000**	**0.350L**
62.9921	78.7402	-0.0079	+0.0106	+0.0047	0.0047L	+0.0072	+0.0013	0.0013L	+0.0036	0.0000	0.0000L	+0.0059	0.0000	0.0000L
					0.0185L			0.0151L			0.0115L			0.0138L
					0.130L			**0.034L**			**0.000L**			**0.000L**
2000.000	**2500.000**	**-0.250**	**+0.305**	**+0.0130**	**0.555L**	**+0.209**	**+0.034**	**0.459L**	**+0.280**	**0.000**	**0.530L**	**+0.175**	**0.000**	**0.425L**
78.7402	98.4252	-0.0098	0.0120	+0.0051	0.0051L	+0.0082	+0.0013	0.0013L	+0.043	0.0000	0.0000L	+0.0069	0.0000	0.0000L
					0.0218L			0.0180L			0.0141L			0.0167L

NOTE: Tolerance and shaft diameters are shown in the table as variances from nominal bearing O.D.
[1]Tolerance range is from +0 to value listed.

These charts are guidelines for specifying shaft and housing fits related to particular operating conditions found in table 6 on page 30.

H8			J6			J7			K6			K7		
Housing Bore		Fit	Housing Bore		Fit	Housing Bore		Fit	Housing Bore		Fit	Housing Bore		Fit
Max.	Min.		Max.	Min.		Max.	Min.		Max.	Min.		Max.	Min.	
mm	**mm**	**mm**	**mm**	**mm**	**mm**	**mm**	**mm**	**mm**	**mm**	**mm**	**mm**	**mm**	**mm**	**mm**
in.	in.	in.	in.	in.	in.	in.	in.	in.	in.	in.	in.	in.	in.	in.
		0.000L			**0.010T**			**0.024T**			**0.050T**			**0.080T**
+0.050	**0.000**	**0.125L**	**+0.040**	**-0.010**	**0.115L**	**+0.056**	**-0.024**	**0.131L**	**0.000**	**-0.050**	**0.075L**	**0.000**	**-0.080**	**0.075L**
+0.0049	0.0000	0.0000L	+0.0016	-0.0004	0.0004T	+0.0022	-0.0009	0.0009T	0.0000	-0.0020	0.0020T	0.0000	-0.0031	0.0031T
		0.0079L			0.0046L			0.0052L			0.0030L			0.0030L
		0.000L			**0.010T**			**0.026T**			**0.056T**			**0.090T**
+0.056	**0.000**	**0.156L**	**+0.046**	**-0.010**	**0.146L**	**+0.064**	**-0.026**	**0.164L**	**0.000**	**-0.056**	**0.100L**	**0.000**	**-0.090**	**0.100L**
+0.0055	0.0000	0.0000L	+0.0018	-0.0004	0.0004T	+0.0025	-0.0010	0.0010T	0.0000	-0.0022	0.0022T	0.0000	-0.0035	0.0035T
		0.0094L			0.0057L			0.0064L			0.0039L			0.0039L
		0.000L			**0.010T**			**0.028T**			**0.066T**			**0.105T**
+0.066	**0.000**	**0.191L**	**+0.056**	**-0.010**	**0.181L**	**+0.077**	**-0.028**	**0.202L**	**0.000**	**-0.066**	**0.125L**	**0.000**	**-0.105**	**0.125L**
+0.0065	0.0000	0.0000L	+0.0022	-0.0004	0.0004T	+0.0030	-0.0011	0.0011T	0.0000	-0.0026	0.0026T	0.0000	-0.0041	0.0041T
		0.0114L			0.0071L			0.0079L			0.0049L			0.0049L
		0.000L			**0.010T**			**0.030T**			**0.078T**			**0.125T**
+0.078	**0.000**	**0.238L**	**+0.068**	**-0.010**	**0.228L**	**+0.095**	**-0.030**	**0.255L**	**0.000**	**-0.078**	**0.160L**	**0.000**	**-0.125**	**0.160L**
+0.0077	0.0000	0.0000L	+0.0027	-0.0004	0.0004T	+0.0037	-0.0012	0.0012T	0.0000	-0.0031	0.0031T	0.0000	-0.0049	0.0049T
		0.0104L			0.0090L			0.0100L			0.0063L			0.0063L
		0.000L			**0.110T**			**0.032T**			**0.092T**			**0.150T**
+0.092	**0.000**	**0.292L**	**+0.082**	**-0.010**	**0.282L**	**+0.118**	**-0.032**	**0.318L**	**0.000**	**-0.092**	**0.200L**	**0.000**	**-0.150**	**0.200L**
+0.0091	0.0000	0.0000L	+0.0032	-0.0004	0.0004T	+0.0046	-0.0013	0.0013T	0.0000	-0.0036	0.0036T	0.0000	-0.0059	0.0059T
		0.0170L			0.0111L			0.0125L			0.0079L			0.0079L
		0.000L			**0.010T**			**0.034T**			**0.110T**			**0.175T**
+0.110	**0.000**	**0.360L**	**+0.100**	**-0.010**	**0.350L**	**+0.141**	**-0.034**	**0.391L**	**0.000**	**-0.110**	**0.250L**	**0.000**	**-0.175**	**0.250L**
+0.0110	0.0000	0.0000L	+0.0039	-0.0004	0.0004T	+0.0056	-0.0013	0.0013T	0.0000	-0.0043	0.0043T	0.0000	-0.0069	0.0069T
		0.0208L			0.0137L			0.0154L			0.0098L			0.0098L

SHAFT AND HOUSING FITS

These charts are guidelines for specifying shaft and housing fits related to particular operating conditions found in table 6 on page 30.

TABLE 12. SPHERICAL ROLLER BEARINGS – HOUSING TOLERANCES

Bearing O.D.			M6			M7			N6		
Nominal (Max.)		Tolerance[1]	Housing Bore		Fit	Housing Bore		Fit	Housing Bore		Fit
Over	Incl.		Max.	Min.		Max.	Min.		Max.	Min.	
mm	**mm**	**mm**	**mm**	**mm**	**mm**	**mm**	**mm**	**mm**	**mm**	**mm**	**mm**
in.	in.	in.	in.	in.	in.	in.	in.	in.	in.	in.	in.
					0.015T			**0.018T**			**0.020T**
10.000	**18.000**	**-0.008**	**-0.004**	**-0.015**	**0.004L**	**0.000**	**-0.018**	**0.008L**	**-0.009**	**-0.020**	**0.001T**
0.3937	0.7087	-0.0003	-0.0002	-0.0006	0.0006T	0.0000	-0.0007	0.0007T	-0.0004	-0.0008	0.0008T
					0.0001L			0.0003L			0.0001T
					0.017T			**0.021T**			**0.024T**
18.000	**30.000**	**-0.009**	**-0.004**	**-0.017**	**0.005L**	**0.000**	**-0.021**	**0.009L**	**-0.007**	**-0.028**	**0.002T**
0.7087	1.1811	-0.0035	-0.0002	-0.0007	0.0007T	0.0000	-0.0008	0.0008T	-0.0004	-0.0009	0.0009T
					0.00015L			0.0035L			0.00005T
					0.020T			**0.025T**			**0.028T**
30.000	**50.000**	**-0.011**	**-0.004**	**-0.020**	**0.007L**	**0.000**	**-0.025**	**0.011L**	**-0.012**	**-0.028**	**0.001T**
1.1811	1.9685	-0.0045	-0.0002	-0.0008	0.0008T	0.0000	-0.0010	0.0010T	-0.0005	-0.0011	0.0011T
					0.00025L			0.00045L			0.00005T
					0.024T			**0.030T**			**0.033T**
50.000	**80.000**	**-0.013**	**-0.005**	**-0.024**	**0.008L**	**0.000**	**-0.030**	**0.013L**	**-0.014**	**-0.033**	**0.001T**
1.9685	3.1496	-0.0005	-0.0002	-0.0009	0.0009T	0.0000	-0.0012	0.0012T	-0.0006	-0.0013	0.0013T
					0.0003L			0.0005L			0.0001T
					0.028T			**0.035T**			**0.038T**
80.000	**120.000**	**-0.015**	**-0.006**	**-0.028**	**0.009L**	**0.000**	**-0.035**	**0.015L**	**-0.016**	**-0.038**	**0.001T**
3.1496	4.7244	-0.0006	-0.0002	-0.0011	0.0011T	0.0000	-0.0014	0.0014T	-0.0006	-0.0015	0.0015T
					0.0004L			0.0006L			0.0000T
					0.033T			**0.040T**			**0.045T**
120.000	**150.000**	**-0.018**	**-0.008**	**-0.033**	**0.010L**	**0.000**	**-0.040**	**0.018L**	**-0.020**	**-0.045**	**0.002T**
4.7244	5.9055	-0.0007	-0.0003	-0.0013	0.0013T	0.0000	-0.0016	0.0016T	-0.0008	-0.0018	0.0018T
					0.0004L			0.0007L			0.0001T
					0.033T			**0.040T**			**0.045T**
150.000	**180.000**	**-0.025**	**-0.008**	**-0.033**	**0.017L**	**0.000**	**-0.040**	**0.025L**	**-0.020**	**-0.045**	**0.005T**
5.9055	7.0866	-0.0010	-0.0003	-0.0013	0.0013T	0.0000	-0.0016	0.0016T	-0.0008	-0.0018	0.0018T
					0.0007L			0.0010L			0.0002T
					0.037T			**0.046T**			**0.051T**
180.000	**250.000**	**-0.030**	**-0.008**	**-0.037**	**0.022L**	**0.000**	**-0.046**	**0.030L**	**-0.022**	**-0.051**	**0.008T**
7.0866	9.8425	-0.0012	-0.0003	-0.0015	0.0015T	0.0000	-0.0018	0.0018T	-0.0009	-0.0020	0.0020T
					0.0009L			0.0012L			0.0003T
					0.041T			**0.052T**			**0.057T**
250.000	**315.000**	**-0.035**	**-0.009**	**-0.041**	**0.026L**	**0.000**	**-0.052**	**0.035L**	**-0.025**	**-0.057**	**0.010T**
9.8425	12.4016	-0.0014	-0.0004	-0.0016	0.0016T	0.0000	-0.0020	0.0020T	-0.0010	-0.0022	0.0022T
					0.0010L			030014L			0.0004T
					0.046T			**0.057T**			**0.062T**
315.000	**400.000**	**-0.040**	**-0.010**	**-0.046**	**0.030L**	**0.000**	**-0.057**	**0.040L**	**-0.026**	**-0.062**	**0.014T**
12.4016	15.7480	-0.0016	-0.0004	-0.0018	0.0018T	0.0000	-0.0022	0.0022T	-0.0006	-0.0029	0.0024T
					0.0012L			0.0016L			0.0006T
					0.050T			**0.063T**			**0.067T**
400.000	**500.000**	**-0.045**	**-0.010**	**-0.050**	**0.035L**	**0.000**	**-0.063**	**0.045L**	**-0.027**	**-0.067**	**0.018T**
15.7480	19.6850	-0.0018	-0.0004	-0.0020	0.0020T	0.0000	-0.0025	0.0025T	-0.0011	-0.0026	0.0026T
					0.0014L			0.0018L			0.0007T
					0.070T			**0.096T**			**0.088T**
500.000	**630.000**	**-0.050**	**-0.026**	**-0.070**	**0.024L**	**-0.026**	**-0.096**	**0.024L**	**-0.044**	**-0.088**	**0.006T**
19.6850	24.8032	-0.0020	-0.0010	-0.0028	0.0028T	-0.0010	-0.0038	0.0038T	-0.0017	-0.0035	0.0035T
					0.0010L			0.0010L			0.0003T

NOTE: Tolerance and shaft diameters are shown in the table as variances from nominal bearing O.D.

[1]Tolerance range is from +0 to value listed.

These charts are guidelines for specifying shaft and housing fits related to particular operating conditions found in table 6 on page 30.

N7			P6			P7		
Housing Bore		Fit	Housing Bore		Fit	Housing Bore		Fit
Max.	Min.		Max.	Min.		Max.	Min.	
mm	**mm**	**mm**	**mm**	**mm**	**mm**	**mm**	**mm**	**mm**
in.	in.	in.	in.	in.	in.	in.	in.	in.
		0.023T			**0.026T**			**0.029T**
-0.005	**-0.023**	**0.003L**	**-0.015**	**-0.026**	**0.007T**	**-0.011**	**-0.029**	**0.003T**
-0.0002	-0.0009	0.0009T	-0.0006	-0.0010	0.0010T	-0.0004	-0.0011	0.0011T
		0.0001L			0.0003T			0.0001T
		0.028T			**0.031T**			**0.035T**
-0.007	**-0.028**	**0.002L**	**-0.018**	**-0.031**	**0.009T**	**-0.014**	**-0.035**	**0.005T**
-0.0003	-0.0011	0.0011T	-0.0007	-0.0012	0.0012T	-0.0006	-0.0014	0.0014T
		0.00005L			0.00035T			0.0025T
		0.033T			**0.037T**			**0.042T**
-0.008	**-0.033**	**0.003L**	**-0.021**	**-0.037**	**0.010T**	**-0.017**	**-0.042**	**0.006T**
-0.0003	-0.0013	0.0013T	-0.0008	-0.0015	0.0015T	-0.0007	-0.0017	0.0017T
		0.00015L			0.00035T			0.0025T
		0.039T			**0.045T**			**0.051T**
-0.009	**-0.039**	**0.004L**	**-0.026**	**-0.045**	**0.013T**	**-0.021**	**-0.051**	**0.008T**
-0.0004	-0.0015	0.0015T	-0.0010	-0.0018	0.0018T	-0.0008	-0.0020	0.0020T
		0.0001L			0.0005T			0.0003T
		0.045T			**0.052T**			**0.059T**
-0.010	**-0.045**	**0.005L**	**-0.030**	**-0.052**	**0.015T**	**-0.024**	**-0.059**	**0.009T**
-0.0004	-0.0018	0.0018T	-0.0012	-0.0020	0.0020T	-0.0009	-0.0023	0.0023T
		0.0002L			0.0006T			0.0003T
		0.061T			**0.061T**			**0.068T**
-0.012	**-0.052**	**0.018L**	**-0.036**	**-0.061**	**0.018T**	**-0.028**	**-0.068**	**0.010T**
-0.0005	-0.0020	0.0020T	-0.0014	-0.0024	0.0024T	-0.0011	-0.0027	0.0027T
		0.0002L			0.0007T			0.0004T
		0.052T			**0.061T**			**0.068T**
-0.012	**-0.052**	**0.013L**	**-0.036**	**-0.061**	**0.011T**	**-0.028**	**-0.068**	**0.003T**
-0.0005	-0.0020	0.0020T	-0.0014	-0.0024	0.0024T	-0.0011	-0.0027	0.0027T
		0.0005L			0.0004T			0.0001T
		0.060T			**0.070T**			**0.079T**
-0.014	**-0.060**	**0.016L**	**-0.041**	**-0.070**	**0.011T**	**-0.033**	**-0.079**	**0.003T**
-0.0006	-0.0024	0.0024T	-0.0016	-0.0028	0.0028T	-0.0013	-0.0031	0.0031T
		0.0006L			0.0004T			0.0001T
		0.066T			**0.079T**			**0.088T**
-0.014	**-0.066**	**0.021L**	**-0.047**	**-0.079**	**0.012T**	**-0.036**	**-0.088**	**0.001T**
-0.0006	-0.0026	0.0025T	-0.0019	-0.0031	0.0031T	-0.0014	-0.0035	0.0035T
		0.0008L			0.0005T			0.0000T
		0.073T			**0.087T**			**0.098T**
-0.016	**-0.073**	**0.024L**	**-0.051**	**-0.087**	**0.011T**	**-0.041**	**-0.098**	**0.001T**
-0.0006	-0.0029	0.0029T	-0.0020	-0.0034	0.0034T	-0.0016	-0.0039	0.0039T
		0.0010L			0.0004T			0.0000T
		0.080T			**0.095T**			**0.108T**
-0.017	**-0.080**	**0.028L**	**-0.055**	**-0.095**	**0.010T**	**-0.045**	**-0.108**	**0.000T**
-0.0007	-0.0031	0.0031T	-0.0022	-0.0037	0.0037T	-0.0018	-0.0043	0.0043T
		0.0011L			0.0004T			0.0000T
		0.114T			**0.122T**			**0.148T**
-0.044	**-0.114**	**0.006L**	**-0.078**	**-0.122**	**0.028T**	**-0.078**	**-0.148**	**0.028T**
-0.0017	-0.0045	0.0045T	-0.0031	-0.0048	0.0048T	-0.0031	-0.0058	0.0058T
		0.0003L			0.0011T			0.0011T

Continued on next page.

SHAFT AND HOUSING FITS

These charts are guidelines for specifying shaft and housing fits related to particular operating conditions found in table 6 on page 30.

Continued from previous page.

Bearing O.D.			M6			M7			N6		
Nominal (Max.)		Tolerance[1]	Housing Bore		Fit	Housing Bore		Fit	Housing Bore		Fit
Over	Incl.		Max.	Min.		Max.	Min.		Max.	Min.	
mm	**mm**	**mm**	**mm**	**mm**	**mm**	**mm**	**mm**	**mm**	**mm**	**mm**	**mm**
in.	in.	in.	in.	in.	in.	in.	in.	in.	in.	in.	in.
					0.080T			**0.110T**			**0.100T**
630.000	**800.000**	**-0.075**	**-0.030**	**-0.080**	**0.045L**	**-0.030**	**-0.110**	**0.045L**	**-0.050**	**-0.100**	**0.025T**
24.8032	31.4961	-0.0030	-0.0012	-0.0031	0.0031T	-0.0012	-0.0043	0.0043T	-0.0020	-0.0039	0.0039T
					0.0018L			0.0018L			0.0010T
					0.090T			**0.124T**			**0.112T**
800.000	**1000.000**	**-0.100**	**-0.034**	**-0.090**	**0.066L**	**-0.034**	**-0.124**	**0.066L**	**-0.056**	**-0.112**	**0.044T**
31.4961	39.3701	-0.0039	-0.0013	-0.0035	0.0035T	-0.0013	-0.0049	0.0049T	-0.0022	-0.0044	0.0044T
					0.0026L			0.0026L			0.0017T
					0.106T			**0.145T**			**0.132T**
1000.000	**1250.000**	**-0.125**	**-0.040**	**-0.106**	**0.085L**	**-0.040**	**-0.145**	**0.085L**	**-0.066**	**-0.132**	**0.059T**
39.3701	49.2126	-0.0049	-0.0016	-0.0042	0.0042T	-0.0016	-0.0057	0.0057T	-0.0026	-0.0052	0.0052T
					0.0033L			0.0033L			0.0023T
					0.126T			**0.173T**			**0.156T**
1250.000	**1600.000**	**-0.160**	**-0.048**	**-0.126**	**0.112L**	**-0.048**	**-0.173**	**0.112L**	**-0.078**	**-0.156**	**0.082T**
49.2126	62.9921	-0.0063	-0.0019	-0.0050	0.0050T	-0.0019	-0.0068	0.0068T	-0.0031	-0.0061	0.0061T
					0.0044L			0.0044L			0.0032T
					0.150T			**0.208T**			**0.184T**
1600.000	**2000.000**	**-0.200**	**-0.058**	**-0.150**	**0.142L**	**-0.058**	**-0.208**	**0.142L**	**-0.092**	**-0.184**	**0.108T**
62.9921	78.7402	-0.0079	-0.0023	-0.0059	0.0059T	-0.0023	-0.0082	0.0082T	-0.0036	-0.0072	0.0072T
					0.0056L			0.0056L			0.0043T
					0.178T			**0.243**			**0.285T**
2000.000	**2500.000**	**-0.250**	**-0.068**	**-0.178**	**0.182L**	**-0.068**	**-0.243**	**0.182L**	**-0.110**	**-0.220**	**0.140T**
78.7402	98.4252	-0.0098	-0.0027	-0.0070	0.0070T	-0.0027	-0.0096	0.0096T	-0.0043	-0.0087	0.112T
					0.0071L			0.0071L			0.055T

NOTE: Tolerance and shaft diameters are shown in the table as variances from nominal bearing O.D.
[1]Tolerance range is from +0 to value listed.

These charts are guidelines for specifying shaft and housing fits related to particular operating conditions found in table 6 on page 30.

N7			P6			P7		
Housing Bore		Fit	Housing Bore		Fit	Housing Bore		Fit
Max.	Min.		Max.	Min.		Max.	Min.	
mm	**mm**	**mm**	**mm**	**mm**	**mm**	**mm**	**mm**	**mm**
in.	in.	in.	in.	in.	in.	in.	in.	in.
		0.130T			**0.138T**			**0.168T**
-0.050	**-0.130**	**0.025L**	**-0.088**	**-0.138**	**0.013T**	**-0.088**	**-0.168**	**0.013T**
-0.0020	-0.0051	00051T	-0.0035	-0.0054	0.0054T	-0.0035	-0.0066	0.0066T
		0.0010L			0.0005T			0.0005T
		0.146T			**0.156T**			**0.190T**
-0.056	**-0.146**	**0.044L**	**-0.100**	**-0.156**	**0.000T**	**-0.100**	**-0.190**	**0.000T**
-0.0022	-0.0057	0.0057T	-0.0039	-0.0061	0.0061T	-0.0039	-0.0075	0.0075T
		0.0017L			0.0000T			0.0000T
		0.171T			**0.186T**			**0.225T**
-0.066	**-0.171**	**0.059L**	**-0.120**	**-0.186**	**0.005L**	**-0.120**	**-0.225**	**0.005T**
-0.0026	-0.0067	0.0067T	-0.0047	-0.0073	0.0073T	-0.0047	-0.0089	0.0089T
		0.0023L			0.0002L			0.0002T
		0.203T			**0.218T**			**0.265T**
-0.078	**-0.203**	**0.082L**	**-0.140**	**-0.218**	**0.020L**	**-0.140**	**-0.265**	**0.020L**
-0.0031	-0.0080	0.0080T	-0.0055	-0.0086	0.0086T	-0.0055	-0.0104	0.0104T
		0.0023L			0.0008L			0.0008L
		0.242T			**0.262T**			**0.320T**
-0.092	**-0.242**	**0.108L**	**-0.170**	**-0.262**	**0.030L**	**-0.170**	**-0.320**	**0.030L**
-0.0036	-0.0095	0.0095T	-0.0067	-0.0103	0.0103T	-0.0067	-0.0126	0.0126T
		0.0043L			0.0012L			0.0012L
		0.285T			**0.305T**			**0.370T**
-0.110	**-0.285**	**0.140L**	**-0.195**	**-0.305**	**0.055L**	**-0.195**	**-0.370**	**0.055L**
-0.0043	-0.0112	0.0112T	-0.0077	-0.0120	0.0120T	-0.0077	-0.0146	0.0146T
		0.0055L			0.0021L			0.0021L

OPERATING TEMPERATURES

Bearings operate in a wide range of applications and environments. In most cases, bearing operating temperature is not an issue. Some applications, however, operate at extreme speeds or in extreme temperature environments. In these cases, care must be taken not to exceed the temperature limits of the bearing. Minimum temperature limits are primarily based on lubricant capability. Maximum temperature limits are most often based on material and/or lubricant constraints, but also may be based on accuracy requirements of the equipment that the bearings are built into. These constraints/limitations are discussed below.

BEARING MATERIAL LIMITATIONS

Standard bearing steels with a standard heat treatment cannot maintain a minimum hardness of 58 HRC much above 120° C (250° F).

Dimensional stability of Timken bearings is managed through the proper selection of an appropriate heat-treat process. Standard spherical roller bearings are dimensionally stabilized up to 200° C (392° F). Upon request, these bearings can be ordered to higher levels of stability as listed below. These designations are in agreement with DIN Standard 623.

TABLE 13.

Stability Designation	Maximum Operating Temperature	
	°C	°F
S0	150	302
S1	200	392
S2	250	482
S3	300	572
S4	350	662

With dimensionally stabilized product, there still may be some changes in dimensions during service as a result of microstructural transformations. These transformations include the continued tempering of martensite and decomposition of retained austenite. The magnitude of change depends on the operating temperature, the time at temperature and the composition and heat-treatment of the steel.

Temperatures exceeding the limits shown in table 13 require special high-temperature steel. Consult your Timken sales engineer for availability of specific part numbers for non-standard heat stability or high-temperature steel grades.

Suggested materials for use in balls, rings and rollers at various operating temperatures are listed in table 14. Also listed are chemical composition recommendations, hardness recommendations and dimensional stability information.

Operating temperature affects lubricant film thickness and setting, both of which directly influence bearing life. Extremely high temperatures can result in a reduced film thickness that can lead to asperity contact between contacting surfaces.

Operating temperature also can affect performance of cages, seals and shields, which in turn can affect bearing performance. Materials for these components and their operating temperature ranges are shown in table 15.

LUBRICATION LIMITATIONS

Starting torque in grease-lubricated applications typically increases significantly at cold temperatures. Starting torque is not primarily a function of the consistency or channel properties of the grease. Most often, it is a function of the rheological properties of the grease.

The high-temperature limit for greases is generally a function of the thermal and oxidation stability of the base oil in the grease and the effectiveness of the oxidation inhibitors.

See the Lubrication section on page 51 for more information on lubrication limitations.

EQUIPMENT REQUIREMENTS

The equipment designer must evaluate the effects of temperature on the performance of the equipment being designed. Precision machine tool spindles, for example, can be very sensitive to thermal expansions. For some spindles, it is important that the temperature rise over ambient be held to 20° C to 35° C (36° F to 45° F).

Most industrial equipment can operate at considerably higher temperatures. Thermal ratings on gear drives, for example, are based on 93° C (200° F). Equipment such as gas turbines operates continuously at temperatures above 100° C (212° F). Running at high temperatures for extended periods of time, however, may affect shaft and housing fits, if the shaft and housing are not machined and heat-treated properly.

Although bearings can operate satisfactorily up to 120° C (250° F), an upper temperature limit of 80° C to 95° C (176° F to 203° F) is more practical. Higher operating temperatures increase the risk of damage from transient temperature spikes. Prototype testing of the application can help define the operating temperature range and should be conducted, if possible. It is the responsibility of the equipment designer to weigh all relevant factors and make the final determination of satisfactory operating temperature.

Tables 14 and 15 provide standard operating temperatures for common bearing component materials. They should be used for reference purposes only. Other bearing component materials are available on request. Contact your Timken sales engineer for more information.

TABLE 14. OPERATING TEMPERATURES FOR BEARING COMPONENT MATERIALS

Material	Approximate Chemical Analysis %	Temp. °F	Hardness HRC	-73° C -100° F	-54° C -65° F	-17° C 0° F	38° C 100° F	93° C 200° F	121° C 250° F	149° C 300° F	204° C 400° F	260° C 500°F	316° C 600° F	371° C 700° F	427° C 800° F
Low-alloy carbon-chromium bearing steels. 52100 and others per ASTM A295	1C 0.5–1.5Cr 0.35Mn	70	60	STANDARD DIMENSIONAL STABILIZATION <0.0001 in./in dimensional change in 2500 hours at 100° C (212° F). Good oxidation resistance.											
Low-alloy carbon-chromium bearing steels. 52100 and others per ASTM A295	1C 0.5–1.5Cr 0.35Mn	70 350 450	58 56 54	Heat stabilized per FS136, <0.0001in./in dimensional change in 2500 hours at 149° C (300° F). When given a stabilizing heat treatment, A295 steel is suitable for many applications in the 177°-232° C (350-450° F) range; however, it is not as dimensionally stable as it is at temperatures below 177° C (350° F). If utmost stability is required, use materials in the 316° C (600° F) group below.											
Deep-hardening steels for heavy sections per ASTM A485	1C 1–1.8Cr 1–1.5Mn .06Si	70 450 600	58 55 52	As heat-treated and tempered, it is stabilized, <0.0001 in./in dimensional change in 2500 hours at 149° C (300° F).											
Carburizing steels per ASTM A534 a) low alloy 4118, 8X19, 5019, 8620 (Ni-Moly grades) b) high nickel 3310	Ni-Moly: 0.2C, 0.4-2.0Mn, 0.3-0.8Cr, 0-2.0Ni, 0-0.3Mo .0.1C, 1.5Cr, 0.4Mn, 3.5Ni	70	58	Nickel-Moly grades of steel frequently used to achieve extra ductility in inner rings for locking device bearings. 3311 and others used for extra-thick-section rings.											
Corrosion-resistant 440C stainless steel per ASTM A756	1C 18Cr	70	58	Excellent corrosion resistance.											
Corrosion-resistant 440C stainless steel per ASTM A756	1C 18Cr	70 450 600	58 55 52	As heat stabilized for maximum hardness at high temperatures (FS238). Good oxidation resistance at higher temperatures. Note load capacity drops off more rapidly at higher temperatures than M50 shown below, which should be considered if loads are high, <0.0001 in./in dimensional change in 1200 hours.											
M-50 medium high speed	4Cr 4Mo 1V 0.8C	70 450 600	60 59 57	Suggested where stable high hardness at elevated temperature is required, <0.0001 in./in dimensional change in 1200 hours at 316° C (600° F).											

Note: Dimensional stability data shown above is the permanent metallurgical growth and/or shrinkage only. Thermal expansion effects are not included.
For operating temperatures above 427° C (800° F), consult your Timken sales engineer.

TABLE 15. OPERATING TEMPERATURES FOR CAGES, SHIELDS AND SEALS

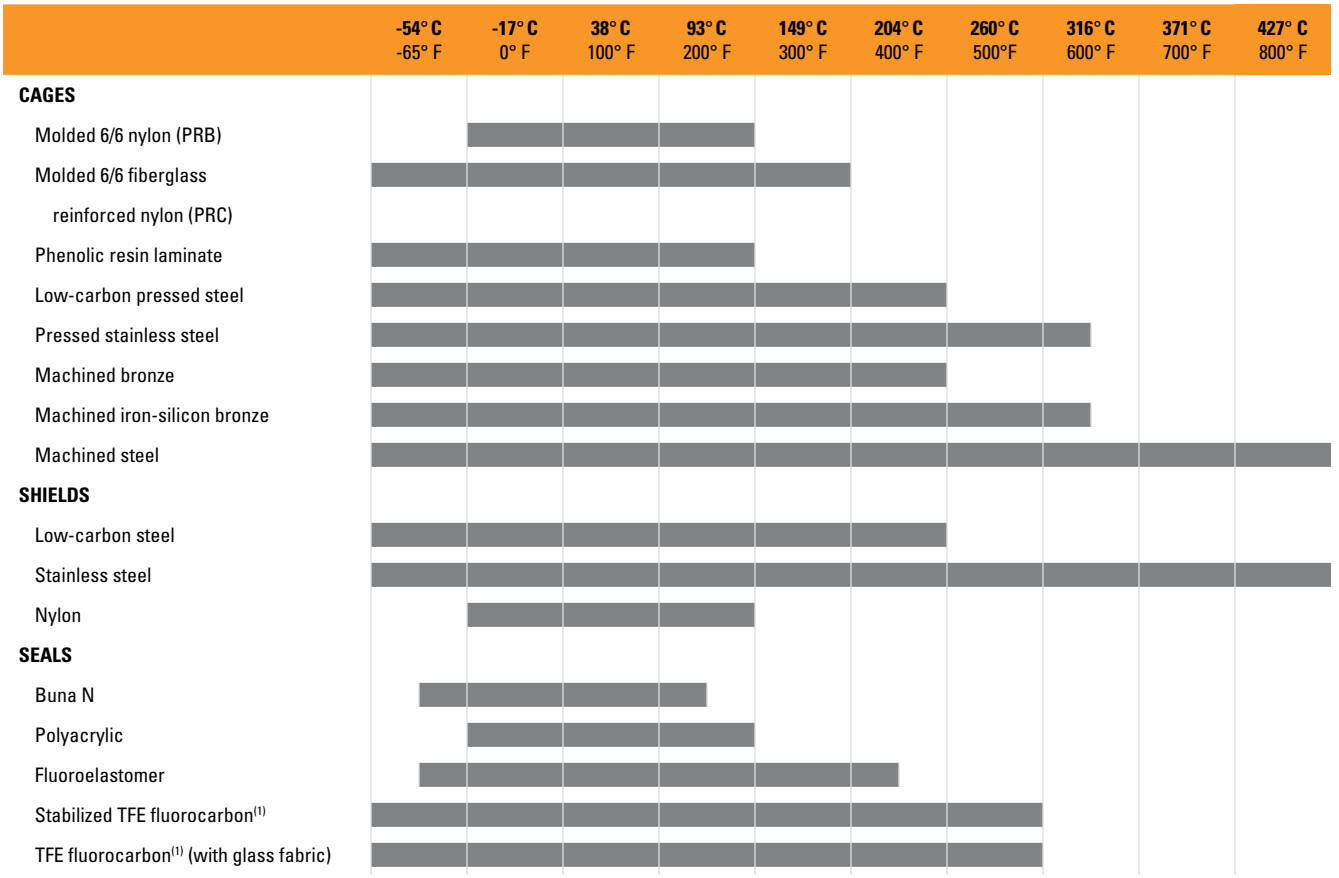

(1)Limited life above these temperatures.

HEAT GENERATION AND DISSIPATION

Bearing operating temperature is dependent upon a number of factors, including heat generation of all contributing heat sources, heat flow rate between sources and the ability of the system to dissipate the heat. Heat sources include such things as bearings, seals, gears, clutches and oil supply. Heat dissipation is affected by many factors, including shaft and housing materials and designs, lubricant circulation and external environmental conditions. These and other factors are discussed in the following sections.

HEAT GENERATION

Under normal operating conditions, most of the torque and heat generated by the bearing is caused by the elastohydrodynamic losses at the roller/ring contacts.

Heat generation is the product of bearing torque and speed. The following equation is used to calculate the heat generated.

$$Q_{gen} = k_4 n M$$

If the bearing is a spherical roller bearing, the torque calculations are given in the subsequent sections.

HEAT DISSIPATION

The problem of determining the heat flow from a bearing in a specific application is rather complex. In general, it can be said that factors affecting the rate of heat dissipation include the following:

1. Temperature gradient from the bearing to the housing. This is affected by size configuration of the house and any external cooling such as fans, water cooling or fan action of the rotating components.
2. Temperature gradient from the bearing to the shaft. Any other heat sources, such as gears and additional bearings and their proximity to the bearing considered, will influence the temperature of the shaft.
3. The heat carried away by a circulating oil system.

To what extent nos. 1 and 2 can be controlled will depend on the application. The heat-dissipation modes include conduction through the system, convection along the inside and outside surfaces of the system, as well as radiation exchange to and from neighboring structures. In many applications, overall heat dissipation can be divided into two categories – heat removed by circulating oil and heat removed through the structure.

Heat dissipation by circulating oil

The amount of heat removed by the lubricant can be controlled more easily. In a splash lubrication system, cooling coils may be used to control the bulk oil temperature.

The amount of heat carried away in a circulating oil system by the lubricant can be approximated from the following equations.

$$Q_{oil} = k_6 C_p \rho f (\theta_o - \theta_i)$$

Where:

k_6 = 1.67×10^{-5} for Q_{oil} in W
= 1.67×10^{-2} for Q_{oil} in Btu/min

If the circulating lubricant is petroleum oil, the heat removed is further approximated by the following:

$$Q_{oil} = k_5 f (\theta_o - \theta_i)$$

The following factors apply to the heat generation and dissipation equations listed on this page.

Where:

k_5 = 28 for Q_{oil} in W when f in L/min and θ in °C
= 0.42 for Q_{oil} in Btu/min when f in U.S. pt/min and θ in °F

TORQUE

RUNNING TORQUE-M

The rotational resistance of a rolling bearing is dependent on load, speed, lubrication conditions and bearing internal characteristics.

The following formulas yield approximations to values of bearing running torque. The formulas apply to bearings lubricated by oil. For bearings lubricated by grease or oil mist, torque is usually lower, although for grease lubrication this depends on amount and consistency of the grease. The formulas also assume the bearing running torque has stabilized after an initial period referred to as "running-in."

SPHERICAL ROLLER BEARINGS

The torque equations for spherical roller bearings are given as follows, where the coefficients are based on series and found in the following table:

$$M = \begin{cases} f_1 F_\beta dm + 10^{-7} f_0 (v \times n)^{2/3} dm^3 & \text{if } (v \times n) \geq 2000 \\ f_1 F_\beta dm + 160 \times 10^{-7} f_0 dm^3 & \text{if } (v \times n) < 2000 \end{cases}$$

Again, note that the viscosity is in units of centistokes. The load term (F_β) is dependent on bearing type as follows:

Radial spherical roller: $F_\beta = \max \begin{pmatrix} 0.8F_a \cot \alpha \\ \text{or} \\ F_r \end{pmatrix}$

TABLE 16. COEFFICIENTS FOR THE TORQUE EQUATION

Bearing Type	Dimension Series	f_0	f_1
Spherical roller bearings	30	4.5	0.00017
	39	4.5	0.00017
	40	6.5	0.00027
	31	5.5	0.00027
	41	7	0.00049
	22	4	0.00019
	32	6	0.00036
	23	4.5	0.00030

LUBRICATION

To help maintain a bearing's antifriction characteristics, lubrication is needed to:

- Minimize rolling resistance caused by deformation of the rolling elements and raceway under load by separating the mating surfaces.
- Minimize sliding friction occurring between rolling elements, raceways and cage.
- Transfer heat (with oil lubrication).
- Protect from corrosion and, with grease lubrication, from contaminant ingress.

The wide range of bearing types and operating conditions precludes any simple, all-inclusive statement or guideline allowing the selection of the proper lubricant. At the design level, the first consideration is whether oil or grease is best for the particular operation. The advantages of oil and grease are outlined in the table below. When heat must be carried away from the bearing, oil must be used. It is almost always preferred for very high-speed applications.

TABLE 17. ADVANTAGES OF OIL AND GREASE

Oil	Grease
Carries heat away from the bearings	Simplifies seal design and acts as a sealant
Carries away moisture and particulate matter	Permits prelubrication of sealed or shielded bearings
Easily controlled lubrication	Generally requires less frequent lubrication

European REACH compliance

Timken-branded lubricants, greases and similar products sold in stand-alone containers or delivery systems are subject to the European REACH (**R**egistration, **E**valuation, **A**uthorization and Restriction of **CH**emicals) directive. For import into the European Union, Timken can sell and provide only those lubricants and greases that are registered with ECHA (European CHemical Agency). For further information, please contact your Timken sales engineer.

OIL LUBRICATION

Oils used for bearing lubrication should be high-quality mineral oils or synthetic oils with similar properties. Selection of the proper type of oils depends on bearing speed, load, operating temperature and lubrication method. Some features and advantages of oil lubrication, in addition to the above are:

- Oil is a better lubricant for high speeds or high temperatures. It can be cooled to help reduce bearing temperature.
- It is easier to handle and control the amount of lubricant reaching the bearing. It is harder to retain in the bearing. Lubricant losses may be higher than with grease.
- Oil can be introduced to the bearing in many ways, such as drip-feed, wick-feed, pressurized circulating systems, oil bath or air-oil mist. Each is suited for certain types of applications.
- Oil is easier to keep clean for recirculating systems.

Oil may be introduced to the bearing housing in many ways. The most common systems are:

- **Oil bath.** The housing is designed to provide a sump through which the rolling elements of the bearing will pass. Generally, the oil level should be no higher than the center point of the lowest rolling element. If speed is high, lower oil levels should be used to reduce churning. Gages or controlled elevation drains are used to achieve and maintain the proper oil level.
- **Circulating system.** This system has the advantages of:
  - An adequate supply of oil for both cooling and lubrication.
  - Metered control of the quantity of oil delivered to each bearing.
  - Removal of contaminants and moisture from the bearing by flushing action.
  - Suitability for multiple bearing installations.
  - Large reservoir, which reduces deterioration. Increased lubricant life provides economical efficiency.
  - Incorporation of oil-filtering devices.
  - Positive control to deliver the lubricant where needed.
  - A typical circulating oil system consists of an oil reservoir, pump, piping and filter. A heat exchange may be required.
- **Oil-mist lubrication.** Oil-mist lubrication systems are used in high-speed, continuous-operation applications. This system permits close control of the amount of lubricant reaching the bearings. The oil may be metered, atomized by compressed air and mixed with air, or it may be picked up from a reservoir using a venturi effect. In either case, the air is filtered and supplied under sufficient pressure to assure adequate lubrication of the bearings. Control of this type of lubrication system is accomplished by monitoring the operating temperatures of the bearings being lubricated. The continuous passage of the pressurized air and oil through the labyrinth seals used in the system prevents the entrance of contaminants from the atmosphere to the system.

The successful operation of this type of system is based upon the following factors:

- Proper location of the lubricant entry ports in relation to the bearings being lubricated.
- Avoidance of excessive pressure drops across void spaces within the system.
- Proper air pressure and oil quantity ratio to suit the particular application.
- Adequate exhaust of the air-oil mist after lubrication has been accomplished.

To ensure "wetting" of the bearings, and to prevent possible damage to the rolling elements and rings, it is imperative that the oil-mist system be turned on for several minutes before the equipment is started. The importance of "wetting" the bearing before starting cannot be overstated, and it also has particular significance for equipment that has been idled for extended periods of time.

Lubricating oils are commercially available in many forms for automotive, industrial, aircraft and other uses. Oils are classified as either petroleum types (refined from crude oil) or synthetic types (produced by chemical synthesis).

PETROLEUM OILS

Petroleum oils are made from a petroleum hydrocarbon derived from crude oil, with additives to improve certain properties. Petroleum oils are used for nearly all oil-lubricated applications of bearings.

SYNTHETIC OILS

Synthetic oils cover a broad range of categories and include polyalphaolefins, silicones, polyglycols and various esters. In general, synthetic oils are less prone to oxidation and can operate at extreme hot or cold temperatures. Physical properties, such as pressure-viscosity coefficients, tend to vary between oil types; use caution when making oil selections.

The polyalphaolefins (PAO) have a hydrocarbon chemistry that parallels petroleum oil both in chemical structures and pressure-viscosity coefficients. Therefore, PAO oil is mostly used in the oil-lubricated applications of bearings when severe temperature environments (hot and cold) are encountered or when extended lubricant life is required.

The silicone, ester and polyglycol oils have an oxygen-based chemistry that is structurally quite different from petroleum oils and PAO oils. This difference has a profound effect on its physical properties where pressure-viscosity coefficients can be lower compared to mineral and PAO oils. This means that these types of synthetic oils may actually generate a smaller elastohydrodynamic (EHD) film thickness than a mineral or PAO oil of equal viscosity at operating temperature. Reductions in bearing fatigue life and increases in bearing wear could result from this reduction of lubricant film thickness.

VISCOSITY

The selection of oil viscosity for any bearing application requires consideration of several factors: load, speed, bearing setting, type of oil and environmental factors. Since oil viscosity varies inversely with temperature, a viscosity value must always be stated with the temperature at which it was determined. High-viscosity oil is used for low-speed or high-ambient-temperature applications. Low-viscosity oil is used for high-speed or low-ambient-temperature applications.

There are several classifications of oils based on viscosity grades. The most familiar are the Society of Automotive Engineers (SAE) classifications for automotive engine and gear oils. The American Society for Testing and Materials (ASTM) and the International Organization for Standardization (ISO) have adopted standard viscosity grades for industrial fluids. Fig. 19 shows the viscosity comparisons of ISO/ASTM with SAE classification systems at 40° C (104° F).

VISCOSITY CLASSIFICATION COMPARISON

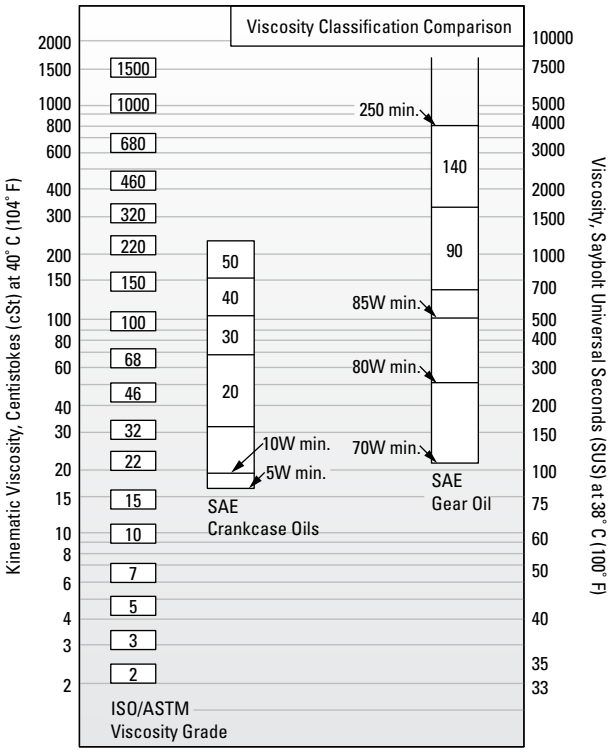

Fig. 19. Comparison between ISO/ASTM grades (ISO 3448/ASTM D2442) and SAE grades (SAE J 300-80 for crankcase oils, SAE J 306-81 for axle and manual transmission oils).

The ASTM/ISO viscosity grade system for industrial oils is depicted below.

ISO VISCOSITY SYSTEM

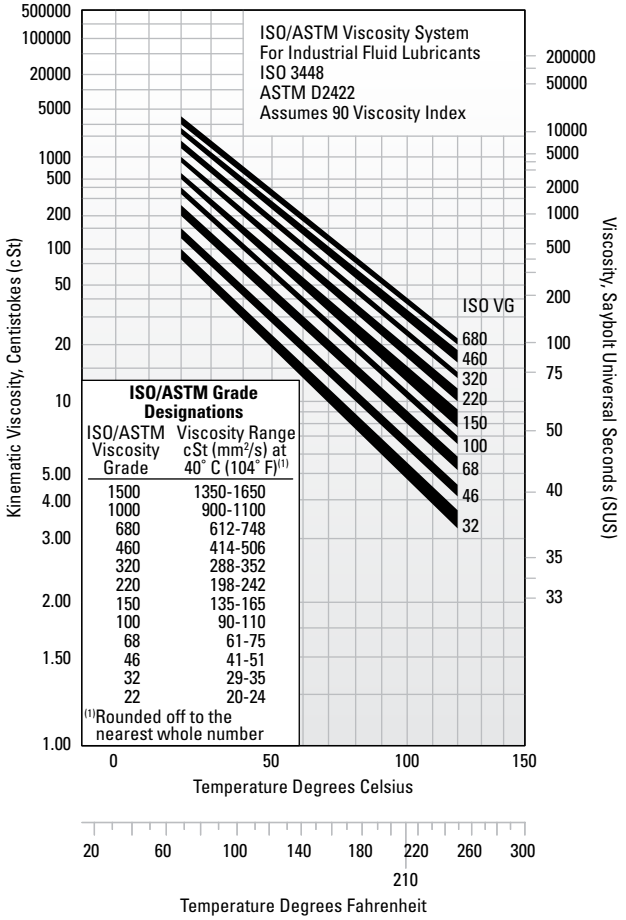

Fig. 20. Viscosity grade system for industrial oils.

TYPICAL BEARING LUBRICATION OILS

In this section, the properties and characteristics of lubricants for typical roller bearing applications are listed. These general characteristics are derived from successful performance in applications across all industries.

General-purpose rust and oxidation lubricating oil

General-purpose rust and oxidation (R&O) inhibited oils are the most common type of industrial lubricant. They are used to lubricate Timken® bearings in all types of industrial applications where conditions requiring special considerations do not exist.

TABLE 18. SUGGESTED GENERAL PURPOSE R&O LUBRICATING OIL PROPERTIES

	Properties
Base stock	Solvent-refined, high viscosity-index petroleum oil
Additives	Corrosion and oxidation inhibitors
Viscosity index	80 min.
Pour point	-10° C max. (14° F)
Viscosity grades	ISO/ASTM 32 through 220

Some low-speed and/or high-ambient-temperature applications require the higher viscosity grades. High-speed and/or low-temperature applications require the lower viscosity grades.

Industrial extreme-pressure (EP) gear oil

Extreme-pressure gear oils are used to lubricate Timken bearings in most types of heavily loaded industrial equipment. They should be capable of withstanding abnormal shock loads that are common in heavy-duty equipment.

TABLE 19. SUGGESTED INDUSTRIAL EP GEAR OIL PROPERTIES

	Properties
Base stock	Solvent-refined, high viscosity-index petroleum oil
Additives	Corrosion and oxidation inhibitors Extreme-pressure (EP) additive(1) - 15.8 kg (35 lb.) min.
Viscosity index	80 min.
Pour point	-10° C max. (14° F)
Viscosity grades	ISO/ASTM 100, 150, 220, 320, 460

(1)ASTM D 2782

Industrial EP gear oils should be composed of a highly refined petroleum oil-based stock plus appropriate inhibitors and additives. They should not contain materials that are corrosive or abrasive to bearings. The inhibitors should provide long-term protection from oxidation and protect the bearing from corrosion in the presence of moisture. The oils should resist foaming in service and have good water-separation properties. An EP additive protects against scoring under boundary-lubrication conditions. The viscosity grades suggested represent a wide range. High-temperature and/or slow-speed applications generally require the higher viscosity grades. Low temperatures and/or high speeds require the use of lower viscosity grades.

GREASE LUBRICATION

Grease lubrication is generally applicable to low-to-moderate speed applications that have operating temperatures within the limits of the grease. There is no universal antifriction bearing grease. Each grease has limiting properties and characteristics.

Greases consist of a base oil, a thickening agent and additives. Conventionally, bearing greases have consisted of petroleum base oils thickened to the desired consistency by some form of metallic soap. More recently synthetic base oils have been used with organic and inorganic thickeners. Table 20 summarizes the composition of typical lubricating greases.

TABLE 20. COMPOSITION OF GREASES

Base Oil	+	Thickening Agents	+	Additives	=	Lubricating Grease
Mineral oil		Soaps and complex soaps lithium, aluminum, barium, calcium		Rust inhibitors		
Synthetic hydrocarbon				Dyes		
Esters		Non-Soap (inorganic) microgel (clay), carbon black, silica-gel, PTFE		Tactifiers		
Perflironiated oil				Metal deactivates		
Silicone				Oxidation inhibitors		
		Non-Soap (organic) Urea compounds		Anti-wear EP		

Calcium- and aluminum-based greases have excellent water resistance and are used in industrial applications where water ingress is an issue. Lithium-based greases are multi-purpose and are used in industrial applications and wheel bearings.

Synthetic base oils such as esters, organic esters and silicones used with conventional thickeners and additives typically have higher maximum operating temperatures than petroleum-based greases. Synthetic greases can be designed to operate in temperatures from -73° C (-100° F) to 288° C (550° F).

Below are the general characteristics of common thickeners used with petroleum base oils.

TABLE 21. GENERAL CHARACTERISTICS OF THICKENERS USED WITH PETROLEUM-BASED OILS

Thickener	Typical Dropping Point		Maximum Temperature		Typical Water Resistance
	°C	°F	°C	°F	
Lithium soap	**193**	380	**121**	250	Good
Lithium complex	**260+**	500+	**149**	300	Good
Aluminum complex	**249**	480	**149**	300	Excellent
Calcium sulfonate	**299**	570	**177**	350	Excellent
Polyurea	**260**	500	**149**	300	Good

Use of the thickeners in table 21 with synthetic hydrocarbon or ester base oils increases the maximum operating temperature by approximately 10° C (50° F).

Using polyurea as a thickener for lubricating fluids is one of the most significant lubrication developments in more than 30 years. Polyurea grease performance is outstanding in a wide range of bearing applications and, in a relatively short time, it has gained acceptance as a factory-packed lubricant for ball bearings.

LOW TEMPERATURES

Starting torque in a grease-lubricated bearing at low temperatures can be critical. Some greases may function adequately as long as the bearing is operating, but resistance to initial movement may be excessive. In certain smaller machines, starting may be impossible when very cold. Under such operating circumstances, greases containing low-temperature characteristic oils are generally required.

If the operating temperature range is wide, synthetic greases offer advantages. Synthetic greases are available to provide very low starting and running torque at temperatures as low as -73° C (-100° F). In certain instances, these greases perform better in this respect than oil.

An important point concerning lubricating greases is that the starting torque is not necessarily a function of the consistency or the channel properties of the grease. Starting torque is more a function of the individual rheological properties of a particular grease and is best evaluated by application experience.

HIGH TEMPERATURES

The high temperature limit for lubricating greases is generally a function of the thermal and oxidation stability of the fluid and the effectiveness of the oxidation inhibitors. Grease temperature ranges are defined by both the dropping point of the grease thickener and composition of the base oil. Table 22 shows the temperature ranges of various base oils used in grease formulations.

A rule of thumb, developed from years of testing grease-lubricated bearings, indicates that grease life is halved for every 10° C (50° F) increase in temperature. For example, if a particular grease provides 2000 hours of life at 90° C (194° F), by raising the temperature to 100° C (212° F), reduction in life to approximately 1000 hours would result. On the other hand, 4000 hours could be expected by lowering the temperature to 80° C (176° F).

Thermal stability, oxidation resistance and temperature limitations must be considered when selecting greases for high-temperature applications. In non-relubricatable applications, highly refined mineral oils or chemically stable synthetic fluids are required as the oil component of greases for operation at temperatures above 121° C (250° F).

TABLE 22. TEMPERATURE RANGES FOR BASE OILS USED IN LUBRICATING GREASES

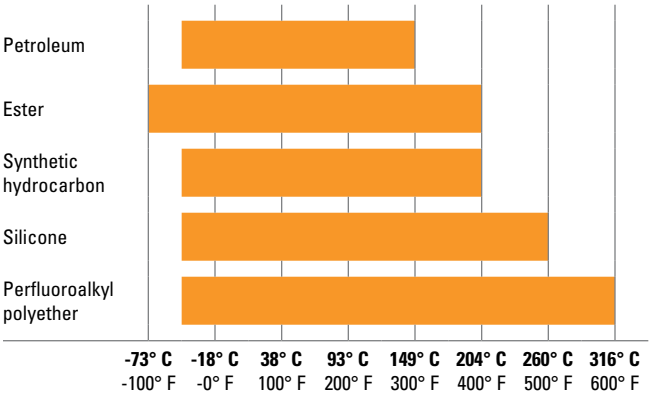

CONTAMINATION

Abrasive Particles

When roller bearings operate in a clean environment, the primary cause of damage is the eventual fatigue of the surfaces where rolling contact occurs. However, when particle contamination enters the bearing system, it is likely to cause damage such as bruising, which can shorten bearing life.

When dirt from the environment or metallic wear debris from some component in the application are allowed to contaminate the lubricant, wear can become the predominant cause of bearing damage. If bearing wear becomes significant, changes will occur to critical bearing dimensions that could adversely affect machine operation.

Bearings operating in a contaminated lubricant exhibit a higher initial rate of wear than those running in an uncontaminated lubricant. With no further contaminant ingress, this wear rate quickly diminishes. The contamination particles are reduced in size as they pass through the bearing contact area during normal operation.

Water

Water and moisture can be particularly conducive to bearing damage. Lubricating greases may provide a measure of protection from this contamination. Certain greases, such as calcium and aluminum-complex, are highly water-resistant. Sodium-soap greases are water-soluble and should not be used in applications involving water.

Either dissolved or suspended water in lubricating oils can exert a detrimental influence on bearing fatigue life. Water can cause bearing etching that also can reduce bearing fatigue life. The exact mechanism by which water lowers fatigue life is not fully understood. It has been suggested that water enters micro-cracks in the bearing rings that are caused by repeated stress cycles. This leads to corrosion and hydrogen embrittlement in the micro-cracks, reducing the time required for these cracks to propagate to an unacceptable-sized spall.

Water-based fluids, such as water glycol and invert emulsions, also have shown a reduction in bearing fatigue life. Although water from these sources is not the same as contamination, the results support the previous discussion concerning water-contaminated lubricants.

GREASE SELECTION

The successful use of bearing grease depends on the physical and chemical properties of the lubricant as well as application and environmental conditions. Because the choice of grease for a particular bearing under certain service conditions is often difficult to make, you should consult with your lubricant supplier or equipment maker for specific questions about lubrication requirements for your application. You also can contact your Timken sales engineer for general lubrication guidelines for any application.

Grease must be carefully selected with regard to its consistency at operating temperature. It should not exhibit thickening, separation of oil, acid formation or hardening to any marked degree. It should be smooth, non-fibrous and entirely free from chemically active ingredients. Its dropping point should be considerably higher than the operating temperature.

Timken® application-specific lubricants were developed by leveraging our knowledge of tribology and antifriction bearings, and how these two elements affect overall system performance. Timken lubricants help bearings and related components operate effectively in demanding industrial operations. High-temperature, anti-wear and water-resistant additives offer superior protection in challenging environments. Table 23 provides an overview of the Timken greases available for general applications. Contact your Timken sales engineer for a more detailed publication on Timken lubrication solutions.

TABLE 23. GREASE LUBRICATION SELECTION GUIDE

ENVIRONMENT		APPLICATION
High Wear • Moderate Loads Moderate Speeds Moderate Temperatures	Timken Premium All-Purpose Industrial LC-2 Grease	Agriculture • Bushings/Ball Joints Truck and Auto Wheel Bearings Heavy Duty Industrial
Extreme Heat • Heavy Loads High Sliding Wear Dirty Environments Slow Speeds • Shock Loading	Timken Construction and Off-Highway Grease	Agriculture/Mining • Cement Plants Construction/Off Road • Rock Quarry Earth Moving Equipment Fleet Equipment • Heavy Industry Pivot Pins/Splined Shafts
Wet and Corrosive Conditions Quiet Environments • Light Loads Moderate to High Speeds Moderate Temperatures	Timken Ball Bearing Pillow Block Grease	Lightly Loaded Pillow Blocks Idler Pulleys • Oven Conveyors Electric Motors • Fans • Pumps
Corrosive Media • Extreme Heat Heavy Loads • Wet Conditions Slow to Moderate Speeds	Timken Mill Grease	Aluminum Mills • Paper Mills Steel Mills • Offshore Rigs Power Generation
Incidental Food Contact Hot and Cold Temperatures Moderate to High Speeds Medium Loads	Timken Food Safe Grease	Food and Beverage Industries Pharmaceuticals *only for ball bearing applications*
Extreme Low and High Temperatures Severe Loads Corrosive Media Slow to Moderate Speeds	Timken Synthetic Industrial LC-1.5 Grease	Wind Energy Main Bearing Pulp and Paper Machines General Heavy Industry Marine Applications Centralized Grease Systems
Moderate Speeds Light to Moderate Loads Moderate Temperatures Moderate Water	Timken Multi-Use Lithium EP1 and EP2 Grease	General Industrial Applications Pins and Bushings • Track Rollers Water Pumps Plain and Antifriction Bearings
Extreme Load • High Wear Moderate Speed High Temperatures • Shock Loading	Timken High-Performance Roller Housed Unit Grease	Metals • Mining • Aggregate Power Generation Material Handling Heavy Industry

This selection guide is not intended to replace the specifications by the equipment builder, who is responsible for its performance.

Many bearing applications require lubricants with special properties or lubricants formulated specifically for certain environments, such as:

- Friction oxidation (fretting corrosion).
- Chemical and solvent resistance.
- Food handling.

For assistance with these or other areas requiring special lubricants, consult your Timken sales engineer.

GREASE USE GUIDELINES

It is important to use the proper amount of grease in the application. In typical industrial applications, the bearing cavity should be kept approximately one-third to one-half full. Less grease may result in the bearing being starved for lubrication. More grease may result in churning. Both conditions may result in excessive heat generation. As the grease temperature rises, viscosity decreases and the grease becomes thinner. This can reduce the lubricating effect and increase leakage of the grease from the bearing. It also may cause the grease components to separate, leading to a general breakdown of the lubricant properties. As the grease breaks down, bearing torque increases. In the case of excess grease resulting in churning, torque may also increase due to the resistance caused by the grease.

For best results, there should be ample space in the housing to allow room for excess grease to be thrown from the bearing. However, it is equally important that the grease be retained all around the bearing. If a large void exists between the bearings, grease closures should be used to prevent the grease from leaving the bearing area.

Only in low-speed applications may the housing be entirely filled with grease. This method of lubrication is a safeguard against the entry of foreign matter, where sealing provisions are inadequate for exclusion of contaminants or moisture.

During periods of non-operation, it is often wise to completely fill the housings with grease to protect the bearing surfaces. Prior to restarting operation, remove the excess grease and restore the proper level.

Applications utilizing grease lubrication should have a grease fitting and a vent at opposite ends of the housing near the top. A drain plug should be located near the bottom of the housing to allow the old grease to purge from the bearing.

Bearings should be relubricated at regular intervals to help prevent damage. Relubrication intervals are difficult to determine. If plant practice or experience with other applications is not available, consult your lubricant supplier.

Timken offers a range of lubricants to help bearings and related components operate effectively in demanding industrial operations. High-temperature, anti-wear and water-resistant additives offer greater protection in challenging environments. Timken also offers a line of single- and multi-point lubricators to simplify grease delivery.

Fig. 21. Grease can easily be packed by hand.

Fig. 22. Mechanical grease packer.

Grease application methods

Grease, in general, is easier to use than oil in industrial bearing lubrication applications. Most bearings that are initially packed with grease require periodic relubrication to operate efficiently.

Grease should be packed into the bearing so that it gets between the rolling elements – the rollers or balls. For tapered roller bearings, forcing grease through the bearing from the large end to the small end will ensure proper distribution.

Grease can be easily packed into small- and medium-size bearings by hand (fig. 21). In shops where bearings are frequently regreased, a mechanical grease packer that forces grease through the bearing under pressure may be appropriate (fig. 22). Regardless of the method, after packing the internal areas of the bearing, a small amount of grease also should be smeared on the outside of the rollers or balls.

The two primary considerations that determine the relubrication cycle are operating temperature and sealing efficiency. High-operating-temperature applications generally require more frequent regreasing. The less efficient the seals, the greater the grease loss and the more frequently grease must be added.

Grease should be added any time the amount in the bearing falls below the desired amount. The grease should be replaced when its lubrication properties have been reduced through contamination, high temperature, water, oxidation or any other factors. For additional information on appropriate regreasing cycles, consult with the equipment manufacturer or your Timken sales engineer.

CONSISTENCY

Greases may vary in consistency from semi-fluids that are hardly thicker than a viscous oil to solid grades almost as hard as a soft wood.

Consistency is measured by a penetrometer in which a standard weighted cone is dropped into the grease. The distance the cone penetrates (measured in tenths of a millimeter in a specific time) is the penetration number.

The National Lubricating Grease Institute (NLGI) classification of grease consistency is shown below:

TABLE 24. NLGI CLASSIFICATIONS

NLGI Grease Grades	Penetration Number
0	355-385
1	310-340
2	265-295
3	220-250
4	175-205
5	130-160
6	85-115

Grease consistency is not fixed; it normally becomes softer when sheared or “worked.” In the laboratory, this “working” is accomplished by forcing a perforated plate up and down through a closed container of grease. This “working” does not compare with the violent shearing action that takes place in a bearing and does not necessarily correlate with actual performance.

TABLE 25. GREASE COMPATIBILITY CHART

■ = Best Choice
■ = Compatible
■ = Borderline
■ = Incompatible

	Aluminum Complex	Barium Complex	Calcium Stearate	Calcium 12 Hydroxy	Calcium Complex	Calcium Sulfonate	Clay Non-Soap	Lithium Stearate	Lithium 12 Hydroxy	Lithium Complex	Polyurea Conventional	Polyurea Shear Stable
Aluminum Complex	Best Choice	Incompatible	Incompatible	Compatible	Incompatible	Borderline	Incompatible	Incompatible	Incompatible	Compatible	Incompatible	Compatible
Timken Food Safe Grease	Best Choice	Incompatible	Incompatible	Compatible	Incompatible	Borderline	Incompatible	Incompatible	Incompatible	Compatible	Incompatible	Compatible
Barium Complex	Incompatible	Best Choice	Incompatible	Compatible	Incompatible	Compatible	Incompatible	Incompatible	Incompatible	Incompatible	Incompatible	Borderline
Calcium Stearate	Incompatible	Incompatible	Best Choice	Compatible	Incompatible	Compatible	Compatible	Compatible	Borderline	Compatible	Incompatible	Compatible
Calcium 12 Hydroxy	Compatible	Compatible	Compatible	Best Choice	Borderline	Borderline	Compatible	Compatible	Compatible	Compatible	Incompatible	Compatible
Calcium Complex	Incompatible	Incompatible	Incompatible	Borderline	Best Choice	Incompatible	Incompatible	Incompatible	Incompatible	Compatible	Compatible	Compatible
Calcium Sulfonate	Borderline	Compatible	Compatible	Borderline	Incompatible	Best Choice	Incompatible	Borderline	Borderline	Compatible	Incompatible	Compatible
Timken Construction and Off-Highway Grease	Borderline	Compatible	Compatible	Borderline	Incompatible	Best Choice	Incompatible	Borderline	Borderline	Compatible	Incompatible	Compatible
Timken Mill Grease	Borderline	Compatible	Compatible	Borderline	Incompatible	Best Choice	Incompatible	Borderline	Borderline	Compatible	Incompatible	Compatible
Clay Non-Soap	Incompatible	Incompatible	Compatible	Compatible	Incompatible	Incompatible	Best Choice	Incompatible	Incompatible	Incompatible	Incompatible	Borderline
Lithium Stearate	Incompatible	Incompatible	Compatible	Compatible	Incompatible	Borderline	Incompatible	Best Choice	Compatible	Compatible	Incompatible	Compatible
Lithium 12 Hydroxy	Incompatible	Incompatible	Borderline	Compatible	Incompatible	Borderline	Incompatible	Compatible	Best Choice	Compatible	Incompatible	Compatible
Timken Multi-Use	Incompatible	Incompatible	Borderline	Compatible	Incompatible	Borderline	Incompatible	Compatible	Best Choice	Compatible	Incompatible	Compatible
Lithium Complex	Compatible	Incompatible	Compatible	Compatible	Compatible	Compatible	Incompatible	Compatible	Compatible	Best Choice	Incompatible	Compatible
Timken All -Purpose Timken Synthetic	Compatible	Incompatible	Compatible	Compatible	Compatible	Compatible	Incompatible	Compatible	Compatible	Best Choice	Incompatible	Compatible
High Performance Roller Housed Unit Grease	Compatible	Incompatible	Compatible	Compatible	Compatible	Compatible	Incompatible	Compatible	Compatible	Best Choice	Incompatible	Compatible
Timken Premium All Purpose Industrial LC-2 Grease	Compatible	Incompatible	Compatible	Compatible	Compatible	Compatible	Incompatible	Compatible	Compatible	Best Choice	Incompatible	Compatible
Polyurea Conventional	Incompatible	Incompatible	Incompatible	Incompatible	Compatible	Incompatible	Incompatible	Incompatible	Incompatible	Incompatible	Best Choice	Compatible
Polyurea Shear Stable	Compatible	Borderline	Compatible	Compatible	Compatible	Compatible	Borderline	Compatible	Compatible	Compatible	Compatible	Best Choice
Timken Pillow Block	Compatible	Borderline	Compatible	Compatible	Compatible	Compatible	Borderline	Compatible	Compatible	Compatible	Compatible	Best Choice

GREASE LUBRICATIONS FOR BEARING/HOUSING ASSEMBLIES

Polyurea and lithium-based greases are normally preferred for general-purpose bearing lubrication and are advantageous in high moisture applications. Both greases have good water-resistant characteristics. For temperature ranges of standard greases, see table 22.

The grease must be carefully selected with regard to its consistency at operating temperature. It should not exhibit thickening, separation of oil, acid formation or hardening to any marked degree. It should be smooth, non-fibrous and entirely free from chemically active ingredients. Its melting point should be considerably higher than the operating temperature. In cases of extreme load or very low operating speeds, extreme pressure additives (EP) that retard adhesive wear should be considered.

Frictional torque is influenced by the quantity and the quality of lubricant present. Excessive quantities of grease cause churning. The adverse effects of churn are accelerated with increases in operating speed. The churn results in excessive temperatures, separation of the grease components, and breakdown in lubrication values. In normal-speed applications, the housings should be kept approximately one-third to one-half full. Only in low-speed applications may the housing be entirely filled with grease. This method of lubrication is a safeguard against the entry of foreign matter, where sealing provisions are inadequate for exclusion of contaminants or moisture.

During periods of non-operation, it is often wise to completely fill the housings with grease to protect the bearing surfaces. Prior to subsequent operation, the excess grease should be removed and the proper level restored. Applications utilizing grease lubrication should have a grease fitting and a vent at opposite ends of the housing near the top. A drain plug should be located near the bottom of the housing to allow purging of the old grease from the bearing. Relubricate at regular intervals to prevent damage to the bearing. Relubrication intervals are difficult to determine. If plant practice or experience with other applications is not available, consult your lubricant supplier.

NOTE

Mixing greases can result in improper bearing lubrication. Always follow the specific lubrication instructions of your equipment supplier.

MULTI-PURPOSE INDUSTRIAL GREASE

These are typical of greases that can be used to lubricate many Timken bearing applications in all types of standard equipment.

Special consideration should be given to applications where speed, load, temperature or environmental conditions are extreme.

TABLE 26. SUGGESTED LITHIUM SOAP, LITHIUM COMPLEX AND CALCIUM SULFONATE GREASE PROPERTIES

Thickener type	Lithium Complex, or equivalent
Consistency	NLGI No.1 or No. 2
Additives	Anti-wear, corrosion and oxidation inhibitors
Base oil	Mineral oil or synthetic
Viscosity at 40° C	ISO VG 150-220
Viscosity index	80 min.
Pour point	-18° C max.

Lithium greases, lithium complex greases, or calcium sulfonate thickened grease are suitable for most centralized, single-point, or manually lubricated product. They should be a smooth, homogeneous and uniform, premium-quality product composed of mineral or synthetic oil, a thickener and appropriate inhibitors. They should not contain materials that are corrosive or abrasive to roller bearings. The grease should have excellent mechanical and chemical stability. The grease should contain inhibitors to provide long-term protection against oxidation in high-performance applications and protect the bearings from corrosion in the presence of moisture. The suggested base oil viscosity covers a fairly wide range. Lower viscosity products should be used in high-speed and/or lightly loaded applications to minimize heat generation and torque. Higher viscosity products should be used in moderate- to low-speed applications and under heavy loads to maximize lubricant film thickness. Speed ratings are listed for each size/class part number in the SPHERICAL ROLLER BEARING section (pages 66-93) of the catalog. When application speeds exceed 70 percent of grease speed rating, consider increasing RIC by one ISO clearance range (CNormal to C3). Never mix greases (type or manufacturer). Incompatibility can inhibit proper lubrication. Table 25 is provided as a reference for typical grease thickener compatibilities. Consult your lubricant supplier for further information for your specific requirement. For general industrial applications, consider a grease that is NLGI No. 1 or No. 2, with a ISO 150 to 220 viscosity grade.

APPLICATION CONSIDERATIONS

For higher-speed applications (operating at 75 percent of the grease speed rating or more), a grease with a lighter base oil viscosity (ISO 100-150) can be considered. Conversely, for lower-speed applications, a grease with a heavier base oil viscosity (ISO 320-460) can be considered. For lower-speed applications operating at colder start-up temperatures (>-18° C [0° F]), consider a softer grease (NLGI grade 1) with an approved EP additive. The lighter grade will allow more grease flow into the bearing contact area and the EP additive will reduce wear during start-up. An ISO 460 base oil viscosity also can be considered.

When lower-speed applications operate at higher temperatures (>149° C [300° F]), consult a local Timken sales engineer.

GREASE FILL

For normal industrial applications, fill the bearing void to 100 percent full and the housing void to 40-60 percent full. For high-speed applications, fill the bearing void to 100 percent full and the housing void to 30-40 percent full. The free volume of the bearing can be estimated by first calculating the "solid ring" volume of the bearing. Then, weigh the bearing and divide the weight by the density of steel. This "actual" volume can then be subtracted from the "solid ring" volume. The resultant value is an estimate of the free volume of the bearing available for grease fill. When the grease volume is determined for the application, multiplying this value by the density of the grease will yield the approximate weight of the grease fill. After weighing the grease required, apply approximately 75 percent of the amount into the cage and roller assembly. The remaining amount of grease should then be applied to both inner and outer rings in equal amounts. The preservatives applied to bearing components are compatible with nearly all industrial greases and should not be wiped or cleaned prior to packing the bearing. If in doubt, contact a local Timken sales engineer.

THERMAL REFERENCE SPEED

Thermal Reference Speed is the bearing thermal equilibrium speed, under certain referenced conditions.

This criteria is based on industry standard reference conditions outlined in ISO 15312: 2003. Thermal equilibrium balances the heat generated by the bearing, with heat conduction through the housing and shaft. This standard applies to both bath oil lubricated and 30% grease fill packed bearings. It excludes any heat removed by a circulating lubricant. This standard also excludes the heat generated by seals.

ISO 15312 Thermal Reference Speed calculations are based on the following assumptions.

- The bearing ambient temperature is 20° C.
- The tolerable bearing/housing interface temperature is 70° C.
- Oil and grease lubricants are considered.
  - For radial bearings: ISO VG 32 oil.
  - For thrust bearings: ISO VG 68 oil.
  - For radial & thrust bearings: ISO VG 150 grease.
- The Radial and thrust loads assume a normal clearance (C_0).
  - For radial bearings, the applied load is 5% of the Static Load Rating (C_{0r}).
  - For thrust bearings, the applied load is 2% of the Static Load Rating (C_{0a}).

The Thermal Reference Speed values assume the bearing has been sufficiently broken in. During the break in process, temperatures may exceed the tolerable limit, experience a stabilized maximum temperature and then decrease. Break in commonly takes between 10 to 36 hours. Any questions about temperatures experienced during the break in process should be directed to your Timken sales engineer.

Certain bearing materials, lubricants, and methods of applying the lubricant, permit bearing temperatures in excess of 70° C. Contact your Timken sales engineer if application conditions dictate operating temperatures greater than 70° C are required, or if your application requires speeds above the Timken Catalogued values. Note: the Thermal Reference Speed does not consider cage behavior, as does the Limiting Speed.

LIMITING SPEED

Limiting Speed is the speed at which predicted cage life equals the bearing Catalogued fatigue life, under certain reference conditions.

The Limiting Speed is based on cage behavior. The Limiting Speed calculation studies cage stability and material wear through a theoretical speed dependent power law correlation.

Limiting Speed calculations are dependent on the following assumptions.

- The bearing is operating under typical sump or circulating oil conditions.
- After a critical amount of cage wear, the bearing is operating outside a tolerable factor of safety.
- The wear rate differs by bearing geometry and kinematics, cage geometry and dynamics, as well as the raceway and cage material interactions.

The Catalogued Limiting Speed values have been substantiated through testing. Contact your Timken sales engineer if your application requires faster speeds. Elevated speeds require further consideration, such as lubricant selection and method of application, cage design, and bearing sealing.

Note: the Limiting Speed does not consider thermal equilibrium, as does the Thermal Reference Speed.

SPHERICAL ROLLER BEARINGS

Timken® spherical roller bearings feature all of the characteristics that have made Timken renowned superior design, reliable performance and comprehensive technical support. Spherical roller bearings are designed to manage high radial loads and perform consistently, even when misalignment, marginal lubrication, contamination, extreme speeds and critical application stresses are present.

Nomenclature 64
Modification Codes 65
Spherical Roller Bearings 66

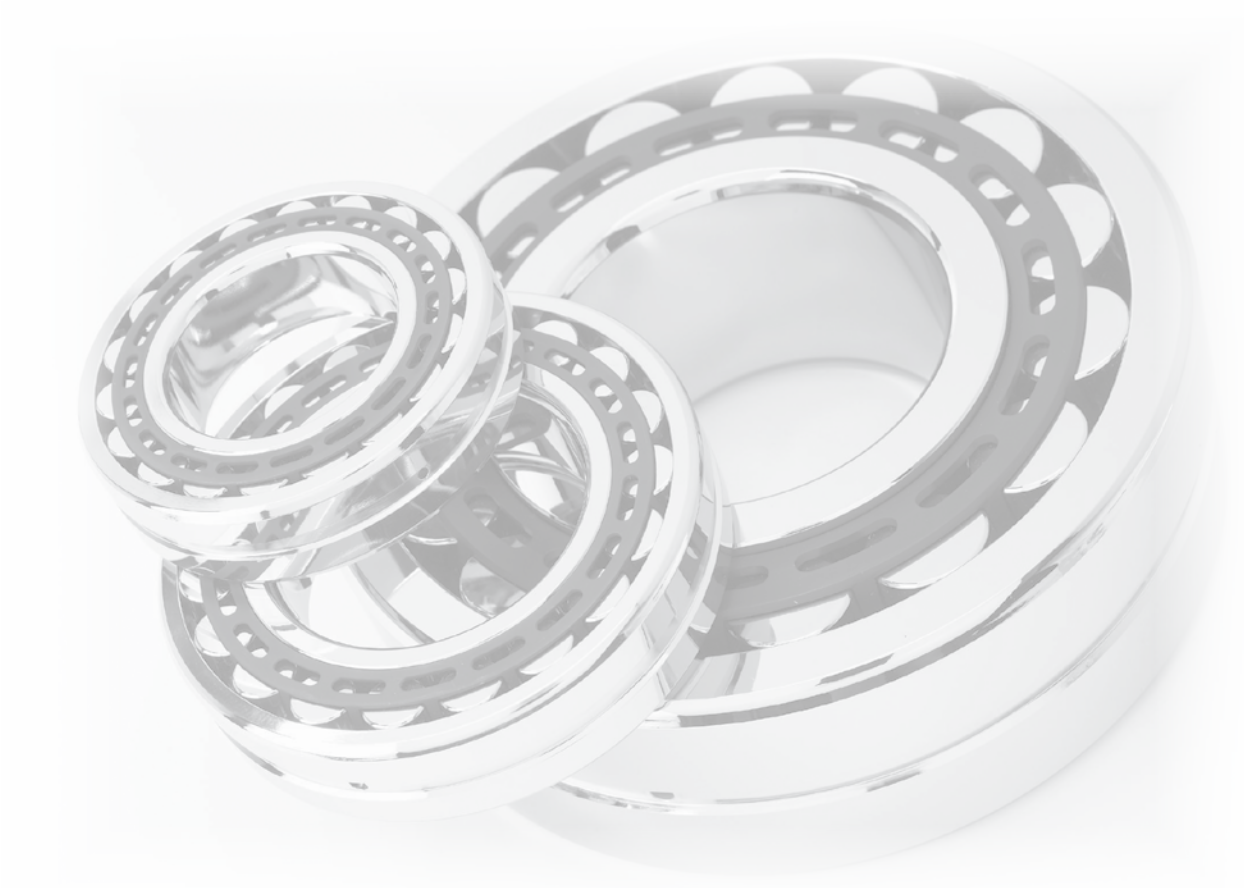

NOMENCLATURE

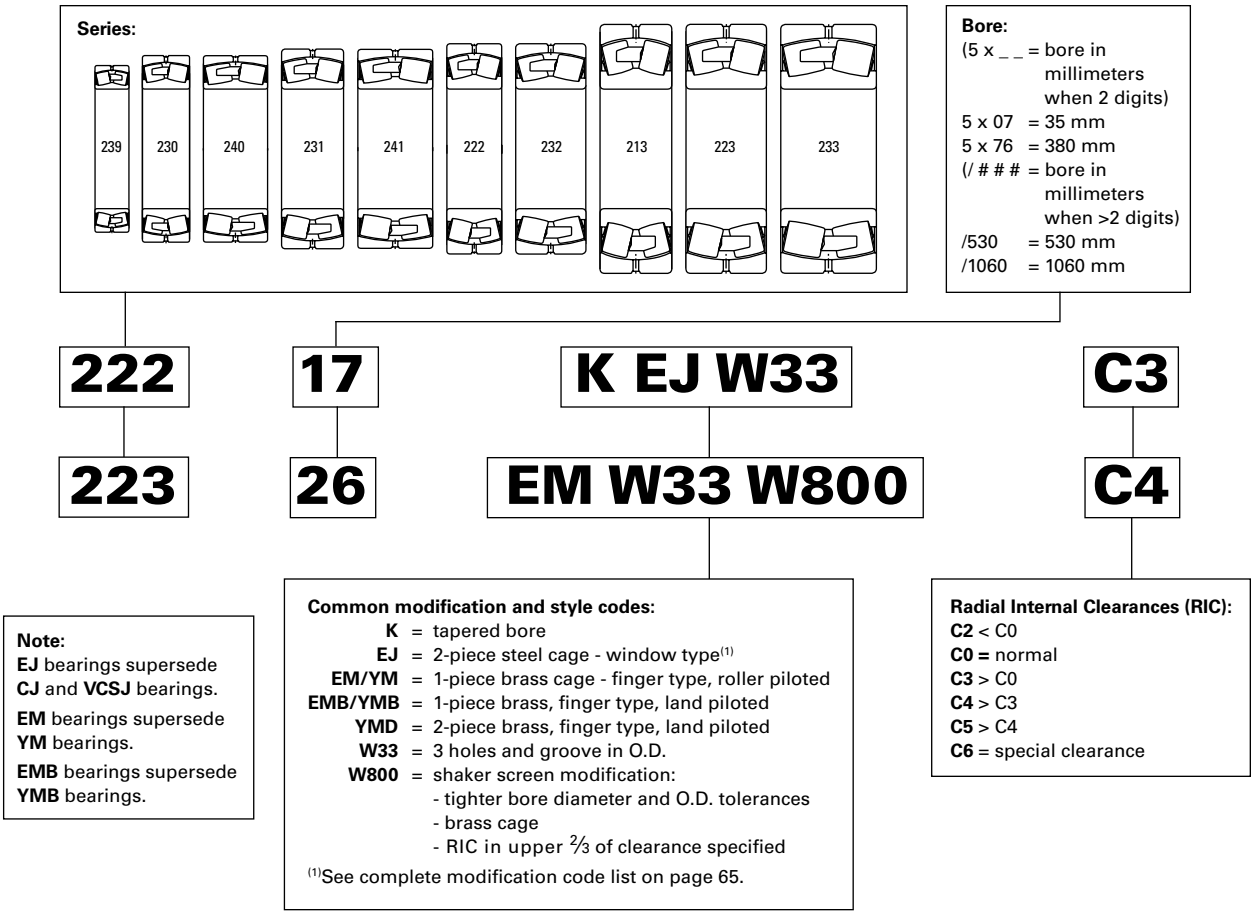

Fig. 23. Timken spherical roller bearing nomenclature.

TABLE 27. TIMKEN SPHERICAL ROLLER BEARING MODIFICATION CODES

TIMKEN[1]	SKF[2]	FAG[3]	NSK	Timken General Definition
EJ	E, EJA, C, CC, CCJA, EC, ECC	E1	EA, C, CD	Stamped nitrided steel cage – high performance
EM	CA, ECA, CAMA	M	CA	One-piece, roller-riding, machined-brass cage – high performance
EMB	CA, ECA, CAMA	MB	CA	One-piece, inner-ring-piloted, machined-brass cage – high performance
YMB	CA, ECA, CAMA	MB	CA	One-piece, inner-ring-piloted, machined-brass cage
YMD				Two-piece, inner-ring-piloted, machined-brass cage
C2	C2	C2	C2	Bearing radial internal clearance (RIC) smaller than normal
C3	C3	C3	C3	Bearing radial internal clearance (RIC) greater than normal
C4	C4	C4	C4	Bearing radial internal clearance (RIC) greater than C3
C5	C5	C5	C5	Bearing radial internal clearance (RIC) greater than C4
C6	C6	C6	CGxx, SLxx	Specific RIC designed to bearing size
S1(4)	S1	S1	S11	Bearing rings dimensionally stabilized for use at operating temperatures up to 200° C (392° F)
S2	S2	S2		Bearing rings dimensionally stabilized for use at operating temperatures up to 250° C (482° F)
S3	S3	S3		Bearing rings dimensionally stabilized for use at operating temperatures up to 300° C (572° F)
S4	S4	S4		Bearing rings dimensionally stabilized for use at operating temperatures up to 350° C (662° F)
C02	C02	T52BE	P5B, P53	Inner ring with P5 running accuracy, high point of eccentricity marked (SKF does not mark)
C04	C04	T52BN	P5C, P52	Outer ring with P5 running accuracy, high point of eccentricity marked (SKF does not mark)
C08	C08	T52BW	P55	P5 running accuracy (C02 + C04)
C08C3	C083	C3, T52BW	P55, C3	P5 running accuracy (C02 + C04), C3 RIC
C08C4	C084	C4, T52BW	P55, C4	P5 running accuracy (C02 + C04), C4 RIC
K	K	K	K	Tapered bore (1:12 on diameter 13, 22, 23, 30, 31, 32, 33, 38, 39 series)
K	K30	K30	K30	Tapered bore (1:30 on diameter 40, 41, 42 series)
W4	W4	J26A		Inner ring or sleeve marked to show high point of eccentricity
W6R				Engineered surface thin-film coating ES302 on roller contact surfaces
W20	W20	SY	E3	Outer ring with lubrication holes
W22	W22	T50H	S (a, b)	Special reduced O.D. tolerance on outer rings
W25	W73			Outer ring counter-drilled lubrication holes
W31	W31		U22	Bearing inspected to certain quality control requirements
W33	W33	S	E4	Standard lubrication holes and groove in outer ring
W40	ECD-	W209	g	Bearing made of carburizing-grade steel
W40I	HA3, ECB-	W209B	g3	Inner ring only made of carburizing-grade steel
W40R			g1	Roller only made of carburizing-grade steel
W40E			g2	Outer ring only made of carburizing-grade steel
W45A	VE 553			Tapped lifting holes in face of outer ring to facilitate lifting and handling
W47	VA414 (incl W800 & W47)	T41B (incl W22 & W47)		Inner ring with oversize bore
W84	W77	H44SA, H40	E42	Outer ring with standard lubrication holes plugged
W841	W	H40		Outer ring with no lubrication hole
W88				Special reduced bore tolerance on inner ring
W89				Inner ring with lubrication holes and lubrication groove
W94	W26	H40AB	E5	Inner ring lubrication holes
W507	W507	J26A	E4U22, E4P53	W31 + W33 + W45A
W509	W509 (W26 + W31 + W33)	S.H40A	E7U22	W31 + W33 + W94 + W45A (where feasible)
W525	W525 (W31 + W77)	S.H44S		W31 + W33 + W84 + W45A (where feasible)
W534				W507 + C08
W800	VA405	T41A	U15, VS	Shaker screen modification (W22 + W88 + radial internal clearance in upper 2/3 of range specified)
W906A	C083HA3	T52BW.W209B		C08 + W31 +W33 + W40I + W40R – Modification mainly used in paper industry

[1]Timken offers differentiated solutions for many applications. This is only a partial list of common modification codes.
[2]E suffix for SKF Explorer available in some sizes.
[3]E1 suffix for FAG X-life available in some sizes.
[4]Standard for all Timken spherical roller bearings.
Every reasonable effort has been made to ensure the accuracy of the information contained in this writing, but no liability is accepted for errors, omissions or for any other reason.

SPHERICAL ROLLER BEARINGS

- Shaft and housing fits, internal clearances, tolerances and other technical data for these bearings are found in the engineering section of this catalog and the Timken Engineering Manual (order no. 10424).
- Bearings are available with a tapered bore for adapter-type mounting. To order, add the suffix "K" to bearing number (e.g., 23120K).
- Consult your Timken sales engineer for up-to-date information about the availability of the bearings you have selected.

Bearing Part Number	Bearing Dimensions			Load Ratings		Cage Type	Mounting Data			Equivalent Radial Load Factors[2]				Geometry Factor[3] C_g	Speed Reference			Weight
	Bore d	O.D. D	Width B	Dynamic C	Static C_o		Fillet[1] (Max.) R	Backing Diameter Shaft d_a	Backing Diameter Housing D_a	Dynamic e	Dynamic $\frac{F_a}{F_r} \le e$ X = 1 Y	Dynamic $\frac{F_a}{F_r} > e$ X = 0.67 Y	Static In All Cases Y_0		Thermal Reference Speed[4] Oil	Thermal Reference Speed[4] Grease	Limiting Speed[5]	
	mm in.	mm in.	mm in.	kN lbf.	kN lbf.		mm in.	mm in.	mm in.						RPM	RPM	RPM	kg lbs.
22205	**25**	**52**	**18**	**50.6**	**43.1**	EJ	**1**	**30**	**47**	0.34	2.00	2.98	1.96	0.033	11500	9200	17220	**0.2**
	0.9843	2.0472	0.7087	11400	9690		0.04	1.2	1.9									0.4
21305	**25**	**62**	**17**	**55.5**	**44.3**	EJ	**1**	**35**	**55**	0.27	2.48	3.70	2.43	0.037	10100	8100	13720	**0.3**
	0.9843	2.4409	0.6693	12500	9970		0.04	1.4	2.1									0.6
22206	**30**	**62**	**20**	**67.4**	**60.8**	EJ	**1**	**38**	**56**	0.31	2.15	3.20	2.10	0.037	9700	7800	13360	**0.3**
	1.1811	2.4409	0.7874	15200	13700		0.04	1.5	2.2									0.6
22206	**30**	**62**	**20**	**64.3**	**56.8**	EM	**1**	**38**	**56**	0.31	2.15	3.20	2.10	0.036	9900	7900	14030	**0.3**
	1.1811	2.4409	0.7874	14400	12800		0.04	1.5	2.2									0.6
21306	**30**	**72**	**19**	**70.3**	**56.5**	EJ	**1**	**41**	**64**	0.26	2.60	3.87	2.54	0.041	8900	7200	11590	**0.4**
	1.1811	2.8346	0.7480	15800	12700		0.04	1.6	2.5									0.9
22207	**35**	**72**	**23**	**90.5**	**88**	EJ	**1**	**45**	**65**	0.31	2.21	3.29	2.16	0.041	8600	6900	11900	**0.4**
	1.3780	2.8346	0.9055	20300	19700		0.04	1.8	2.6									1.0
22207	**35**	**72**	**23**	**86.5**	**82**	EM	**1**	**45**	**65**	0.31	2.21	3.29	2.16	0.041	8700	7000	13290	**0.4**
	1.3780	2.8346	0.9055	19400	18500		0.04	1.8	2.6									1.0
21307	**35**	**80**	**21**	**90.2**	**77.8**	EJ	**1.5**	**47**	**71**	0.26	2.56	3.81	2.50	0.044	7900	6400	10580	**0.5**
	1.3780	3.1496	0.8268	20300	17500		0.06	1.9	2.8									1.1
22208	**40**	**80**	**23**	**104**	**99.7**	EJ	**1**	**50**	**73**	0.27	2.47	3.67	2.41	0.044	7500	6000	10980	**0.5**
	1.5748	3.1496	0.9055	23400	22400		0.04	2.0	2.9									1.2
22208	**40**	**80**	**23**	**99.6**	**93.4**	EM	**1**	**50**	**73**	0.27	2.47	3.67	2.41	0.044	7600	6100	9990	**0.5**
	1.5748	3.1496	0.9055	22400	21000		0.04	2.0	2.9									1.2
21308	**40**	**90**	**23**	**113**	**102**	EJ	**1.5**	**54**	**80**	0.26	2.64	3.93	2.58	0.048	7100	5800	9240	**0.7**
	1.5748	3.5433	0.9055	25400	22900		0.06	2.1	3.2									1.5
22308	**40**	**90**	**33**	**155**	**147**	EJ	**1.5**	**53**	**81**	0.36	1.87	2.79	1.83	0.046	6700	5600	7560	**1.0**
	1.5748	3.5433	1.2992	34900	33100		0.06	2.1	3.2									2.2
22308	**40**	**90**	**33**	**147**	**137**	EM	**1.5**	**53**	**81**	0.36	1.87	2.79	1.83	0.045	6700	5600	8040	**1.1**
	1.5748	3.5433	1.2992	33100	30800		0.06	2.1	3.2									2.3
22209	**45**	**85**	**23**	**109**	**108**	EJ	**1**	**55**	**77**	0.26	2.64	3.93	2.58	0.046	6800	5500	10400	**0.6**
	1.7717	3.3465	0.9055	24500	24200		0.04	2.2	3.0									1.3
22209	**45**	**85**	**23**	**104**	**101**	EM	**1**	**55**	**77**	0.26	2.64	3.93	2.58	0.046	6900	5600	9400	**0.6**
	1.7717	3.3465	0.9055	23500	22800		0.04	2.2	3.0									1.3
21309	**45**	**100**	**25**	**138**	**125**	EJ	**1.5**	**60**	**90**	0.25	2.75	4.09	2.69	0.052	6500	5300	8510	**1.0**
	1.7717	3.9370	0.9843	31000	28200		0.06	2.4	3.5									2.2
22309	**45**	**100**	**36**	**190**	**182**	EJ	**1.5**	**58**	**90**	0.36	1.90	2.83	1.86	0.049	6100	5100	7090	**1.3**
	1.7717	3.9370	1.4173	42700	40800		0.06	2.3	3.5									3.0
22309	**45**	**100**	**36**	**180**	**169**	EM	**1.5**	**58**	**90**	0.36	1.90	2.83	1.86	0.048	6100	5100	7020	**1.4**
	1.7717	3.9370	1.4173	40500	37900		0.06	2.3	3.5									3.1

[1]Maximum shaft or housing fillet radius that bearing corners will clear.
[2]These factors apply for both inch and metric calculations. See engineering section for instructions on use.
[3]Geometry constant for Lubrication Life Factor a31 is found in the Bearing Ratings section of the Engineering Manual (order no. 10424).
[4]See thermal reference speed in the Engineering Manual (order no. 10424) and on page 61.
[5]See limiting speed on page 61.

Continued on next page.

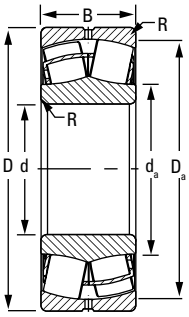

EJ

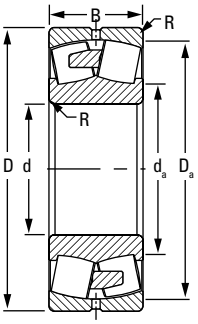

EM/YM

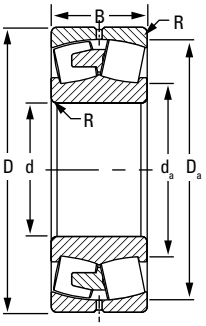

EMB/YMB

Continued from previous page.

Bearing Part Number	Bearing Dimensions			Load Ratings		Cage Type	Mounting Data			Equivalent Radial Load Factors[2]				Geometry Factor[3] C_g	Speed Reference			Weight
	Bore d	O.D. D	Width B	Dynamic C	Static C_o		Fillet[1] (Max.) R	Backing Diameter Shaft d_a	Backing Diameter Housing D_a	e	Dynamic $\frac{F_a}{F_r} \le e$ X = 1 Y	Dynamic $\frac{F_a}{F_r} > e$ X = 0.67 Y	Static In All Cases Y_0		Thermal Reference Speed[4] Oil	Thermal Reference Speed[4] Grease	Limiting Speed[5]	
	mm in.	mm in.	mm in.	kN lbf.	kN lbf.		mm in.	mm in.	mm in.						RPM	RPM	RPM	kg lbs.
22210	**50**	**90**	**23**	**117**	**118**	EJ	**1**	**59**	**82**	0.24	2.84	4.23	2.78	0.049	6200	5000	9450	**0.6**
	1.9685	3.5433	0.9055	26300	26600		0.04	2.3	3.2									1.3
22210	**50**	**90**	**23**	**112**	**112**	EM	**1**	**59**	**82**	0.24	2.84	4.23	2.78	0.048	6300	5100	9110	**0.6**
	1.9685	3.5433	0.9055	25200	25100		0.04	2.3	3.2									1.3
21310	**50**	**110**	**27**	**163**	**151**	EJ	**2**	**67**	**99**	0.24	2.83	4.21	2.76	0.055	5900	4900	7710	**1.2**
	1.9685	4.3307	1.0630	36700	33800		0.08	2.6	3.9									2.6
22310	**50**	**110**	**40**	**238**	**241**	EJ	**2**	**65**	**98**	0.36	1.89	2.81	1.85	0.055	5500	4600	6430	**1.9**
	1.9685	4.3307	1.5748	53500	54200		0.08	2.6	3.9									4.2
22310	**50**	**110**	**40**	**227**	**225**	EM	**2**	**65**	**98**	0.36	1.89	2.81	1.85	0.052	5600	4700	6630	**1.9**
	1.9685	4.3307	1.5748	51000	50600		0.08	2.6	3.9									4.2
22211	**55**	**100**	**25**	**140**	**142**	EJ	**1.5**	**66**	**91**	0.23	2.95	4.40	2.89	0.052	5800	4700	8980	**0.8**
	2.1654	3.9370	0.9843	31400	31900		0.06	2.6	3.6									1.8
22211	**55**	**100**	**25**	**134**	**134**	EM	**1.5**	**66**	**91**	0.23	2.95	4.40	2.89	0.052	5900	4700	8910	**0.9**
	2.1654	3.9370	0.9843	30100	30100		0.06	2.6	3.6									1.9
21311	**55**	**120**	**29**	**188**	**176**	EJ	**2**	**73**	**108**	0.24	2.81	4.18	2.75	0.051	5500	4500	6930	**1.6**
	2.1654	4.7244	1.1417	42400	39500		0.08	2.9	4.2									3.5
22311	**55**	**120**	**43**	**266**	**265**	EJ	**2**	**69**	**106**	0.36	1.89	2.81	1.84	0.050	5100	4300	5890	**2.4**
	2.1654	4.7244	1.6929	59800	59500		0.08	2.7	4.2									5.3
22311	**55**	**120**	**43**	**266**	**265**	EM	**2**	**69**	**106**	0.36	1.89	2.81	1.84	0.050	5200	4400	6110	**2.4**
	2.1654	4.7244	1.6929	59800	59500		0.08	2.7	4.2									5.3
22212	**60**	**110**	**28**	**169**	**174**	EJ	**1.5**	**72**	**100**	0.24	2.84	4.23	2.78	0.055	5500	4400	7960	**1.1**
	2.3622	4.3307	1.1024	38100	39000		0.06	2.8	4.0									2.5
22212	**60**	**110**	**28**	**163**	**164**	EM	**1.5**	**72**	**100**	0.24	2.84	4.23	2.78	0.055	5600	4500	9000	**1.2**
	2.3622	4.3307	1.1024	36600	36900		0.06	2.8	4.0									2.6
21312	**60**	**130**	**31**	**225**	**219**	EJ	**2**	**80**	**116**	0.23	2.91	4.33	2.84	0.054	5100	4200	6660	**2.0**
	2.3622	5.1181	1.2205	50500	49200		0.08	3.2	4.6									4.4
22312	**60**	**130**	**46**	**306**	**307**	EJ	**2**	**77**	**117**	0.34	1.98	2.94	1.93	0.053	4700	4000	5360	**3.0**
	2.3622	5.1181	1.8110	68800	69000		0.08	3.0	4.6									6.6
22312	**60**	**130**	**46**	**306**	**307**	EM	**2**	**77**	**117**	0.34	1.98	2.94	1.93	0.053	4900	4100	5540	**3.0**
	2.3622	5.1181	1.8110	68800	69000		0.08	3.0	4.6									6.6
22213	**65**	**120**	**31**	**206**	**216**	EJ	**1.5**	**78**	**109**	0.24	2.79	4.15	2.73	0.051	5100	4200	7320	**1.5**
	2.5591	4.7244	1.2205	46400	48600		0.06	3.1	4.3									3.3

[1]Maximum shaft or housing fillet radius that bearing corners will clear.

[2]These factors apply for both inch and metric calculations. See engineering section for instructions on use.

[3]Geometry constant for Lubrication Life Factor a31 is found in the Bearing Ratings section of the Engineering Manual (order no. 10424).

[4]See thermal reference speed in the Engineering Manual (order no. 10424) and on page 61.

[5]See limiting speed on page 61.

Continued on next page.

SPHERICAL ROLLER BEARINGS – *continued*

- Shaft and housing fits, internal clearances, tolerances and other technical data for these bearings are found in the engineering section of this catalog and the Timken Engineering Manual (order no. 10424).
- Bearings are available with a tapered bore for adapter-type mounting. To order, add the suffix "K" to bearing number (e.g., 23120K).
- Consult your Timken sales engineer for up-to-date information about the availability of the bearings you have selected.

Continued from previous page.

Bearing Part Number	Bearing Dimensions			Load Ratings		Cage Type	Mounting Data			Equivalent Radial Load Factors[2]				Geometry Factor[3] C_g	Speed Reference			Weight
	Bore d	O.D. D	Width B	Dynamic C	Static C_o		Fillet[1] (Max.) R	Backing Diameter Shaft d_a	Backing Diameter Housing D_a	Dynamic e	Dynamic $\frac{F_a}{F_r} \le e$ X = 1 Y	Dynamic $\frac{F_a}{F_r} > e$ X = 0.67 Y	Static In All Cases Y_0		Thermal Reference Speed[4] Oil	Thermal Reference Speed[4] Grease	Limiting Speed[5]	
	mm in.	mm in.	mm in.	kN lbf.	kN lbf.		mm in.	mm in.	mm in.						RPM	RPM	RPM	kg lbs.
22213	**65** 2.5591	**120** 4.7244	**31** 1.2205	**198** 44600	**204** 45900	EM	**1.5** 0.06	**78** 3.1	**109** 4.3	0.24	2.79	4.15	2.73	0.051	5200	4200	7520	**1.6** 3.4
21313	**65** 2.5591	**140** 5.5118	**33** 1.2992	**259** 58200	**254** 57100	EJ	**2** 0.08	**86** 3.4	**126** 5.0	0.23	2.94	4.37	2.87	0.057	4800	3900	6110	**2.4** 5.3
22313	**65** 2.5591	**140** 5.5118	**48** 1.8898	**344** 77400	**346** 77800	EJ	**2** 0.08	**84** 3.3	**127** 5.0	0.33	2.05	3.05	2.00	0.056	4400	3800	4960	**3.6** 7.9
22313	**65** 2.5591	**140** 5.5118	**48** 1.8898	**344** 77400	**346** 77800	EM	**2** 0.08	**84** 3.3	**127** 5.0	0.33	2.05	3.05	2.00	0.056	4600	3900	5110	**3.6** 7.9
22214	**70** 2.7559	**125** 4.9213	**31** 1.2205	**213** 47800	**231** 52000	EJ	**1.5** 0.06	**84** 3.3	**114** 4.5	0.23	2.90	4.32	2.84	0.055	4800	3900	7040	**1.6** 3.5
22214	**70** 2.7559	**125** 4.9213	**31** 1.2205	**205** 46000	**219** 49200	EM	**1.5** 0.06	**84** 3.3	**114** 4.5	0.23	2.90	4.32	2.84	0.055	4900	4000	7110	**1.6** 3.5
21314	**70** 2.7559	**150** 5.9055	**35** 1.3780	**292** 65600	**289** 65000	EJ	**2** 0.08	**93** 3.7	**135** 5.3	0.23	2.97	4.42	2.90	0.059	4500	3700	5660	**3.0** 6.6
22314	**70** 2.7559	**150** 5.9055	**51** 2.0079	**395** 88800	**414** 93100	EJ	**2** 0.08	**91** 3.6	**135** 5.3	0.33	2.07	3.08	2.02	0.059	4200	3600	4690	**4.4** 9.7
22314	**70** 2.7559	**150** 5.9055	**51** 2.0079	**395** 88800	**414** 93100	EM	**2** 0.08	**91** 3.6	**135** 5.3	0.33	2.07	3.08	2.02	0.059	4200	3600	5020	**4.4** 9.7
22215	**75** 2.9528	**130** 5.1181	**31** 1.2205	**222** 49900	**240** 54100	EJ	**1.5** 0.06	**88** 3.5	**120** 4.7	0.22	3.14	4.67	3.07	0.055	4600	3700	6640	**1.7** 3.7
21315	**75** 2.9528	**160** 6.2992	**37** 1.4567	**322** 72400	**321** 72200	EJ	**2** 0.08	**99** 3.9	**144** 5.7	0.23	2.98	4.43	2.91	0.062	4300	3600	5280	**3.5** 7.7
22315	**75** 2.9528	**160** 6.2992	**55** 2.1654	**450** 101000	**478** 107000	EJ	**2** 0.08	**97** 3.8	**144** 5.7	0.33	2.04	3.04	2.00	0.061	4000	3400	4330	**5.2** 11.9
22315	**75** 2.9528	**160** 6.2992	**55** 2.1654	**450** 101000	**478** 107000	EM	**2** 0.08	**97** 3.8	**144** 5.7	0.33	2.04	3.04	2.00	0.061	4000	3400	4750	**5.4** 11.9
22216	**80** 3.1496	**140** 5.5118	**33** 1.2992	**254** 57200	**278** 62500	EJ	**2** 0.08	**95** 3.7	**129** 5.1	0.22	3.14	4.67	3.07	0.057	4300	3500	6190	**2.0** 4.5
22216	**80** 3.1496	**140** 5.5118	**33** 1.2992	**245** 55100	**263** 59200	EM	**2** 0.08	**95** 3.7	**129** 5.1	0.22	3.14	4.67	3.07	0.057	4400	3600	6650	**2.1** 4.7
21316	**80** 3.1496	**170** 6.6929	**39** 1.5354	**363** 81700	**363** 81700	EJ	**2** 0.08	**105** 4.1	**153** 6.0	0.22	3.01	4.47	2.94	0.065	4100	3400	5050	**4.2** 9.2
22316	**80** 3.1496	**170** 6.6929	**58** 2.2835	**499** 112000	**534** 120000	EJ	**2** 0.08	**103** 4.1	**153** 6.0	0.33	2.06	3.06	2.01	0.064	3700	3200	4160	**6.4** 14.1
22316	**80** 3.1496	**170** 6.6929	**58** 2.2835	**499** 112000	**534** 120000	EM	**2** 0.08	**103** 4.1	**153** 6.0	0.33	2.06	3.06	2.01	0.064	3800	3300	4590	**6.4** 14.1

[1]Maximum shaft or housing fillet radius that bearing corners will clear.
[2]These factors apply for both inch and metric calculations. See engineering section for instructions on use.
[3]Geometry constant for Lubrication Life Factor a31 is found in the Bearing Ratings section of the Engineering Manual (order no. 10424).
[4]See thermal reference speed in the Engineering Manual (order no. 10424) and on page 61.
[5]See limiting speed on page 61.

Continued on next page.

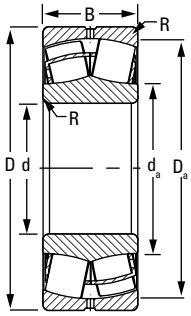

EJ

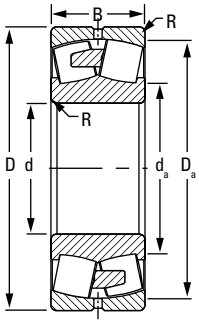

EM/YM

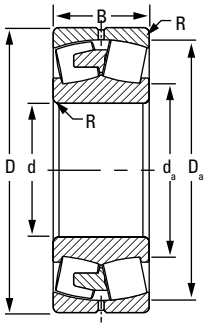

EMB/YMB

Continued from previous page.

Bearing Part Number	Bearing Dimensions			Load Ratings		Cage Type	Mounting Data			Equivalent Radial Load Factors[2]				Geometry Factor[3] C_g	Speed Reference			Weight
	Bore d	O.D. D	Width B	Dynamic C	Static C_o		Fillet[1] (Max.) R	Backing Diameter Shaft d_a	Backing Diameter Housing D_a	Dynamic e	Dynamic $\frac{F_a}{F_r} \le e$ X = 1 Y	Dynamic $\frac{F_a}{F_r} > e$ X = 0.67 Y	Static In All Cases Y_0		Thermal Reference Speed[4] Oil	Thermal Reference Speed[4] Grease	Limiting Speed[5]	
	mm in.	mm in.	mm in.	kN lbf.	kN lbf.		mm in.	mm in.	mm in.						RPM	RPM	RPM	kg lbs.
22217	**85** 3.3465	**150** 5.9055	**36** 1.4173	**297** 66900	**320** 71900	EJ	**2** 0.08	**101** 4.0	**139** 5.5	0.22	3.07	4.57	3.00	0.060	4200	3400	5840	**2.6** 5.6
22217	**85** 3.3465	**150** 5.9055	**36** 1.4173	**286** 64200	**302** 67900	EM	**2** 0.08	**101** 4.0	**139** 5.5	0.22	3.07	4.57	3.00	0.059	4200	3500	5960	**2.7** 6.0
21317	**85** 3.3465	**180** 7.0866	**41** 1.6142	**403** 90600	**407** 91500	EJ	**2.5** 0.1	**112** 4.4	**162** 6.4	0.22	3.04	4.53	2.97	0.067	3900	3200	4730	**4.9** 10.8
22317	**85** 3.3465	**180** 7.0866	**60** 2.3622	**543** 122000	**584** 131000	EJ	**2.5** 0.1	**110** 4.3	**162** 6.4	0.32	2.11	3.14	2.06	0.066	3500	3000	3860	**7.5** 16.5
22317	**85** 3.3465	**180** 7.0866	**60** 2.3622	**543** 122000	**584** 131000	EM	**2.5** 0.1	**110** 4.3	**162** 6.4	0.32	2.11	3.14	2.06	0.066	3500	3000	4320	**7.5** 16.5
22218	**90** 3.5433	**160** 6.2992	**40** 1.5748	**355** 79700	**388** 87200	EJ	**2** 0.08	**105** 4.2	**146** 5.8	0.23	2.90	4.31	2.83	0.064	4300	3500	5520	**3.5** 7.7
22218	**90** 3.5433	**160** 6.2992	**40** 1.5748	**355** 79700	**388** 87200	EM	**2** 0.08	**105** 4.2	**146** 5.8	0.23	2.90	4.31	2.83	0.064	4300	3500	5790	**3.5** 7.7
23218	**90** 3.5433	**160** 6.2992	**52.4** 2.0630	**436** 98000	**521** 117000	EJ	**2** 0.08	**107** 4.2	**147** 5.8	0.30	2.28	3.40	2.23	0.065	3000	2600	4160	**4.5** 9.9
23218	**90** 3.5433	**160** 6.2992	**52.4** 2.0630	**436** 98000	**521** 117000	EM	**2** 0.08	**107** 4.2	**147** 5.8	0.30	2.28	3.40	2.23	0.065	3000	2600	3850	**4.5** 9.9
21318	**90** 3.5433	**190** 7.4803	**43** 1.6929	**442** 99400	**449** 101000	EJ	**2.5** 0.1	**118** 4.7	**171** 6.7	0.22	3.05	4.55	2.99	0.069	3700	3100	4460	**5.8** 12.8
22318	**90** 3.5433	**190** 7.4803	**64** 2.5197	**606** 136000	**659** 148000	EJ	**2.5** 0.1	**116** 4.6	**171** 6.7	0.32	2.09	3.11	2.04	0.069	3400	2900	3640	**8.3** 19.4
22318	**90** 3.5433	**190** 7.4803	**64** 2.5197	**606** 136000	**659** 148000	EM	**2.5** 0.1	**116** 4.6	**171** 6.7	0.32	2.09	3.11	2.04	0.069	3400	2900	4190	**8.8** 19.4
23318	**90** 3.5433	**190** 7.4803	**73** 2.8740	**623** 140000	**672** 151000	EM	**2.5** 0.1	**110** 4.3	**167** 6.6	0.40	1.70	2.52	1.66	0.067	2500	2100	2970	**9.8** 21.6
21319	**95** 3.7402	**200** 7.8740	**45** 1.7717	**474** 107000	**483** 109000	EJ	**2.5** 0.1	**125** 4.9	**180** 7.1	0.22	3.02	4.50	2.96	0.072	3600	3000	4460	**6.5** 14.4
22219	**95** 3.7402	**170** 6.6929	**43** 1.6929	**385** 86600	**441** 99000	EJ	**2** 0.08	**114** 4.5	**155** 6.1	0.23	2.88	4.29	2.82	0.067	3900	3200	5120	**4.2** 9.2
22219	**95** 3.7402	**170** 6.6929	**43** 1.6929	**385** 86600	**441** 99000	EM	**2** 0.08	**114** 4.5	**155** 6.1	0.23	2.88	4.29	2.82	0.067	3900	3200	5550	**4.2** 9.2

[1]Maximum shaft or housing fillet radius that bearing corners will clear.

[2]These factors apply for both inch and metric calculations. See engineering section for instructions on use.

[3]Geometry constant for Lubrication Life Factor a31 is found in the Bearing Ratings section of the Engineering Manual (order no. 10424).

[4]See thermal reference speed in the Engineering Manual (order no. 10424) and on page 61.

[5]See limiting speed on page 61.

Continued on next page.

SPHERICAL ROLLER BEARINGS – *continued*

- Shaft and housing fits, internal clearances, tolerances and other technical data for these bearings are found in the engineering section of this catalog and the Timken Engineering Manual (order no. 10424).
- Bearings are available with a tapered bore for adapter-type mounting. To order, add the suffix "K" to bearing number (e.g., 23120K).
- Consult your Timken sales engineer for up-to-date information about the availability of the bearings you have selected.

Continued from previous page.

Bearing Part Number	Bearing Dimensions			Load Ratings		Cage Type	Mounting Data			Equivalent Radial Load Factors[2]				Geometry Factor[3] C_g	Speed Reference			Weight
	Bore d	O.D. D	Width B	Dynamic C	Static C_o		Fillet[1] (Max.) R	Backing Diameter Shaft d_a	Backing Diameter Housing D_a	Dynamic e	Dynamic $\frac{F_a}{F_r} \le e$ X = 1 Y	Dynamic $\frac{F_a}{F_r} > e$ X = 0.67 Y	Static In All Cases Y_0		Thermal Reference Speed[4] Oil	Thermal Reference Speed[4] Grease	Limiting Speed[5]	
	mm in.	mm in.	mm in.	kN lbf.	kN lbf.		mm in.	mm in.	mm in.						RPM	RPM	RPM	kg lbs.
22319	**95** 3.7402	**200** 7.8740	**67** 2.6378	**694** 156000	**774** 174000	EJ	**2.5** 0.1	**122** 4.8	**180** 7.1	0.32	2.10	3.13	2.05	0.072	3000	2600	3470	**10.2** 22.4
22319	**95** 3.7402	**200** 7.8740	**67** 2.6378	**663** 149000	**725** 163000	EM	**2.5** 0.1	**122** 4.8	**180** 7.1	0.32	2.10	3.13	2.05	0.071	3100	2600	4020	**10.2** 22.4
24020	**100** 3.9370	**150** 5.9055	**50** 1.9685	**352** 79100	**506** 114000	EJ	**1.5** 0.06	**111** 4.4	**139** 5.5	0.29	2.32	3.45	2.26	0.065	3200	2700	4060	**3.0** 6.6
21320	**100** 3.9370	**215** 8.4646	**47** 1.8504	**521** 119000	**530** 121000	EJ	**2.5** 0.1	**133** 5.2	**193** 7.6	0.22	3.13	4.66	3.06	0.075	3400	2800	4190	**8.1** 17.7
23120	**100** 3.9370	**165** 6.4961	**52** 2.0472	**446** 100000	**583** 131000	EJ	**2** 0.08	**114** 4.5	**150** 6.0	0.28	2.35	3.50	2.30	0.067	3200	2700	4070	**4.4** 9.7
23120	**100** 3.9370	**165** 6.4961	**52** 2.0472	**446** 100000	**583** 131000	EM	**2** 0.08	**114** 4.5	**150** 6.0	0.28	2.35	3.50	2.30	0.067	3200	2700	4060	**4.4** 9.7
22220	**100** 3.9370	**180** 7.0866	**46** 1.8110	**435** 97700	**502** 113000	EJ	**2** 0.08	**120** 4.7	**163** 6.4	0.24	2.85	4.24	2.78	0.069	3800	3100	4990	**5.0** 11.0
22220	**100** 3.9370	**180** 7.0866	**46** 1.8110	**435** 97700	**502** 113000	EM	**2** 0.08	**120** 4.7	**163** 6.4	0.24	2.85	4.24	2.78	0.069	3800	3100	5230	**5.0** 11.0
23220	**100** 3.9370	**180** 7.0866	**60.3** 2.3740	**554** 124000	**678** 152000	EJ	**2** 0.08	**119** 4.7	**164** 6.5	0.30	2.22	3.30	2.17	0.070	2700	2300	3780	**6.6** 14.5
23220	**100** 3.9370	**180** 7.0866	**60.3** 2.374	**554** 124000	**678** 152000	EM	**2** 0.08	**119** 4.7	**164** 6.5	0.30	2.22	3.30	2.17	0.070	2700	2300	3440	**6.6** 14.5
22320	**100** 3.9370	**215** 8.4646	**73** 2.8740	**804** 181000	**910** 205000	EJ	**2.5** 0.1	**131** 5.1	**193** 7.6	0.33	2.06	3.07	2.02	0.075	2800	2400	3250	**12.7** 28.2
22320	**100** 3.9370	**215** 8.4646	**73** 2.8740	**768** 173000	**853** 192000	EM	**2.5** 0.1	**130** 5.1	**193** 7.6	0.33	2.06	3.07	2.02	0.074	2900	2500	3810	**12.8** 28.2
23022	**110** 4.3307	**170** 6.6929	**45** 1.7717	**391** 88000	**534** 120000	EJ	**2** 0.08	**125** 4.9	**158** 6.2	0.23	2.90	4.32	2.84	0.071	3600	2900	4300	**3.6** 7.9
24022	**110** 4.3307	**170** 6.6929	**60** 2.3622	**493** 111000	**706** 159000	EJ	**2** 0.08	**122** 4.8	**157** 6.2	0.31	2.15	3.21	2.11	0.070	2900	2500	3660	**4.9** 10.8
23122	**110** 4.3307	**180** 7.0866	**56** 2.2047	**518** 116000	**686** 154000	EJ	**2** 0.08	**126** 5.0	**166** 6.5	0.28	2.40	3.58	2.35	0.072	2900	2500	3730	**5.6** 12.3
23122	**110** 4.3307	**180** 7.0866	**56** 2.2047	**518** 116000	**686** 154000	EM	**2** 0.08	**126** 5.0	**166** 6.5	0.28	2.40	3.58	2.35	0.072	2900	2500	3720	**5.6** 12.3
24122	**110** 4.3307	**180** 7.0866	**69** 2.7165	**595** 134000	**811** 182000	EJ	**2** 0.08	**124** 4.9	**164** 6.5	0.34	1.96	2.92	1.92	0.071	2100	1800	3000	**6.7** 14.7
22222	**110** 4.3307	**200** 7.8740	**53** 2.0866	**555** 125000	**653** 147000	EJ	**2** 0.08	**133** 5.2	**182** 7.2	0.25	2.73	4.06	2.67	0.074	3500	2900	4410	**7.2** 15.8

[1]Maximum shaft or housing fillet radius that bearing corners will clear.
[2]These factors apply for both inch and metric calculations. See engineering section for instructions on use.
[3]Geometry constant for Lubrication Life Factor a31 is found in the Bearing Ratings section of the Engineering Manual (order no. 10424).
[4]See thermal reference speed in the Engineering Manual (order no. 10424) and on page 61.
[5]See limiting speed on page 61.

Continued on next page.

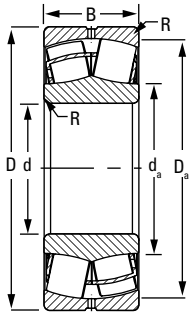

EJ

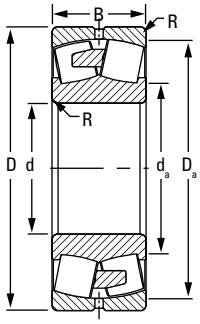

EM/YM

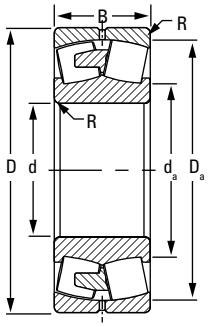

EMB/YMB

Continued from previous page.

Bearing Part Number	Bearing Dimensions			Load Ratings		Cage Type	Mounting Data			Equivalent Radial Load Factors[2]				Geometry Factor[3] C_g	Speed Reference			Weight
	Bore d	O.D. D	Width B	Dynamic C	Static C_o		Fillet[1] (Max.) R	Backing Diameter Shaft d_a	Backing Diameter Housing D_a	e	Dynamic $\frac{F_a}{F_r} \le e$ X = 1 Y	Dynamic $\frac{F_a}{F_r} > e$ X = 0.67 Y	Static In All Cases Y_0		Thermal Reference Speed[4] Oil	Thermal Reference Speed[4] Grease	Limiting Speed[5]	
	mm in.	mm in.	mm in.	kN lbf.	kN lbf.		mm in.	mm in.	mm in.						RPM	RPM	RPM	kg lbs.
22222	**110** 4.3307	**200** 7.8740	**53** 2.0866	**555** 125000	**653** 147000	EM	**2** 0.08	**133** 5.2	**182** 7.2	0.25	2.73	4.06	2.67	0.074	3500	2900	4800	**7.2** 15.8
23222	**110** 4.3307	**200** 7.8740	**69.8** 2.7480	**710** 160000	**887** 199000	EJ	**2** 0.08	**131** 5.2	**182** 7.2	0.32	2.11	3.14	2.06	0.074	2300	2000	3390	**9.6** 21.1
23222	**110** 4.3307	**200** 7.8740	**69.8** 2.7480	**710** 160000	**887** 199000	EM	**2** 0.08	**131** 5.2	**182** 7.2	0.32	2.11	3.14	2.06	0.074	2300	2000	3100	**9.6** 21.1
22322	**110** 4.3307	**240** 9.4488	**80** 3.1496	**949** 213000	**1050** 236000	EJ	**2.5** 0.1	**144** 5.7	**215** 8.5	0.32	2.08	3.10	2.04	0.079	2500	2100	2890	**17.8** 39.2
22322	**110** 4.3307	**240** 9.4488	**80** 3.1496	**949** 213000	**1050** 236000	EM	**2.5** 0.1	**144** 5.7	**215** 8.5	0.32	2.08	3.10	2.04	0.079	2500	2200	3540	**17.8** 39.2
23322	**110** 4.3307	**240** 9.4488	**92.1** 3.6260	**979** 220000	**1080** 243000	EM	**2.5** 0.1	**136** 5.4	**209** 8.2	0.40	1.67	2.49	1.63	0.077	1800	1600	2490	**20.4** 44.9
23024	**120** 4.7244	**180** 7.0866	**46** 1.8110	**408** 91700	**574** 129000	EJ	**2** 0.08	**134** 5.3	**167** 6.6	0.22	3.02	4.49	2.95	0.074	3300	2700	4260	**4.0** 8.8
24024	**120** 4.7244	**180** 7.0866	**60** 2.3622	**523** 117000	**762** 171000	EJ	**2** 0.08	**132** 5.2	**167** 6.6	0.29	2.32	3.45	2.26	0.073	2700	2200	3410	**5.2** 11.4
23124	**120** 4.7244	**200** 7.8740	**62** 2.4409	**621** 140000	**816** 183000	EJ	**2** 0.08	**138** 5.4	**182** 7.2	0.28	2.38	3.54	2.32	0.075	2600	2200	3460	**7.9** 17.4
23124	**120** 4.7244	**200** 7.8740	**62** 2.4409	**621** 140000	**816** 183000	EM	**2** 0.08	**138** 5.4	**182** 7.2	0.28	2.38	3.54	2.32	0.075	2600	2200	3420	**7.9** 17.4
24124	**120** 4.7244	**200** 7.8740	**80** 3.1496	**778** 175000	**1080** 242000	EJ	**2** 0.08	**135** 5.3	**182** 7.2	0.36	1.86	2.77	1.82	0.075	1700	1600	2660	**10.0** 22.0
22224	**120** 4.7244	**215** 8.4646	**58** 2.2835	**647** 145000	**772** 174000	EJ	**2** 0.08	**143** 5.6	**196** 7.7	0.25	2.70	4.02	2.64	0.078	3200	2600	4060	**9.0** 19.8
22224	**120** 4.7244	**215** 8.4646	**58** 2.2835	**647** 145000	**772** 174000	EM	**2** 0.08	**143** 5.6	**196** 7.7	0.25	2.70	4.02	2.64	0.078	3200	2600	4440	**9.0** 19.8
23224	**120** 4.7244	**215** 8.4646	**76** 2.9921	**824** 185000	**1040** 234000	EJ	**2** 0.08	**142** 5.6	**197** 7.7	0.32	2.10	3.13	2.05	0.078	2100	1800	3100	**11.8** 26.0
23224	**120** 4.7244	**215** 8.4646	**76** 2.9921	**824** 185000	**1040** 234000	EM	**2** 0.08	**142** 5.6	**197** 7.7	0.32	2.10	3.13	2.05	0.078	2100	1800	2910	**11.8** 26.0
22324	**120** 4.7244	**260** 10.2362	**86** 3.3858	**1080** 244000	**1210** 272000	EJ	**2.5** 0.1	**157** 6.2	**234** 9.2	0.32	2.11	3.15	2.07	0.083	2200	1900	2680	**21.4** 48.4

[1]Maximum shaft or housing fillet radius that bearing corners will clear.

[2]These factors apply for both inch and metric calculations. See engineering section for instructions on use.

[3]Geometry constant for Lubrication Life Factor a31 is found in the Bearing Ratings section of the Engineering Manual (order no. 10424).

[4]See thermal reference speed in the Engineering Manual (order no. 10424) and on page 61.

[5]See limiting speed on page 61.

Continued on next page.

SPHERICAL ROLLER BEARINGS – *continued*

- Shaft and housing fits, internal clearances, tolerances and other technical data for these bearings are found in the engineering section of this catalog and the Timken Engineering Manual (order no. 10424).
- Bearings are available with a tapered bore for adapter-type mounting. To order, add the suffix "K" to bearing number (e.g., 23120K).
- Consult your Timken sales engineer for up-to-date information about the availability of the bearings you have selected.

Continued from previous page.

Bearing Part Number	Bearing Dimensions			Load Ratings		Cage Type	Mounting Data			Equivalent Radial Load Factors[2]				Geometry Factor[3] C_g	Speed Reference			Weight
	Bore d	O.D. D	Width B	Dynamic C	Static C_o		Fillet[1] (Max.) R	Backing Diameter Shaft d_a	Backing Diameter Housing D_a	Dynamic e	Dynamic $\frac{F_a}{F_r} \le e$ X = 1 Y	Dynamic $\frac{F_a}{F_r} > e$ X = 0.67 Y	Static In All Cases Y_0		Thermal Reference Speed[4] Oil	Thermal Reference Speed[4] Grease	Limiting Speed[5]	
	mm in.	mm in.	mm in.	kN lbf.	kN lbf.		mm in.	mm in.	mm in.						RPM	RPM	RPM	kg lbs.
22324	**120** 4.7244	**260** 10.2362	**86** 3.3858	**1080** 244000	**1210** 272000	EM	**2.5** 0.1	**157** 6.2	**234** 9.2	0.32	2.11	3.15	2.07	0.083	2200	1900	3320	**22.3** 49.1
23324	**120** 4.7244	**260** 10.2362	**106** 4.1732	**1230** 276000	**1410** 318000	EM	**2.5** 0.1	**147** 5.8	**226** 8.9	0.43	1.57	2.34	1.54	0.082	1500	1400	2310	**27.8** 61.2
23926	**130** 5.1181	**180** 7.0866	**37** 1.4567	**302** 67900	**453** 102000	EM	**1** 0.04	**142** 5.6	**169** 6.7	0.18	3.83	5.70	3.75	0.076	300	2400	3460	**2.8** 6.2
23026	**130** 5.1181	**200** 7.8740	**52** 2.0472	**518** 116000	**723** 162000	EJ	**2** 0.08	**146** 5.8	**185** 7.3	0.23	2.94	4.37	2.87	0.078	3100	2500	3890	**5.9** 13.0
24026	**130** 5.1181	**200** 7.8740	**69** 2.7165	**664** 149000	**966** 217000	EJ	**2** 0.08	**144** 5.7	**185** 7.3	0.31	2.21	3.29	2.16	0.078	2400	2000	3040	**7.8** 17.2
23126	**130** 5.1181	**210** 8.2677	**64** 2.5197	**679** 153000	**937** 211000	EJ	**2** 0.08	**149** 5.9	**193** 7.6	0.27	2.48	3.69	2.43	0.080	2400	2000	3240	**8.6** 18.9
23126	**130** 5.1181	**210** 8.2677	**64** 2.5197	**679** 153000	**937** 211000	EM	**2** 0.08	**149** 5.9	**193** 7.6	0.27	2.48	3.69	2.43	0.080	2400	2000	3300	**8.6** 18.9
24126	**130** 5.1181	**210** 8.2677	**80** 3.1496	**798** 179000	**1130** 255000	EJ	**2** 0.08	**146** 5.7	**192** 7.6	0.34	1.99	2.96	1.94	0.079	1600	1500	2490	**10.5** 23.1
22226	**130** 5.1181	**230** 9.0551	**64** 2.5197	**757** 170000	**945** 212000	EJ	**2.5** 0.1	**155** 6.1	**210** 8.3	0.26	2.62	3.90	2.56	0.082	2900	2400	3750	**11.3** 24.9
22226	**130** 5.1181	**230** 9.0551	**64** 2.5197	**757** 170000	**945** 212000	EM	**2.5** 0.1	**155** 6.1	**210** 8.3	0.26	2.62	3.90	2.56	0.082	2900	2400	4280	**11.3** 24.9
23226	**130** 5.1181	**230** 9.0551	**80** 3.1496	**915** 206000	**1170** 262000	EJ	**2.5** 0.1	**153** 6.0	**211** 8.3	0.32	2.14	3.19	2.09	0.082	1900	1700	2910	**14.0** 30.8
23226	**130** 5.1181	**230** 9.0551	**80** 3.1496	**915** 206000	**1170** 262000	EM	**2.5** 0.1	**153** 6.0	**211** 8.3	0.32	2.14	3.19	2.09	0.082	1900	1700	2740	**14.0** 30.8
22326	**130** 5.1181	**280** 11.0236	**93** 3.6614	**1250** 281000	**1410** 318000	EJ	**3** 0.1	**169** 6.7	**252** 9.9	0.32	2.11	3.14	2.06	0.087	2000	1800	2520	**26.7** 60.3
22326	**130** 5.1181	**280** 11.0236	**93** 3.6614	**1250** 281000	**1410** 318000	EM	**3** 0.1	**169** 6.7	**252** 9.9	0.32	2.11	3.14	2.06	0.087	2000	1800	3090	**27.8** 61.2
23326	**130** 5.1181	**280** 11.0236	**112** 4.4094	**1340** 302000	**1590** 359000	EM	**3** 0.1	**164** 6.5	**245** 9.6	0.42	1.62	2.42	1.59	0.086	1400	1200	2130	**33.8** 74.4
23928	**140** 5.5118	**190** 7.4803	**37** 1.4567	**314** 70500	**477** 107000	EM	**1.5** 0.06	**152** 6.0	**180** 7.1	0.16	4.10	6.10	4.01	0.079	2800	2200	3340	**2.9** 6.4
23028	**140** 5.5118	**210** 8.2677	**53** 2.0866	**551** 124000	**802** 180000	EJ	**2** 0.08	**158** 6.2	**196** 7.7	0.22	3.10	4.61	3.03	0.082	2800	2300	3480	**6.2** 13.6
24028	**140** 5.5118	**210** 8.2677	**69** 2.7165	**702** 158000	**1060** 238000	EJ	**2** 0.08	**154** 6.1	**195** 7.7	0.29	2.36	3.51	2.31	0.081	2100	1800	2980	**8.2** 18.0

[1]Maximum shaft or housing fillet radius that bearing corners will clear.
[2]These factors apply for both inch and metric calculations. See engineering section for instructions on use.
[3]Geometry constant for Lubrication Life Factor a31 is found in the Bearing Ratings section of the Engineering Manual (order no. 10424).
[4]See thermal reference speed in the Engineering Manual (order no. 10424) and on page 61.
[5]See limiting speed on page 61.

Continued on next page.

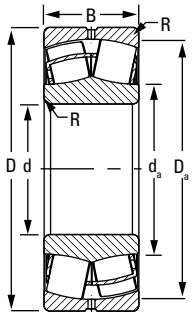

EJ

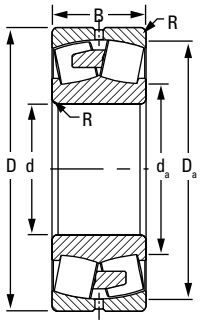

EM/YM

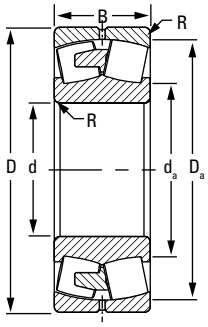

EMB/YMB

Continued from previous page.

Bearing Part Number	Bearing Dimensions			Load Ratings		Cage Type	Mounting Data			Equivalent Radial Load Factors[2]				Geometry Factor[3] C_g	Speed Reference			Weight
	Bore d	O.D. D	Width B	Dynamic C	Static C_o		Fillet[1] (Max.) R	Backing Diameter Shaft d_a	Backing Diameter Housing D_a	e	Dynamic $\frac{F_a}{F_r} \le e$ X = 1 Y	Dynamic $\frac{F_a}{F_r} > e$ X = 0.67 Y	Static In All Cases Y_0		Thermal Reference Speed[4] Oil	Thermal Reference Speed[4] Grease	Limiting Speed[5]	
	mm in.	mm in.	mm in.	kN lbf.	kN lbf.		mm in.	mm in.	mm in.						RPM	RPM	RPM	kg lbs.
23128	**140** 5.5118	**225** 8.8583	**68** 2.6772	**766** 172000	**1070** 240000	EJ	**2** 0.08	**160** 6.3	**208** 8.2	0.27	2.50	3.72	2.45	0.083	2100	1800	2960	**10.4** 22.9
23128	**140** 5.5118	**225** 8.8583	**68** 2.6772	**766** 172000	**1070** 240000	EM	**2** 0.08	**160** 6.3	**208** 8.2	0.27	2.50	3.72	2.45	0.083	2100	1800	3160	**10.2** 22.3
24128	**140** 5.5118	**225** 8.8583	**85** 3.3465	**894** 201000	**1290** 289000	EJ	**2** 0.08	**157** 6.2	**206** 8.1	0.34	2.01	2.99	1.96	0.082	1500	1300	2290	**12.7** 27.9
26228	**140** 5.5118	**240** 9.4488	**80** 3.1496	**863** 194000	**1110** 249000	EM	**2.5** 0.1	**161** 6.3	**218** 8.6	0.32	2.08	3.10	2.04	0.083	1500	1300	1840	**14.7** 32.3
22228	**140** 5.5118	**250** 9.8425	**68** 2.6772	**863** 194000	**1060** 237000	EJ	**2.5** 0.1	**167** 6.6	**228** 9.0	0.25	2.67	3.98	2.61	0.086	2600	2200	3500	**14.2** 31.2
22228	**140** 5.5118	**250** 9.8425	**68** 2.6772	**863** 194000	**1060** 237000	EM	**2.5** 0.1	**167** 6.6	**228** 9.0	0.25	2.67	3.98	2.61	0.086	2600	2200	3900	**14.2** 31.2
23228	**140** 5.5118	**250** 9.8425	**88** 3.4646	**1090** 246000	**1410** 317000	EJ	**2.5** 0.1	**165** 6.5	**229** 9.0	0.32	2.11	3.13	2.06	0.086	1700	1500	2700	**18.0** 39.6
23228	**140** 5.5118	**250** 9.8425	**88** 3.4646	**1090** 246000	**1410** 317000	EM	**2.5** 0.1	**165** 6.5	**229** 9.0	0.32	2.11	3.13	2.06	0.086	1700	1500	2610	**18.5** 40.6
22328	**140** 5.5118	**300** 11.8110	**102** 4.0157	**1450** 326000	**1670** 375000	EJ	**3** 0.1	**182** 7.1	**270** 10.6	0.33	2.06	3.06	2.01	0.091	1800	1600	2360	**33.6** 73.9
22328	**140** 5.5118	**300** 11.8110	**102** 4.0157	**1450** 326000	**1670** 375000	EM	**3** 0.1	**182** 7.1	**270** 10.6	0.33	2.06	3.06	2.01	0.091	1800	1600	2970	**34.2** 75.3
23328	**140** 5.5118	**300** 11.8110	**118** 4.6457	**1570** 352000	**1910** 429000	EMB	**3** 0.1	**175** 6.9	**261** 10.3	0.41	1.65	2.45	1.61	0.091	1200	1100	1900	**41.7** 91.7
23030	**150** 5.9055	**225** 8.8583	**56** 2.2047	**621** 140000	**911** 205000	EJ	**2** 0.08	**169** 6.7	**210** 8.3	0.21	3.14	4.68	3.07	0.086	2600	2100	3220	**7.5** 16.6
23030	**150** 5.9055	**225** 8.8583	**56** 2.2047	**621** 140000	**911** 205000	EM	**2** 0.08	**169** 6.7	**210** 8.3	0.21	3.14	4.68	3.07	0.086	2600	2100	3190	**7.7** 16.9
24030	**150** 5.9055	**225** 8.8583	**75** 2.9528	**808** 182000	**1240** 278000	EJ	**2** 0.08	**165** 6.5	**209** 8.2	0.29	2.32	3.46	2.27	0.085	2000	1700	2800	**10.2** 22.3
23130	**150** 5.9055	**250** 9.8425	**80** 3.1496	**1000** 225000	**1390** 312000	EJ	**2** 0.08	**173** 6.8	**229** 9.0	0.29	2.32	3.45	2.26	0.088	1900	1600	2690	**15.5** 34.2
23130	**150** 5.9055	**250** 9.8425	**80** 3.1496	**1000** 225000	**1390** 312000	EM	**2** 0.08	**173** 6.8	**229** 9.0	0.29	2.32	3.45	2.26	0.088	1900	1600	2920	**15.5** 34.2

[1]Maximum shaft or housing fillet radius that bearing corners will clear.

[2]These factors apply for both inch and metric calculations. See engineering section for instructions on use.

[3]Geometry constant for Lubrication Life Factor a31 is found in the Bearing Ratings section of the Engineering Manual (order no. 10424).

[4]See thermal reference speed in the Engineering Manual (order no. 10424) and on page 61.

[5]See limiting speed on page 61.

Continued on next page.

SPHERICAL ROLLER BEARINGS – *continued*

- Shaft and housing fits, internal clearances, tolerances and other technical data for these bearings are found in the engineering section of this catalog and the Timken Engineering Manual (order no. 10424).
- Bearings are available with a tapered bore for adapter-type mounting. To order, add the suffix "K" to bearing number (e.g., 23120K).
- Consult your Timken sales engineer for up-to-date information about the availability of the bearings you have selected.

Continued from previous page.

Bearing Part Number	Bearing Dimensions			Load Ratings		Cage Type	Mounting Data			Equivalent Radial Load Factors[2]				Geometry Factor[3] C_g	Speed Reference			Weight
	Bore d	O.D. D	Width B	Dynamic C	Static C_o		Fillet[1] (Max.) R	Backing Diameter Shaft d_a	Backing Diameter Housing D_a	Dynamic e	Dynamic $\frac{F_a}{F_r} \le e$ X = 1 Y	Dynamic $\frac{F_a}{F_r} > e$ X = 0.67 Y	Static In All Cases Y_0		Thermal Reference Speed[4] Oil	Thermal Reference Speed[4] Grease	Limiting Speed[5]	
	mm in.	mm in.	mm in.	kN lbf.	kN lbf.		mm in.	mm in.	mm in.						RPM	RPM	RPM	kg lbs.
24130	**150** 5.9055	**250** 9.8425	**100** 3.9370	**1180** 264000	**1680** 378000	EJ	**2** 0.08	**169** 6.7	**227** 8.9	0.36	1.86	2.77	1.82	0.087	1300	1200	2070	**19.4** 42.7
22230	**150** 5.9055	**270** 10.6299	**73** 2.8740	**1000** 225000	**1230** 276000	EJ	**2.5** 0.1	**179** 7.0	**246** 9.7	0.25	2.69	4.00	2.63	0.090	2400	2000	3250	**17.5** 39.2
22230	**150** 5.9055	**270** 10.6299	**73** 2.8740	**1000** 225000	**1230** 276000	EM	**2.5** 0.1	**179** 7.0	**246** 9.7	0.25	2.69	4.00	2.63	0.090	2400	2000	3600	**17.8** 39.2
23230	**150** 5.9055	**270** 10.6299	**96** 3.7795	**1270** 286000	**1660** 372000	EJ	**2.5** 0.1	**178** 7.0	**247** 9.7	0.32	2.08	3.10	2.04	0.090	1500	1400	2540	**23.0** 52.4
23230	**150** 5.9055	**270** 10.6299	**96** 3.7795	**1270** 286000	**1660** 372000	EM	**2.5** 0.1	**178** 7.0	**247** 9.7	0.32	2.08	3.10	2.04	0.090	1500	1400	2440	**23.8** 52.4
22330	**150** 5.9055	**320** 12.5984	**108** 4.2520	**1620** 365000	**1890** 424000	EJ	**3** 0.1	**194** 7.6	**288** 11.3	0.33	2.08	3.09	2.03	0.088	1600	1500	2200	**40.6** 94.6
22330	**150** 5.9055	**320** 12.5984	**108** 4.2520	**1620** 365000	**1890** 424000	EMB	**3** 0.1	**194** 7.6	**288** 11.3	0.33	2.08	3.09	2.03	0.088	1600	1500	1950	**43.0** 94.6
23330	**150** 5.9055	**320** 12.5984	**128** 5.0394	**1780** 400000	**2130** 479000	EMB	**3** 0.1	**185** 7.3	**280** 11.0	0.41	1.64	2.44	1.60	0.087	1100	1000	1630	**50.4** 111.0
23932	**160** 6.2992	**220** 8.6614	**45** 1.7717	**421** 94700	**654** 147000	EM	**2** 0.08	**175** 6.9	**207** 8.2	0.18	3.78	5.63	3.70	0.086	2500	2100	2970	**4.9** 10.8
23032	**160** 6.2992	**240** 9.4488	**60** 2.3622	**705** 159000	**1040** 235000	EJ	**2** 0.08	**180** 7.1	**224** 8.8	0.22	3.12	4.65	3.05	0.089	2400	2000	3080	**9.3** 20.4
23032	**160** 6.2992	**240** 9.4488	**60** 2.3622	**705** 159000	**1040** 235000	EM	**2** 0.08	**180** 7.1	**224** 8.8	0.22	3.12	4.65	3.05	0.089	2400	2000	3080	**9.3** 20.4
24032	**160** 6.2992	**240** 9.4488	**80** 3.1496	**914** 206000	**1410** 317000	EJ	**2** 0.08	**176** 6.9	**223** 8.8	0.29	2.32	3.45	2.27	0.089	1800	1500	2670	**12.5** 27.5
23132	**160** 6.2992	**270** 10.6299	**86** 3.3858	**1160** 261000	**1580** 354000	EJ	**2** 0.08	**185** 7.3	**248** 9.8	0.29	2.33	3.46	2.27	0.092	1700	1500	2520	**19.7** 43.3
23132	**160** 6.2992	**270** 10.6299	**86** 3.3858	**1160** 261000	**1580** 354000	EM	**2** 0.08	**185** 7.3	**248** 9.8	0.29	2.33	3.46	2.27	0.092	1700	1500	2710	**20.2** 44.4
24132	**160** 6.2992	**270** 10.6299	**109** 4.2913	**1390** 313000	**2000** 449000	EJ	**2** 0.08	**181** 7.1	**245** 9.7	0.37	1.84	2.74	1.80	0.091	1100	1000	1920	**25.1** 55.2
22232	**160** 6.2992	**290** 11.4173	**80** 3.1496	**1120** 253000	**1370** 309000	EJ	**2.5** 0.1	**192** 7.5	**264** 10.4	0.26	2.62	3.91	2.57	0.093	2200	1900	2980	**21.9** 50.6
22232	**160** 6.2992	**290** 11.4173	**80** 3.1496	**1120** 253000	**1370** 309000	EM	**2.5** 0.1	**192** 7.5	**264** 10.4	0.26	2.62	3.91	2.57	0.093	2200	1900	3380	**23.0** 50.6
23232	**160** 6.2992	**290** 11.4173	**104** 4.0945	**1470** 330000	**1940** 435000	EJ	**2.5** 0.1	**190** 7.5	**264** 10.4	0.33	2.06	3.06	2.01	0.094	1400	1200	2360	**29.3** 64.3

[1]Maximum shaft or housing fillet radius that bearing corners will clear.
[2]These factors apply for both inch and metric calculations. See engineering section for instructions on use.
[3]Geometry constant for Lubrication Life Factor a31 is found in the Bearing Ratings section of the Engineering Manual (order no. 10424).
[4]See thermal reference speed in the Engineering Manual (order no. 10424) and on page 61.
[5]See limiting speed on page 61.

Continued on next page.

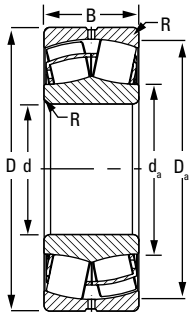

EJ

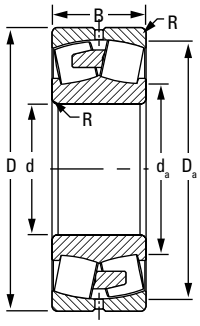

EM/YM

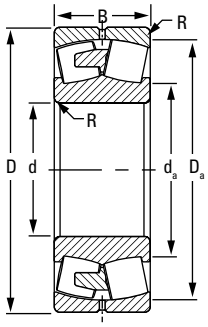

EMB/YMB

Continued from previous page.

Bearing Part Number	Bearing Dimensions			Load Ratings		Cage Type	Mounting Data			Equivalent Radial Load Factors[2]				Geometry Factor[3] C_g	Speed Reference			Weight
	Bore d	O.D. D	Width B	Dynamic C	Static C_o		Fillet[1] (Max.) R	Backing Diameter Shaft d_a	Backing Diameter Housing D_a	e	Dynamic $\frac{F_a}{F_r} \le e$ X = 1 Y	Dynamic $\frac{F_a}{F_r} > e$ X = 0.67 Y	Static In All Cases Y_0		Thermal Reference Speed[4] Oil	Thermal Reference Speed[4] Grease	Limiting Speed[5]	
	mm in.	mm in.	mm in.	kN lbf.	kN lbf.		mm in.	mm in.	mm in.						RPM	RPM	RPM	kg lbs.
23232	**160** 6.2992	**290** 11.4173	**104** 4.0945	**1470** 330000	**1940** 435000	EM	**2.5** 0.1	**190** 7.5	**264** 10.4	0.33	2.06	3.06	2.01	0.094	1400	1200	2310	**30.0** 66.0
22332	**160** 6.2992	**340** 13.3858	**114** 4.4882	**1800** 405000	**2110** 475000	EJ	**3** 0.1	**207** 8.1	**306** 12.0	0.32	2.09	3.11	2.04	0.092	1500	1300	2060	**51.0** 112.2
22332	**160** 6.2992	**340** 13.3858	**114** 4.4882	**1800** 405000	**2110** 475000	EMB	**3** 0.1	**207** 8.1	**306** 12.0	0.32	2.09	3.11	2.04	0.092	1500	1300	1800	**51.0** 112.2
23332	**160** 6.2992	**340** 13.3858	**136** 5.3543	**2000** 449000	**2530** 568000	EMB	**3** 0.1	**202** 8.0	**297** 11.7	0.42	1.62	2.41	1.58	0.091	990	900	1590	**61.2** 134.7
23934	**170** 6.6929	**230** 9.0551	**45** 1.7717	**453** 102000	**716** 161000	EM	**2** 0.08	**184** 7.2	**217** 8.6	0.17	4.07	6.05	3.97	0.090	2300	1900	2990	**5.2** 11.4
23034	**170** 6.6929	**260** 10.2362	**67** 2.6378	**858** 193000	**1250** 282000	EJ	**2** 0.08	**192** 7.6	**242** 9.5	0.22	3.02	4.49	2.95	0.093	2200	1800	2820	**12.5** 27.5
23034	**170** 6.6929	**260** 10.2362	**67** 2.6378	**858** 193000	**1250** 282000	EM	**2** 0.08	**192** 7.6	**242** 9.5	0.22	3.02	4.49	2.95	0.093	2200	1800	2870	**12.5** 27.5
24034	**170** 6.6929	**260** 10.2362	**90** 3.5433	**1030** 233000	**1570** 354000	EJ	**2** 0.08	**189** 7.4	**240** 9.5	0.30	2.22	3.30	2.17	0.092	1700	1500	2460	**16.7** 37.8
23134	**170** 6.6929	**280** 11.0236	**88** 3.4646	**1220** 274000	**1710** 384000	EJ	**2** 0.08	**195** 7.7	**258** 10.1	0.28	2.39	3.55	2.33	0.095	1600	1400	2420	**21.1** 46.5
23134	**170** 6.6929	**280** 11.0236	**88** 3.4646	**1220** 274000	**1710** 384000	EM	**2** 0.08	**195** 7.7	**258** 10.1	0.28	2.39	3.55	2.33	0.095	1600	1400	2620	**21.7** 47.7
24134	**170** 6.6929	**280** 11.0236	**109** 4.2913	**1440** 324000	**2110** 475000	EJ	**2** 0.08	**192** 7.5	**255** 10.1	0.35	1.93	2.87	1.88	0.094	1000	960	1830	**26.4** 57.8
22234	**170** 6.6929	**310** 12.2047	**86** 3.3858	**1290** 290000	**1590** 359000	EJ	**3** 0.1	**204** 8.0	**281** 11.1	0.26	2.61	3.89	2.55	0.090	2000	1700	2780	**27.3** 62.7
22234	**170** 6.6929	**310** 12.2047	**86** 3.3858	**1290** 290000	**1590** 359000	EM	**3** 0.1	**204** 8.0	**281** 11.1	0.26	2.61	3.89	2.55	0.090	2000	1700	3180	**28.5** 62.7
23234	**170** 6.6929	**310** 12.2047	**110** 4.3307	**1660** 373000	**2200** 494000	EJ	**3** 0.1	**202** 8.0	**281** 11.1	0.33	2.08	3.09	2.03	0.091	1200	1100	2220	**35.8** 78.8
23234	**170** 6.6929	**310** 12.2047	**110** 4.3307	**1660** 373000	**2200** 494000	EM	**3** 0.1	**202** 8.0	**281** 11.1	0.33	2.08	3.09	2.03	0.091	1200	1100	2190	**36.6** 80.5
22334	**170** 6.6929	**360** 14.1732	**120** 4.7244	**2000** 450000	**2360** 530000	EJ	**3** 0.1	**219** 8.6	**325** 12.8	0.32	2.11	3.15	2.07	0.096	1400	1200	1980	**59.9** 131.8

[1]Maximum shaft or housing fillet radius that bearing corners will clear.

[2]These factors apply for both inch and metric calculations. See engineering section for instructions on use.

[3]Geometry constant for Lubrication Life Factor a31 is found in the Bearing Ratings section of the Engineering Manual (order no. 10424).

[4]See thermal reference speed in the Engineering Manual (order no. 10424) and on page 61.

[5]See limiting speed on page 61.

Continued on next page.

SPHERICAL ROLLER BEARINGS – *continued*

- Shaft and housing fits, internal clearances, tolerances and other technical data for these bearings are found in the engineering section of this catalog and the Timken Engineering Manual (order no. 10424).
- Bearings are available with a tapered bore for adapter-type mounting. To order, add the suffix "K" to bearing number (e.g., 23120K).
- Consult your Timken sales engineer for up-to-date information about the availability of the bearings you have selected.

Continued from previous page.

Bearing Part Number	Bearing Dimensions			Load Ratings		Cage Type	Mounting Data			Equivalent Radial Load Factors[2]				Geometry Factor[3] C_g	Speed Reference			Weight
	Bore d	O.D. D	Width B	Dynamic C	Static C_o		Fillet[1] (Max.) R	Backing Diameter Shaft d_a	Backing Diameter Housing D_a	Dynamic e	Dynamic $\frac{F_a}{F_r} \le e$ X = 1 Y	Dynamic $\frac{F_a}{F_r} > e$ X = 0.67 Y	Static In All Cases Y_0		Thermal Reference Speed[4] Oil	Thermal Reference Speed[4] Grease	Limiting Speed[5]	
	mm in.	mm in.	mm in.	kN lbf.	kN lbf.		mm in.	mm in.	mm in.						RPM	RPM	RPM	kg lbs.
22334	**170** 6.6929	**360** 14.1732	**120** 4.7244	**2000** 450000	**2360** 530000	EMB	**3** 0.1	**219** 8.6	**325** 12.8	0.32	2.11	3.15	2.07	0.096	1400	1200	1680	**59.9** 131.8
23334	**170** 6.6929	**360** 14.1732	**140** 5.5118	**2170** 487000	**2580** 581000	EMB	**3** 0.1	**208** 8.2	**315** 12.4	0.40	1.67	2.49	1.63	0.094	950	860	1440	**70.3** 154.7
23936	**180** 7.0866	**250** 9.8425	**52** 2.0472	**572** 129000	**907** 204000	EJ	**2** 0.08	**197** 7.8	**235** 9.3	0.18	3.77	5.62	3.69	0.094	2200	1800	2890	**7.6** 16.7
23936	**180** 7.0866	**250** 9.8425	**52** 2.0472	**572** 129000	**907** 204000	EM	**2** 0.08	**197** 7.8	**235** 9.3	0.18	3.77	5.62	3.69	0.094	2200	1800	2840	**7.6** 16.7
23036	**180** 7.0866	**280** 11.0236	**74** 2.9134	**1020** 229000	**1480** 332000	EJ	**2** 0.08	**204** 8.0	**260** 10.2	0.23	2.91	4.34	2.85	0.097	2000	1700	2620	**16.8** 37.0
23036	**180** 7.0866	**280** 11.0236	**74** 2.9134	**1020** 229000	**1480** 332000	EM	**2** 0.08	**204** 8.0	**260** 10.2	0.23	2.91	4.34	2.85	0.097	2000	1700	2660	**16.8** 37.0
24036	**180** 7.0866	**280** 11.0236	**100** 3.9370	**1320** 296000	**2040** 460000	EJ	**2** 0.08	**200** 7.9	**258** 10.2	0.32	2.13	3.17	2.08	0.097	1500	1300	2280	**22.6** 49.7
23136	**180** 7.0866	**300** 11.8110	**96** 3.7795	**1410** 317000	**2000** 449000	EJ	**2.5** 0.1	**208** 8.2	**275** 10.8	0.29	2.32	3.45	2.27	0.099	1500	1300	2250	**27.6** 60.7
23136	**180** 7.0866	**300** 11.8110	**96** 3.7795	**1410** 317000	**2000** 449000	EM	**2.5** 0.1	**208** 8.2	**275** 10.8	0.29	2.32	3.45	2.27	0.099	1500	1300	2470	**27.6** 60.7
24136	**180** 7.0866	**300** 11.8110	**118** 4.6457	**1650** 370000	**2450** 550000	EJ	**2.5** 0.1	**204** 8.1	**273** 10.7	0.36	1.90	2.82	1.85	0.098	950	870	1700	**33.4** 73.5
22236	**180** 7.0866	**320** 12.5984	**86** 3.3858	**1340** 301000	**1700** 382000	EJ	**3** 0.1	**215** 8.5	**292** 11.5	0.25	2.72	4.05	2.66	0.094	1900	1600	2690	**29.1** 64.0
22236	**180** 7.0866	**320** 12.5984	**86** 3.3858	**1340** 301000	**1700** 382000	EM	**3** 0.1	**215** 8.5	**292** 11.5	0.25	2.72	4.05	2.66	0.093	1900	1600	3030	**29.4** 64.7
23236	**180** 7.0866	**320** 12.5984	**112** 4.4094	**1720** 387000	**2290** 515000	EJ	**3** 0.1	**211** 8.3	**292** 11.5	0.32	2.11	3.15	2.07	0.093	1200	1100	2150	**39.0** 85.0
23236	**180** 7.0866	**320** 12.5984	**112** 4.4094	**1720** 387000	**2290** 515000	EMB	**3** 0.1	**211** 8.3	**292** 11.5	0.32	2.11	3.15	2.07	0.093	1200	1100	1510	**38.6** 84.9
22336	**180** 7.0866	**380** 14.9606	**126** 4.9606	**2190** 491000	**2600** 584000	EJ	**3** 0.1	**232** 9.2	**343** 13.5	0.32	2.13	3.17	2.08	0.099	1300	1200	1890	**69.0** 153.0
22336	**180** 7.0866	**380** 14.9606	**126** 4.9606	**2190** 491000	**2600** 584000	EMB	**3** 0.1	**232** 9.2	**343** 13.5	0.32	2.13	3.17	2.08	0.099	1300	1200	1570	**69.0** 153.0
23938	**190** 7.4803	**260** 10.2362	**52** 2.0472	**589** 133000	**964** 217000	EM	**2** 0.08	**207** 8.2	**245** 9.6	0.17	4.01	5.97	3.92	0.097	2000	1700	2710	**8.0** 17.6
23038	**190** 7.4803	**290** 11.4173	**75** 2.9528	**1060** 239000	**1580** 355000	EJ	**2** 0.08	**214** 8.4	**270** 10.6	0.23	3.00	4.47	2.93	0.100	1900	1600	2470	**17.8** 39.2

[1]Maximum shaft or housing fillet radius that bearing corners will clear.
[2]These factors apply for both inch and metric calculations. See engineering section for instructions on use.
[3]Geometry constant for Lubrication Life Factor a31 is found in the Bearing Ratings section of the Engineering Manual (order no. 10424).
[4]See thermal reference speed in the Engineering Manual (order no. 10424) and on page 61.
[5]See limiting speed on page 61.

Continued on next page.

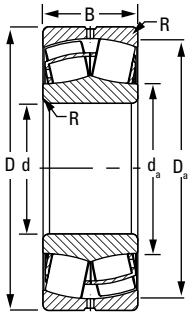

EJ

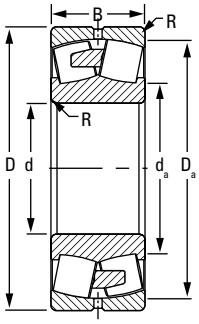

EM/YM

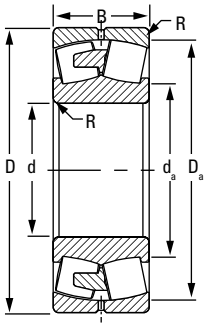

EMB/YMB

Continued from previous page.

Bearing Part Number	Bearing Dimensions			Load Ratings		Cage Type	Mounting Data			Equivalent Radial Load Factors[2]				Geometry Factor[3] C_g	Speed Reference			Weight
	Bore d	O.D. D	Width B	Dynamic C	Static C_o		Fillet[1] (Max.) R	Backing Diameter Shaft d_a	Backing Diameter Housing D_a	e	Dynamic $\frac{F_a}{F_r} \le e$ X = 1 Y	Dynamic $\frac{F_a}{F_r} > e$ X = 0.67 Y	Static In All Cases Y_0		Thermal Reference Speed[4] Oil	Thermal Reference Speed[4] Grease	Limiting Speed[5]	
	mm in.	mm in.	mm in.	kN lbf.	kN lbf.		mm in.	mm in.	mm in.						RPM	RPM	RPM	kg lbs.
23038	**190** 7.4803	**290** 11.4173	**75** 2.9528	**1060** 239000	**1580** 355000	EM	**2** 0.08	**214** 8.4	**270** 10.6	0.23	3.00	4.47	2.93	0.100	1900	1600	2570	**17.8** 39.2
24038	**190** 7.4803	**290** 11.4173	**100** 3.9370	**1330** 300000	**2100** 473000	EJ	**2** 0.08	**210** 8.3	**268** 10.6	0.31	2.20	3.27	2.15	0.100	1400	1200	2180	**24.0** 52.0
24038	**190** 7.4803	**290** 11.4173	**100** 3.9370	**1330** 300000	**2100** 473000	EM	**2** 0.08	**210** 8.3	**268** 10.6	0.31	2.20	3.27	2.15	0.100	1400	1200	2000	**24.0** 52.0
23138	**190** 7.4803	**320** 12.5984	**104** 4.0945	**1630** 365000	**2340** 525000	EJ	**2.5** 0.1	**221** 8.7	**293** 11.5	0.30	2.26	3.36	2.21	0.095	1400	1200	2120	**33.9** 74.6
23138	**190** 7.4803	**320** 12.5984	**104** 4.0945	**1630** 365000	**2340** 525000	EM	**2.5** 0.1	**221** 8.7	**293** 11.5	0.30	2.26	3.36	2.21	0.095	1400	1200	2340	**34.7** 76.4
24138	**190** 7.4803	**320** 12.5984	**128** 5.0394	**1870** 421000	**2760** 619000	EJ	**2.5** 0.1	**215** 8.5	**290** 11.4	0.36	1.85	2.76	1.81	0.094	880	810	1570	**42.0** 92.0
22238	**190** 7.4803	**340** 13.3858	**92** 3.6220	**1550** 348000	**1960** 440000	EJ	**3** 0.1	**226** 8.9	**310** 12.2	0.25	2.67	3.98	2.62	0.097	1800	1500	2540	**35.0** 77.0
22238	**190** 7.4803	**340** 13.3858	**92** 3.6220	**1550** 348000	**1960** 440000	EMB	**3** 0.1	**226** 8.9	**310** 12.2	0.25	2.67	3.98	2.62	0.097	1800	1500	2130	**36.0** 79.0
23238	**190** 7.4803	**340** 13.3858	**120** 4.7244	**1940** 436000	**2610** 586000	EJ	**3** 0.1	**225** 8.9	**311** 12.2	0.32	2.10	3.12	2.05	0.097	1100	980	2040	**47.0** 104.0
23238	**190** 7.4803	**340** 13.3858	**120** 4.7244	**1940** 436000	**2610** 586000	EMB	**3** 0.1	**225** 8.9	**311** 12.2	0.32	2.10	3.12	2.05	0.097	1100	990	1430	**47.1** 103.6
22338	**190** 7.4803	**400** 15.7480	**132** 5.1969	**2380** 534000	**2830** 635000	EJ	**4** 0.2	**245** 9.6	**361** 14.2	0.32	2.12	3.15	2.07	0.102	1200	1100	1800	**80.0** 177.0
22338	**190** 7.4803	**400** 15.7480	**132** 5.1969	**2380** 534000	**2830** 635000	EMB	**4** 0.2	**245** 9.6	**361** 14.2	0.32	2.12	3.15	2.07	0.102	1200	1100	1610	**80.9** 178.0
23940	**200** 7.8740	**280** 11.0236	**60** 2.3622	**712** 160000	**1130** 254000	EM	**2** 0.08	**219** 8.6	**263** 10.3	0.19	3.65	5.43	3.57	0.101	1900	1600	2500	**11.0** 25.0
23040	**200** 7.8740	**310** 12.2047	**82** 3.2283	**1230** 276000	**1760** 395000	EJ	**2** 0.08	**225** 8.9	**289** 11.4	0.23	2.95	4.40	2.89	0.092	1800	1500	2380	**22.1** 48.6
23040	**200** 7.8740	**310** 12.2047	**82** 3.2283	**1230** 276000	**1760** 395000	EM	**2** 0.08	**225** 8.9	**289** 11.4	0.23	2.95	4.40	2.89	0.092	1800	1500	2390	**21.9** 48.1
24040	**200** 7.8740	**310** 12.2047	**109** 4.2913	**1560** 351000	**2460** 552000	EJ	**2** 0.08	**223** 8.8	**286** 11.2	0.31	2.16	3.22	2.12	0.096	1300	1100	2050	**30.0** 67.0

[1]Maximum shaft or housing fillet radius that bearing corners will clear.

[2]These factors apply for both inch and metric calculations. See engineering section for instructions on use.

[3]Geometry constant for Lubrication Life Factor a31 is found in the Bearing Ratings section of the Engineering Manual (order no. 10424).

[4]See thermal reference speed in the Engineering Manual (order no. 10424) and on page 61.

[5]See limiting speed on page 61.

Continued on next page.

SPHERICAL ROLLER BEARINGS – *continued*

- Shaft and housing fits, internal clearances, tolerances and other technical data for these bearings are found in the engineering section of this catalog and the Timken Engineering Manual (order no. 10424).
- Bearings are available with a tapered bore for adapter-type mounting. To order, add the suffix "K" to bearing number (e.g., 23120K).
- Consult your Timken sales engineer for up-to-date information about the availability of the bearings you have selected.

Continued from previous page.

Bearing Part Number	Bearing Dimensions			Load Ratings		Cage Type	Mounting Data			Equivalent Radial Load Factors[2]				Geometry Factor[3] C_g	Speed Reference			Weight
	Bore d	O.D. D	Width B	Dynamic C	Static C_o		Fillet[1] (Max.) R	Backing Diameter Shaft d_a	Backing Diameter Housing D_a	Dynamic e	Dynamic $\frac{F_a}{F_r} \le e$ X = 1 Y	Dynamic $\frac{F_a}{F_r} > e$ X = 0.67 Y	Static In All Cases Y_0		Thermal Reference Speed[4] Oil	Thermal Reference Speed[4] Grease	Limiting Speed[5]	
	mm in.	mm in.	mm in.	kN lbf.	kN lbf.		mm in.	mm in.	mm in.						RPM	RPM	RPM	kg lbs.
24040	**200** 7.8740	**310** 12.2047	**109** 4.2913	**1560** 351000	**2460** 552000	EM	**2** 0.08	**223** 8.8	**286** 11.2	0.31	2.16	3.22	2.12	0.096	1300	1100	1890	**30.0** 66.0
23140	**200** 7.8740	**340** 13.3858	**112** 4.4094	**1720** 386000	**2400** 540000	EJ	**2.5** 0.1	**230** 9.0	**308** 12.1	0.31	2.15	3.20	2.10	0.098	1300	1200	2010	**40.8** 89.9
23140	**200** 7.8740	**340** 13.3858	**112** 4.4094	**1660** 373000	**2290** 514000	EMB	**2.5** 0.1	**230** 9.0	**308** 12.1	0.31	2.15	3.20	2.10	0.097	1400	1200	1890	**40.7** 89.6
24140	**200** 7.8740	**340** 13.3858	**140** 5.5118	**2030** 456000	**2930** 658000	EJ	**2.5** 0.1	**226** 8.9	**308** 12.1	0.39	1.74	2.59	1.70	0.097	850	790	1440	**51.7** 113.7
24140	**200** 7.8740	**340** 13.3858	**140** 5.5118	**2030** 456000	**2930** 658000	EMB	**2.5** 0.1	**226** 8.9	**308** 12.1	0.39	1.74	2.59	1.70	0.097	850	790	1360	**52.1** 114.7
22240	**200** 7.8740	**360** 14.1732	**98** 3.8583	**1580** 356000	**2010** 452000	EJ	**3** 0.1	**236** 9.3	**323** 12.7	0.27	2.50	3.72	2.44	0.099	1700	1500	2480	**41.7** 91.8
22240	**200** 7.8740	**360** 14.1732	**98** 3.8583	**1580** 356000	**2010** 452000	EMB	**3** 0.1	**236** 9.3	**323** 12.7	0.27	2.50	3.72	2.44	0.099	1700	1500	2330	**42.6** 93.8
23240	**200** 7.8740	**360** 14.1732	**128** 5.0394	**2140** 480000	**2890** 650000	EMB	**3** 0.1	**237** 9.3	**329** 12.9	0.33	2.06	3.06	2.01	0.100	1000	920	1470	**56.5** 124.3
26340	**200** 7.8740	**380** 14.9606	**126** 4.9606	**1900** 427000	**2690** 605000	EMB	**4** 0.2	**240** 9.4	**336.7** 13.3	0.33	2.02	3.01	1.98	0.101	820	740	1250	**66.0** 145.2
23340	**200** 7.8740	**420** 16.5354	**165** 6.4961	**2940** 660000	**3730** 838000	EMB	**4** 0.2	**246** 9.7	**366** 14.4	0.41	1.66	2.47	1.62	0.104	720	670	1250	**112.6** 247.7
22340	**200** 7.8740	**420** 16.5354	**138** 5.4331	**2470** 556000	**2930** 658000	EJ	**4** 0.2	**246** 9.7	**369** 14.5	0.33	2.02	3.01	1.98	0.103	1200	1000	1750	**89.0** 195.8
22340	**200** 7.8740	**420** 16.5354	**138** 5.4331	**2470** 556000	**2930** 658000	EMB	**4** 0.2	**247** 9.7	**369** 14.5	0.33	2.02	3.01	1.98	0.103	1200	1000	1640	**93.0** 204.5
23944	**220** 8.6614	**300** 11.8110	**60** 2.3622	**739** 166000	**1210** 272000	EM	**2** 0.08	**239** 9.4	**283** 11.2	0.17	3.94	5.87	3.85	0.106	1700	1400	2280	**12.0** 26.4
23044	**220** 8.6614	**340** 13.3858	**90** 3.5433	**1340** 300000	**1970** 443000	EJ	**2.5** 0.1	**247** 9.7	**313** 12.3	0.24	2.77	4.13	2.71	0.101	1700	1400	2120	**28.7** 63.1
23044	**220** 8.6614	**340** 13.3858	**90** 3.5433	**1340** 300000	**1970** 443000	EM	**2.5** 0.1	**247** 9.7	**313** 12.3	0.24	2.77	4.13	2.71	0.101	1700	1400	2260	**28.8** 63.4
24044	**220** 8.6614	**340** 13.3858	**118** 4.6457	**1720** 388000	**2720** 612000	EJ	**2.5** 0.1	**245** 9.6	**313** 12.3	0.32	2.14	3.18	2.09	0.101	1200	1000	1830	**39.0** 86.0
24044	**220** 8.6614	**340** 13.3858	**118** 4.6457	**1720** 388000	**2720** 612000	EMB	**2.5** 0.1	**245** 9.6	**313** 12.3	0.32	2.14	3.18	2.09	0.101	1200	1000	1710	**39.3** 86.5
23144	**220** 8.6614	**370** 14.5669	**120** 4.7244	**1940** 436000	**2740** 616000	EJ	**3** 0.1	**252** 9.9	**336** 13.2	0.31	2.17	3.24	2.12	0.103	1200	1000	1810	**52.8** 116.2

[1]Maximum shaft or housing fillet radius that bearing corners will clear.
[2]These factors apply for both inch and metric calculations. See engineering section for instructions on use.
[3]Geometry constant for Lubrication Life Factor a31 is found in the Bearing Ratings section of the Engineering Manual (order no. 10424).
[4]See thermal reference speed in the Engineering Manual (order no. 10424) and on page 61.
[5]See limiting speed on page 61.

Continued on next page.

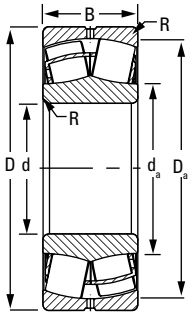

EJ

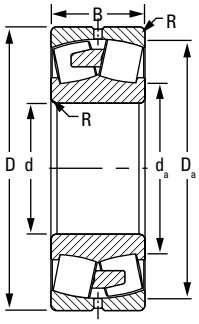

EM/YM

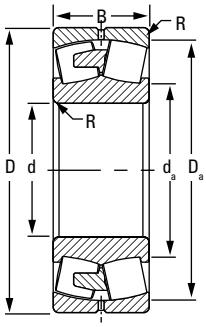

EMB/YMB

Continued from previous page.

Bearing Part Number	Bearing Dimensions			Load Ratings		Cage Type	Mounting Data			Equivalent Radial Load Factors[2]				Geometry Factor[3] C_g	Speed Reference			Weight
	Bore d	O.D. D	Width B	Dynamic C	Static C_o		Fillet[1] (Max.) R	Backing Diameter Shaft d_a	Backing Diameter Housing D_a	e	Dynamic $\frac{F_a}{F_r} \le e$ X = 1 Y	Dynamic $\frac{F_a}{F_r} > e$ X = 0.67 Y	Static In All Cases Y_0		Thermal Reference Speed[4] Oil	Thermal Reference Speed[4] Grease	Limiting Speed[5]	
	mm in.	mm in.	mm in.	kN lbf.	kN lbf.		mm in.	mm in.	mm in.						RPM	RPM	RPM	kg lbs.
23144	**220** 8.6614	**370** 14.5669	**120** 4.7244	**1940** 436000	**2740** 616000	EMB	**3** 0.1	**252** 9.9	**336** 13.2	0.31	2.17	3.24	2.12	0.103	1200	1000	1760	**52.8** 116.2
24144	**220** 8.6614	**370** 14.5669	**150** 5.9055	**2250** 505000	**3220** 725000	EJ	**3** 0.1	**248** 9.8	**337** 13.3	0.36	1.86	2.77	1.82	0.103	780	720	1310	**65.0** 144.0
24144	**220** 8.6614	**370** 14.5669	**150** 5.9055	**2250** 505000	**3220** 725000	EMB	**3** 0.1	**248** 9.8	**337** 13.3	0.36	1.86	2.77	1.82	0.103	780	720	1170	**65.0** 144.0
22244	**220** 8.6614	**400** 15.7480	**108** 4.2520	**1850** 415000	**2310** 520000	EJ	**3** 0.1	**261** 10.3	**359** 14.1	0.27	2.51	3.73	2.45	0.106	1500	1300	2220	**59.4** 130.7
22244	**220** 8.6614	**400** 15.7480	**108** 4.2520	**1850** 415000	**2310** 520000	EMB	**3** 0.1	**261** 10.3	**359** 14.1	0.27	2.51	3.73	2.45	0.106	1500	1300	2010	**59.4** 130.7
23244	**220** 8.6614	**400** 15.7480	**144** 5.6693	**2490** 559000	**3350** 754000	EJ	**3** 0.1	**257** 10.1	**359** 14.1	0.35	1.95	2.90	1.90	0.105	920	830	1730	**79.0** 174.0
23244	**220** 8.6614	**400** 15.7480	**144** 5.6693	**2490** 559000	**3350** 754000	EMB	**3** 0.1	**257** 10.1	**359** 14.1	0.35	1.95	2.90	1.90	0.105	920	830	1330	**79.4** 174.7
26344	**220** 8.6614	**420** 16.5354	**138** 5.4331	**2480** 558000	**3260** 733000	EMB	**4** 0.2	**265** 10.42	**372** 14.6	0.33	2.04	3.03	1.99	0.108	700	640	1110	**88.2** 194.0
22344	**220** 8.6614	**460** 18.1102	**145** 5.7087	**2740** 615000	**3240** 729000	EJ	**4** 0.2	**273** 10.7	**404** 15.9	0.32	2.08	3.10	2.04	0.110	1100	940	1600	**111.0** 244.2
22344	**220** 8.6614	**460** 18.1102	**145** 5.7087	**2740** 615000	**3240** 729000	EMB	**4** 0.2	**273** 10.7	**404** 15.9	0.32	2.08	3.10	2.04	0.110	1100	940	1610	**118.5** 260.7
23948	**240** 9.4488	**320** 12.5984	**60** 2.3622	**785** 176000	**1340** 300000	EM	**2** 0.08	**260** 10.2	**304** 12.0	0.16	4.16	6.20	4.07	0.104	1600	1300	2280	**12.9** 28.4
23048	**240** 9.4488	**360** 14.1732	**92** 3.6220	**1400** 315000	**2140** 480000	EJ	**2.5** 0.1	**267** 10.5	**334** 13.1	0.23	2.91	4.34	2.85	0.106	1500	1300	1980	**33.0** 72.0
23048	**240** 9.4488	**360** 14.1732	**92** 3.6220	**1400** 315000	**2140** 480000	EM	**2.5** 0.1	**267** 10.5	**334** 13.1	0.23	2.91	4.34	2.85	0.106	1500	1300	2120	**33.0** 72.0
24048	**240** 9.4488	**360** 14.1732	**118** 4.6457	**1790** 403000	**2900** 652000	EJ	**2.5** 0.1	**265** 10.4	**334** 13.1	0.29	2.31	3.44	2.26	0.106	1100	940	1720	**42.0** 92.0
24048	**240** 9.4488	**360** 14.1732	**118** 4.6457	**1790** 403000	**2900** 652000	EMB	**2.5** 0.1	**265** 10.4	**334** 13.1	0.29	2.31	3.44	2.26	0.106	1100	940	1520	**41.8** 92.0
23148	**240** 9.4488	**400** 15.7480	**128** 5.0394	**2280** 512000	**3330** 748000	EJ	**3** 0.1	**276** 10.9	**364** 14.3	0.30	2.28	3.40	2.23	0.111	1000	910	1680	**64.9** 142.8

[1]Maximum shaft or housing fillet radius that bearing corners will clear.

[2]These factors apply for both inch and metric calculations. See engineering section for instructions on use.

[3]Geometry constant for Lubrication Life Factor a31 is found in the Bearing Ratings section of the Engineering Manual (order no. 10424).

[4]See thermal reference speed in the Engineering Manual (order no. 10424) and on page 61.

[5]See limiting speed on page 61.

Continued on next page.

SPHERICAL ROLLER BEARINGS – *continued*

- Shaft and housing fits, internal clearances, tolerances and other technical data for these bearings are found in the engineering section of this catalog and the Timken Engineering Manual (order no. 10424).
- Bearings are available with a tapered bore for adapter-type mounting. To order, add the suffix "K" to bearing number (e.g., 23120K).
- Consult your Timken sales engineer for up-to-date information about the availability of the bearings you have selected.

Continued from previous page.

Bearing Part Number	Bearing Dimensions			Load Ratings		Cage Type	Mounting Data			Equivalent Radial Load Factors[2]				Geometry Factor[3] C_g	Speed Reference			Weight
	Bore d	O.D. D	Width B	Dynamic C	Static C_o		Fillet[1] (Max.) R	Backing Diameter Shaft d_a	Backing Diameter Housing D_a	Dynamic e	Dynamic $\frac{F_a}{F_r} \le e$ X = 1 Y	Dynamic $\frac{F_a}{F_r} > e$ X = 0.67 Y	Static In All Cases Y_0		Thermal Reference Speed[4] Oil	Thermal Reference Speed[4] Grease	Limiting Speed[5]	
	mm in.	mm in.	mm in.	kN lbf.	kN lbf.		mm in.	mm in.	mm in.						RPM	RPM	RPM	kg lbs.
23148	**240** 9.4488	**400** 15.7480	**128** 5.0394	**2200** 495000	**3180** 714000	EMB	**3** 0.1	**276** 10.9	**364** 14.3	0.30	2.28	3.40	2.23	0.110	1100	930	1460	**65.0** 142.0
24148	**240** 9.4488	**400** 15.7480	**160** 6.2992	**2690** 606000	**4050** 912000	EJ	**3** 0.1	**270** 10.7	**364** 14.3	0.37	1.80	2.68	1.76	0.109	650	610	1200	**80.5** 177.1
24148	**240** 9.4488	**400** 15.7480	**160** 6.2992	**2690** 606000	**4050** 912000	EMB	**3** 0.1	**270** 10.7	**364** 14.3	0.37	1.80	2.68	1.76	0.109	650	610	1080	**80.5** 177.1
22248	**240** 9.4488	**440** 17.3228	**120** 4.7244	**2330** 524000	**2950** 663000	EJ	**3** 0.1	**283** 11.1	**395** 15.6	0.27	2.46	3.67	2.41	0.112	1300	1100	2050	**77.0** 169.5
22248	**240** 9.4488	**440** 17.3228	**120** 4.7244	**2330** 524000	**2950** 663000	EMB	**3** 0.1	**284** 11.2	**395** 15.6	0.27	2.46	3.67	2.41	0.112	1300	1100	1760	**81.0** 178.2
23248	**240** 9.4488	**440** 17.3228	**160** 6.2992	**3050** 685000	**4160** 935000	EJ	**3** 0.1	**280** 11.0	**394** 15.5	0.35	1.92	2.86	1.88	0.112	790	720	1600	**104.8** 230.4
23248	**240** 9.4488	**440** 17.3228	**160** 6.2992	**3050** 685000	**4160** 935000	EMB	**3** 0.1	**281** 11.1	**394** 15.5	0.35	1.92	2.86	1.88	0.112	790	720	1160	**108.0** 237.5
26348	**240** 9.4488	**460** 18.1102	**147** 5.7874	**2910** 653000	**3690** 829000	EMB	**4** 0.2	**286** 11.3	**410** 16.1	0.32	2.08	3.10	2.04	0.113	690	580	970	**113.0** 248.6
22348	**240** 9.4488	**500** 19.6850	**155** 6.1024	**3270** 734000	**3960** 890000	EMB	**4** 0.2	**297** 11.7	**439** 17.3	0.32	2.10	3.13	2.05	0.117	910	820	1480	**149.2** 328.2
26250	**250** 9.8425	**410** 16.1417	**128** 5.0394	**2190** 492000	**3150** 709000	EM	**3** 0.1	**284.5** 11.2	**374** 14.7	0.30	2.28	3.39	2.23	0.111	680	620	1230	**64.0** 140.8
23952	**260** 10.2362	**360** 14.1732	**75** 2.9528	**1120** 251000	**1860** 419000	EM	**2** 0.08	**284** 11.2	**339** 13.3	0.18	3.74	5.56	3.65	0.110	1400	1200	1990	**22.8** 50.2
23052	**260** 10.2362	**400** 15.7480	**104** 4.0945	**1820** 409000	**2740** 617000	EJ	**3** 0.12	**291** 11.5	**369** 14.5	0.24	2.85	4.24	2.78	0.113	1300	1100	1830	**47.5** 104.5
23052	**260** 10.2362	**400** 15.7480	**104** 4.0945	**1820** 409000	**2740** 617000	EMB	**3** 0.1	**291** 11.5	**369** 14.5	0.24	2.85	4.24	2.78	0.113	1300	1100	1620	**47.6** 104.7
24052	**260** 10.2362	**400** 15.7480	**140** 5.5118	**2380** 535000	**3840** 864000	EJ	**3** 0.1	**288** 11.3	**369** 14.5	0.32	2.12	3.15	2.07	0.113	930	820	1580	**63.9** 140.6
24052	**260** 10.2362	**400** 15.7480	**140** 5.5118	**2380** 535000	**3840** 864000	EMB	**3** 0.1	**288** 11.3	**369** 14.5	0.32	2.12	3.15	2.07	0.113	940	830	1360	**63.9** 140.6
23152	**260** 10.236	**440** 17.3228	**144** 5.6693	**2680** 603000	**3930** 885000	EJ	**3** 0.1	**301** 11.8	**400** 15.7	0.30	2.23	3.31	2.18	0.116	930	830	1550	**87.7** 193.0
23152	**260** 10.2362	**440** 17.3228	**144** 5.6693	**2680** 603000	**3930** 885000	EMB	**3** 0.1	**302** 11.9	**400** 15.7	0.30	2.23	3.31	2.18	0.116	930	830	1240	**90.0** 199.0
24152	**260** 10.2362	**440** 17.3228	**180** 7.0866	**3160** 710000	**4800** 1080000	EJ	**3** 0.1	**294** 11.6	**398** 15.7	0.37	1.82	2.70	1.78	0.115	580	540	1090	**112.0** 246.0

[1]Maximum shaft or housing fillet radius that bearing corners will clear.
[2]These factors apply for both inch and metric calculations. See engineering section for instructions on use.
[3]Geometry constant for Lubrication Life Factor a31 is found in the Bearing Ratings section of the Engineering Manual (order no. 10424).
[4]See thermal reference speed in the Engineering Manual (order no. 10424) and on page 61.
[5]See limiting speed on page 61.

Continued on next page.

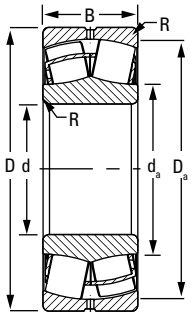

EJ

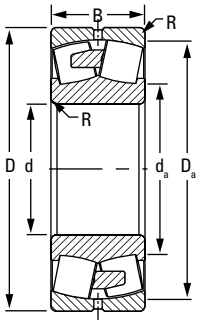

EM/YM

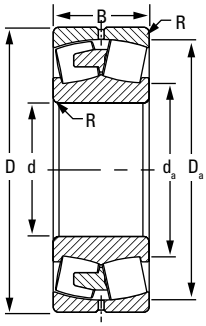

EMB/YMB

Continued from previous page.

Bearing Part Number	Bearing Dimensions			Load Ratings		Cage Type	Mounting Data			Equivalent Radial Load Factors[2]				Geometry Factor[3] C_g	Speed Reference			Weight
	Bore d	O.D. D	Width B	Dynamic C	Static C_o		Fillet[1] (Max.) R	Backing Diameter Shaft d_a	Backing Diameter Housing D_a	e	Dynamic $\frac{F_a}{F_r} \le e$ X = 1 Y	Dynamic $\frac{F_a}{F_r} > e$ X = 0.67 Y	Static In All Cases Y_0		Thermal Reference Speed[4] Oil	Thermal Reference Speed[4] Grease	Limiting Speed[5]	
	mm in.	mm in.	mm in.	kN lbf.	kN lbf.		mm in.	mm in.	mm in.						RPM	RPM	RPM	kg lbs.
24152	**260** 10.2362	**440** 17.3228	**180** 7.0866	**3160** 710000	**4800** 1080000	EMB	**3** 0.1	**296** 11.7	**398** 15.7	0.37	1.82	2.70	1.78	0.115	580	540	960	**111.4** 245.1
22252	**260** 10.2362	**480** 18.8976	**130** 5.1181	**2740** 616000	**3500** 787000	EMB	**4** 0.2	**309** 12.2	**430** 16.9	0.27	2.46	3.66	2.41	0.118	1200	1000	1600	**105.5** 232.1
23252	**260** 10.2362	**480** 18.8976	**174** 6.8504	**3510** 790000	**4850** 1090000	EJ	**4** 0.2	**307** 12.1	**430** 16.9	0.34	1.98	2.95	1.94	0.119	710	650	1470	**135.8** 298.8
23252	**260** 10.2362	**480** 18.8976	**174** 6.8504	**3510** 790000	**4850** 1090000	EMB	**4** 0.2	**308** 12.1	**430** 16.9	0.34	1.98	2.95	1.94	0.119	710	650	1000	**140.0** 308.0
22352	**260** 10.2362	**540** 21.2598	**165** 6.4961	**3730** 838000	**4550** 1020000	EMB	**5** 0.2	**321** 12.6	**475** 18.7	0.32	2.13	3.17	2.08	0.123	810	730	1340	**184.5** 405.9
23352	**260** 10.2362	**540** 21.2598	**206** 8.1102	**4600** 1030000	**5990** 1350000	EM	**5** 0.2	**318** 12.5	**473** 18.6	0.39	1.71	2.54	1.67	0.123	490	460	1270	**227.0** 499.4
23956	**280** 11.0236	**380** 14.9606	**75** 2.9528	**1170** 264000	**1990** 446000	EMB	**2** 0.08	**304** 12.0	**360** 14.2	0.17	3.95	5.88	3.86	0.115	1300	1100	1690	**24.3** 53.5
23056	**280** 11.0236	**420** 16.5354	**106** 4.1732	**1820** 410000	**2810** 631000	EJ	**3** 0.1	**309** 12.2	**389** 15.3	0.23	2.92	4.35	2.86	0.118	1300	1100	1690	**48.8** 107.3
23056	**280** 11.0236	**420** 16.5354	**106** 4.1732	**1820** 410000	**2810** 631000	EMB	**3** 0.1	**312** 12.3	**389** 15.3	0.23	2.92	4.35	2.86	0.118	1300	1100	1600	**51.0** 112.2
24056	**280** 11.0236	**420** 16.5354	**140** 5.5118	**2420** 544000	**4090** 921000	EJ	**3** 0.1	**307** 12.1	**388** 15.3	0.30	2.25	3.35	2.20	0.117	860	760	1310	**68.0** 149.0
24056	**280** 11.0236	**420** 16.5354	**140** 5.5118	**2420** 544000	**4090** 921000	EMB	**3** 0.1	**310** 12.2	**388** 15.3	0.30	2.25	3.35	2.20	0.117	860	760	1290	**68.0** 149.6
23156	**280** 11.0236	**460** 18.1102	**146** 5.7480	**2780** 626000	**4170** 937000	EJ	**4** 0.2	**318** 12.5	**419** 16.5	0.30	2.26	3.36	2.21	0.121	870	770	1480	**93.3** 205.2
23156	**280** 11.0236	**460** 18.1102	**146** 5.7480	**2780** 626000	**4170** 937000	EMB	**4** 0.2	**320** 12.6	**419** 16.5	0.30	2.26	3.36	2.21	0.121	870	770	1320	**96.8** 213.0
24156	**280** 11.0236	**460** 18.1102	**180** 7.0866	**3210** 723000	**5060** 1140000	EJ	**4** 0.2	**316** 12.5	**419** 16.5	0.36	1.86	2.77	1.82	0.121	540	510	1010	**118.0** 260.0
24156	**280** 11.0236	**460** 18.1102	**180** 7.0866	**3210** 723000	**5060** 1140000	EMB	**4** 0.2	**319** 12.6	**419** 16.5	0.36	1.86	2.77	1.82	0.121	540	510	910	**118.0** 259.6
22256	**280** 11.0236	**500** 19.6850	**130** 5.1181	**2800** 630000	**3750** 844000	EMB	**4** 0.2	**331** 13.0	**449** 17.7	0.26	2.62	3.91	2.57	0.123	1100	940	1570	**112.1** 246.6

[1]Maximum shaft or housing fillet radius that bearing corners will clear.

[2]These factors apply for both inch and metric calculations. See engineering section for instructions on use.

[3]Geometry constant for Lubrication Life Factor a31 is found in the Bearing Ratings section of the Engineering Manual (order no. 10424).

[4]See thermal reference speed in the Engineering Manual (order no. 10424) and on page 61.

[5]See limiting speed on page 61.

Continued on next page.

SPHERICAL ROLLER BEARINGS – *continued*

- Shaft and housing fits, internal clearances, tolerances and other technical data for these bearings are found in the engineering section of this catalog and the Timken Engineering Manual (order no. 10424).
- Bearings are available with a tapered bore for adapter-type mounting. To order, add the suffix "K" to bearing number (e.g., 23120K).
- Consult your Timken sales engineer for up-to-date information about the availability of the bearings you have selected.

Continued from previous page.

Bearing Part Number	Bearing Dimensions			Load Ratings		Cage Type	Mounting Data			Equivalent Radial Load Factors[2]				Geometry Factor[3] C_g	Speed Reference			Weight
	Bore d	O.D. D	Width B	Dynamic C	Static C_o		Fillet[1] (Max.) R	Backing Diameter Shaft d_a	Backing Diameter Housing D_a	Dynamic e	Dynamic $\frac{F_a}{F_r} \le e$ X = 1 Y	Dynamic $\frac{F_a}{F_r} > e$ X = 0.67 Y	Static In All Cases Y_0		Thermal Reference Speed[4] Oil	Thermal Reference Speed[4] Grease	Limiting Speed[5]	
	mm in.	mm in.	mm in.	kN lbf.	kN lbf.		mm in.	mm in.	mm in.						RPM	RPM	RPM	kg lbs.
23256	**280** 11.0236	**500** 19.6850	**176** 6.9291	**3680** 828000	**5250** 1180000	EJ	**4** 0.2	**327** 12.9	**450** 17.7	0.33	2.07	3.08	2.02	0.123	650	590	1400	**149.0** 328.0
23256	**280** 11.0236	**500** 19.6850	**176** 6.9291	**3680** 828000	**5250** 1180000	EMB	**4** 0.2	**329** 13.0	**450** 17.7	0.33	2.07	3.08	2.02	0.123	650	590	940	**149.6** 329.1
22356	**280** 11.0236	**580** 22.8346	**175** 6.8898	**4280** 962000	**5280** 1190000	EMB	**5** 0.2	**345** 13.6	**511** 20.1	0.32	2.13	3.17	2.08	0.129	720	660	1210	**226.3** 497.9
23356	**280** 11.0236	**580** 22.8346	**224** 8.8189	**5340** 1200000	**7050** 1580000	EMB	**5** 0.2	**341** 13.4	**508** 20.0	0.40	1.69	2.52	1.65	0.128	440	410	800	**284.0** 624.8
23960	**300** 11.8110	**420** 16.5354	**90** 3.5433	**1570** 352000	**2630** 592000	EMB	**2.5** 0.1	**328** 12.9	**394** 15.5	0.19	3.59	5.34	3.51	0.121	1200	970	1530	**38.4** 84.5
23060	**300** 11.8110	**460** 18.1102	**118** 4.6457	**2330** 525000	**3570** 803000	EJ	**3** 0.1	**334** 13.1	**425** 16.8	0.24	2.87	4.27	2.80	0.123	1100	940	1550	**68.2** 150.0
23060	**300** 11.8110	**460** 18.1102	**118** 4.6457	**2330** 525000	**3570** 803000	EMB	**3** 0.1	**336** 13.2	**425** 16.8	0.24	2.87	4.27	2.80	0.123	1100	940	1410	**71.2** 156.5
24060	**300** 11.8110	**460** 18.1102	**160** 6.2992	**3070** 689000	**5190** 1170000	EJ	**3** 0.1	**331** 13.0	**423** 16.7	0.32	2.11	3.13	2.06	0.123	750	670	1210	**96.0** 211.0
24060	**300** 11.8110	**460** 18.1102	**160** 6.2992	**3070** 689000	**5190** 1170000	EMB	**3** 0.1	**334** 13.1	**423** 16.7	0.32	2.11	3.13	2.06	0.123	750	670	1210	**97.4** 214.3
23160	**300** 11.8110	**500** 19.6850	**160** 6.2992	**3370** 757000	**5120** 1150000	EJ	**4** 0.2	**343** 13.5	**453** 17.8	0.30	2.25	3.35	2.20	0.127	760	680	1380	**124.9** 274.8
23160	**300** 11.8110	**500** 19.6850	**160** 6.2992	**3370** 757000	**5120** 1150000	EMB	**4** 0.2	**345** 13.6	**453** 17.8	0.30	2.25	3.35	2.20	0.127	760	680	1180	**128.7** 283.1
24160	**300** 11.8110	**500** 19.6850	**200** 7.8740	**4060** 913000	**6270** 1410000	EJ	**4** 0.2	**336** 13.2	**455** 17.9	0.37	1.82	2.71	1.78	0.125	470	440	930	**158.0** 347,0
24160	**300** 11.8110	**500** 19.6850	**200** 7.8740	**4060** 913000	**6270** 1410000	EMB	**4** 0.2	**338** 13.3	**455** 17.9	0.37	1.82	2.71	1.78	0.125	470	440	810	**157.1** 345.6
22260	**300** 11.8110	**540** 21.2598	**140** 5.5118	**3290** 740000	**4400** 989000	EMB	**4** 0.2	**355** 14.0	**484** 19.1	0.26	2.59	3.86	2.53	0.128	980	850	1410	**142.0** 312.4
23260	**300** 11.8110	**540** 21.2598	**192** 7.5591	**4210** 946000	**6170** 1390000	EJ	**4** 0.2	**351** 13.8	**482** 19.0	0.34	2.00	2.98	1.96	0.130	580	530	1310	**191.0** 420.0
23260	**300** 11.8110	**540** 21.2598	**192** 7.5591	**4210** 946000	**6170** 1390000	EMB	**4** 0.2	**353** 13.9	**482** 19.0	0.34	2.00	2.98	1.96	0.130	580	530	1020	**194.5** 427.9
23964	**320** 12.5984	**440** 17.3228	**90** 3.5433	**1600** 359000	**2780** 625000	EMB	**2.5** 0.1	**349** 13.8	**414** 16.3	0.18	3.79	5.65	3.71	0.126	1100	900	1450	**40.6** 89.3
23064	**320** 12.5984	**480** 18.8976	**121** 4.7638	**2410** 543000	**3880** 873000	EJ	**3** 0.1	**355** 14.0	**444** 17.5	0.23	2.93	4.36	2.86	0.128	1000	880	1470	**74.2** 163.2

[1]Maximum shaft or housing fillet radius that bearing corners will clear.
[2]These factors apply for both inch and metric calculations. See engineering section for instructions on use.
[3]Geometry constant for Lubrication Life Factor a31 is found in the Bearing Ratings section of the Engineering Manual (order no. 10424).
[4]See thermal reference speed in the Engineering Manual (order no. 10424) and on page 61.
[5]See limiting speed on page 61.

Continued on next page.

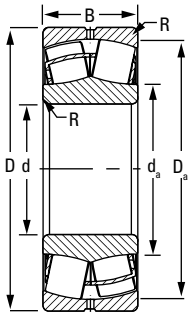

EJ

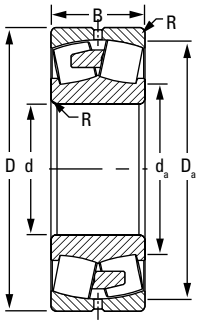

EM/YM

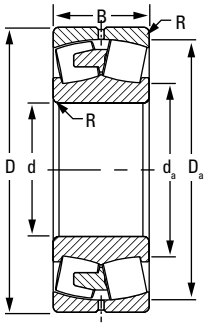

EMB/YMB

Continued from previous page.

Bearing Part Number	Bearing Dimensions			Load Ratings		Cage Type	Mounting Data			Equivalent Radial Load Factors[2]				Geometry Factor[3] C_g	Speed Reference			Weight
	Bore d	O.D. D	Width B	Dynamic C	Static C_o		Fillet[1] (Max.) R	Backing Diameter Shaft d_a	Backing Diameter Housing D_a	e	Dynamic $\frac{F_a}{F_r} \le e$ X = 1 Y	Dynamic $\frac{F_a}{F_r} > e$ X = 0.67 Y	Static In All Cases Y_0		Thermal Reference Speed[4] Oil	Thermal Reference Speed[4] Grease	Limiting Speed[5]	
	mm in.	mm in.	mm in.	kN lbf.	kN lbf.		mm in.	mm in.	mm in.						RPM	RPM	RPM	kg lbs.
23064	**320** 12.5984	**480** 18.8976	**121** 4.7638	**2410** 543000	**3880** 873000	EMB	**3** 0.1	**357** 14.1	**444** 17.5	0.23	2.93	4.36	2.86	0.128	1000	880	1370	**77.4** 170.2
24064	**320** 12.5984	**480** 18.8976	**160** 6.2992	**3130** 703000	**5380** 1210000	EJ	**3** 0.1	**351** 13.8	**444** 17.5	0.30	2.24	3.34	2.19	0.128	710	630	1150	**101.0** 222.0
24064	**320** 12.5984	**480** 18.8976	**160** 6.2992	**3130** 703000	**5380** 1210000	EMB	**3** 0.1	**354** 13.9	**444** 17.5	0.30	2.24	3.34	2.19	0.128	710	630	1130	**102.0** 224.4
23164	**320** 12.5984	**540** 21.2598	**176** 6.9291	**3990** 898000	**5950** 1340000	EJ	**4** 0.2	**364** 14.3	**490** 19.3	0.31	2.14	3.19	2.10	0.131	690	620	1260	**160.5** 353.0
23164	**320** 12.5984	**540** 21.2598	**176** 6.9291	**3990** 898000	**5950** 1340000	EMB	**4** 0.2	**367** 14.4	**490** 19.3	0.31	2.14	3.19	2.10	0.131	690	620	1100	**167.1** 367.5
24164	**320** 12.5984	**540** 21.2598	**218** 8.5827	**4790** 1080000	**7530** 1690000	EJ	**4** 0.2	**360** 14.2	**489** 19.3	0.38	1.77	2.63	1.73	0.131	410	390	860	**203.0** 448.0
24164	**320** 12.5984	**540** 21.2598	**218** 8.5827	**4790** 1080000	**7530** 1690000	EMB	**4** 0.2	**362** 14.3	**489** 19.3	0.38	1.77	2.63	1.73	0.131	410	390	720	**204.6** 450.1
22264	**320** 12.5984	**580** 22.8346	**150** 5.9055	**3720** 835000	**5000** 1120000	EMB	**4** 0.2	**380** 15.0	**519** 20.4	0.26	2.58	3.84	2.52	0.134	900	780	1290	**177.1** 389.6
23264	**320** 12.5984	**580** 22.8346	**208** 8.1890	**4770** 1070000	**7090** 1590000	EJ	**4** 0.2	**377** 14.8	**516** 20.3	0.34	1.98	2.94	1.93	0.135	530	490	1220	**240.0** 528.0
23264	**320** 12.5984	**580** 22.8346	**208** 8.1890	**4770** 1070000	**7090** 1590000	EMB	**4** 0.2	**379** 14.9	**516** 20.3	0.34	1.98	2.94	1.93	0.135	530	490	940	**245.1** 539.2
23968	**340** 13.3858	**460** 18.1102	**90** 3.5433	**1670** 376000	**2990** 673000	EMB	**2.5** 0.1	**369** 14.5	**435** 17.1	0.17	3.98	5.93	3.89	0.131	990	830	1390	**43.0** 94.6
23068	**340** 13.3858	**520** 20.4724	**133** 5.2362	**2890** 650000	**4630** 1040000	EJ	**4** 0.2	**381** 15.0	**481** 18.9	0.23	2.96	4.40	2.89	0.135	930	800	1350	**101.0** 223.0
23068	**340** 13.3858	**520** 20.4724	**133** 5.2362	**2890** 650000	**4630** 1040000	EMB	**4** 0.2	**384** 15.1	**481** 18.9	0.23	2.96	4.40	2.89	0.135	930	800	1150	**102.7** 225.9
24068	**340** 13.3858	**520** 20.4724	**180** 7.0866	**3820** 859000	**6540** 1470000	EJ	**4** 0.2	**375** 14.7	**479** 18.9	0.32	2.14	3.18	2.09	0.134	640	570	1070	**137.0** 302.0
24068	**340** 13.3858	**520** 20.4724	**180** 7.0866	**3820** 859000	**6540** 1470000	EMB	**4** 0.2	**377** 14.9	**479** 18.9	0.32	2.14	3.18	2.09	0.134	640	570	1030	**139.0** 305.8
23168	**340** 13.3858	**580** 22.8346	**190** 7.4803	**4500** 1010000	**6850** 1540000	EJ	**4** 0.2	**395** 15.5	**526** 20.7	0.30	2.22	3.30	2.17	0.138	630	570	1170	**206.0** 455.0

[1]Maximum shaft or housing fillet radius that bearing corners will clear.

[2]These factors apply for both inch and metric calculations. See engineering section for instructions on use.

[3]Geometry constant for Lubrication Life Factor a31 is found in the Bearing Ratings section of the Engineering Manual (order no. 10424).

[4]See thermal reference speed in the Engineering Manual (order no. 10424) and on page 61.

[5]See limiting speed on page 61.

Continued on next page.

SPHERICAL ROLLER BEARINGS – *continued*

- Shaft and housing fits, internal clearances, tolerances and other technical data for these bearings are found in the engineering section of this catalog and the Timken Engineering Manual (order no. 10424).
- Bearings are available with a tapered bore for adapter-type mounting. To order, add the suffix "K" to bearing number (e.g., 23120K).
- Consult your Timken sales engineer for up-to-date information about the availability of the bearings you have selected.

Continued from previous page.

Bearing Part Number	Bearing Dimensions			Load Ratings		Cage Type	Mounting Data			Equivalent Radial Load Factors[2]				Geometry Factor[3] C_g	Speed Reference			Weight
	Bore d	O.D. D	Width B	Dynamic C	Static C_o		Fillet[1] (Max.) R	Backing Diameter Shaft d_a	Backing Diameter Housing D_a	Dynamic e	Dynamic $\frac{F_a}{F_r} \le e$ X = 1 Y	Dynamic $\frac{F_a}{F_r} > e$ X = 0.67 Y	Static In All Cases Y_0		Thermal Reference Speed[4] Oil	Thermal Reference Speed[4] Grease	Limiting Speed[5]	
	mm in.	mm in.	mm in.	kN lbf.	kN lbf.		mm in.	mm in.	mm in.						RPM	RPM	RPM	kg lbs.
23168	**340** 13.3858	**580** 22.8346	**190** 7.4803	**4500** 1010000	**6850** 1540000	EMB	**4** 0.2	**397** 15.6	**526** 20.7	0.30	2.22	3.30	2.17	0.138	630	570	940	**210.3** 462.7
24168	**340** 13.3858	**580** 22.8346	**243** 9.5669	**5680** 1280000	**8900** 2000000	EMB	**4** 0.2	**385** 15.2	**525** 20.7	0.39	1.75	2.61	1.71	0.137	370	350	660	**266.0** 585.2
23268	**340** 13.3858	**620** 24.4094	**224** 8.8189	**5160** 1160000	**8200** 1840000	YMB	**5** 0.2	**399** 15.7	**554** 21.8	0.35	1.91	2.84	1.86	0.086	470	440	870	**292.4** 643.4
23972	**360** 14.1732	**480** 18.8976	**90** 3.5433	**1710** 385000	**3140** 707000	EMB	**2.5** 0.1	**389** 15.3	**455** 17.9	0.16	4.12	6.13	4.03	0.135	920	780	1310	**45.0** 99.0
23072	**360** 14.1732	**540** 21.2598	**134** 5.2756	**2840** 638000	**4610** 1040000	EJ	**4** 0.2	**400** 15.7	**499** 19.7	0.23	2.94	4.38	2.88	0.139	900	770	1290	**107.0** 236.0
23072	**360** 14.1732	**540** 21.2598	**134** 5.2756	**2840** 638000	**4610** 1040000	EMB	**4** 0.2	**403** 15.9	**499** 19.7	0.23	2.94	4.38	2.88	0.139	900	770	1200	**108.3** 238.3
24072	**360** 14.1732	**540** 21.2598	**180** 7.0866	**3920** 881000	**6850** 1540000	EJ	**4** 0.2	**395** 15.6	**500** 19.7	0.30	2.24	3.33	2.19	0.138	600	540	1030	**144.0** 316.0
24072	**360** 14.1732	**540** 21.2598	**180** 7.0866	**3920** 881000	**6850** 1540000	EMB	**4** 0.2	**398** 15.7	**500** 19.7	0.30	2.24	3.33	2.19	0.138	600	540	960	**145.4** 319.9
23172	**360** 14.1732	**600** 23.6220	**192** 7.5591	**4660** 1050000	**7300** 1640000	EJ	**4** 0.2	**416** 16.4	**546** 21.5	0.29	2.29	3.42	2.24	0.143	590	530	1120	**218.0** 480.0
23172	**360** 14.1732	**600** 23.6220	**192** 7.5591	**4660** 1050000	**7300** 1640000	EMB	**4** 0.2	**419** 16.5	**546** 21.5	0.29	2.29	3.42	2.24	0.143	590	530	900	**222.1** 488.6
24172	**360** 14.1732	**600** 23.6220	**243** 9.5669	**5900** 1330000	**9550** 2150000	EMB	**4** 0.2	**406** 16.0	**545** 21.4	0.38	1.79	2.67	1.75	0.142	340	320	630	**279.5** 614.9
22272	**360** 14.1732	**650** 25.5906	**170** 6.6929	**4210** 946000	**6280** 1410000	YMB	**5** 0.2	**427** 16.8	**583** 23.0	0.25	2.66	3.95	2.60	0.089	770	680	1170	**245.0** 539.0
23272	**360** 14.1732	**650** 25.5906	**232** 9.1339	**5530** 1240000	**8790** 1980000	YMB	**5** 0.2	**420** 16.5	**583** 23.0	0.35	1.95	2.91	1.91	0.089	450	410	990	**338.6** 744.9
23976	**380** 14.9606	**520** 20.4724	**106** 4.1732	**2130** 479000	**3940** 886000	EMB	**3** 0.1	**416** 16.4	**488** 19.2	0.18	3.80	5.66	3.72	0.141	860	720	1180	**67.1** 147.6
23076	**380** 14.9606	**560** 22.0472	**135** 5.3150	**3070** 690000	**5110** 1150000	EJ	**4** 0.2	**420** 16.5	**520** 20.5	0.22	3.08	4.58	3.01	0.142	830	710	1240	**112.0** 248.0
23076	**380** 14.9606	**560** 22.0472	**135** 5.3150	**3070** 690000	**5110** 1150000	EMB	**4** 0.2	**422** 16.6	**520** 20.5	0.22	3.08	4.58	3.01	0.142	830	710	880	**114.2** 251.2
24076	**380** 14.9606	**560** 22.0472	**180** 7.0866	**4030** 905000	**7090** 1590000	EMB	**4** 0.2	**418** 16.4	**520** 20.5	0.29	2.32	3.45	2.27	0.141	570	510	870	**151.2** 332.6
23176	**380** 14.9606	**620** 24.4094	**194** 7.6378	**4490** 1010000	**7580** 1700000	YMB	**4** 0.2	**431** 17.0	**566** 22.3	0.30	2.28	3.39	2.23	0.090	560	510	1140	**232.6** 511.7

[1]Maximum shaft or housing fillet radius that bearing corners will clear.
[2]These factors apply for both inch and metric calculations. See engineering section for instructions on use.
[3]Geometry constant for Lubrication Life Factor a31 is found in the Bearing Ratings section of the Engineering Manual (order no. 10424).
[4]See thermal reference speed in the Engineering Manual (order no. 10424) and on page 61.
[5]See limiting speed on page 61.

Continued on next page.

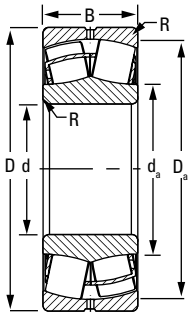

EJ

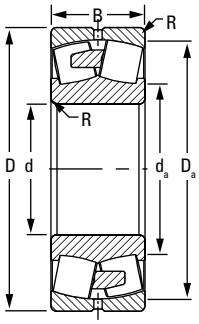

EM/YM

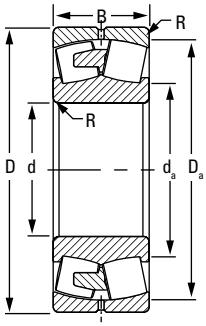

EMB/YMB

Continued from previous page.

Bearing Part Number	Bearing Dimensions			Load Ratings		Cage Type	Mounting Data			Equivalent Radial Load Factors[2]				Geometry Factor[3] C_g	Speed Reference			Weight
	Bore d	O.D. D	Width B	Dynamic C	Static C_o		Fillet[1] (Max.) R	Backing Diameter Shaft d_a	Backing Diameter Housing D_a	e	Dynamic $\frac{F_a}{F_r} \le e$ X = 1 Y	Dynamic $\frac{F_a}{F_r} > e$ X = 0.67 Y	Static In All Cases Y_0		Thermal Reference Speed[4] Oil	Thermal Reference Speed[4] Grease	Limiting Speed[5]	
	mm in.	mm in.	mm in.	kN lbf.	kN lbf.		mm in.	mm in.	mm in.						RPM	RPM	RPM	kg lbs.
24176	**380** 14.9606	**620** 24.4094	**243** 9.5669	**5580** 1250000	**10100** 2260000	YMB	**4** 0.2	**427** 16.8	**565** 22.3	0.36	1.87	2.79	1.83	0.090	320	300	630	**291.0** 640.2
22276	**380** 14.9606	**680** 26.7716	**175** 6.8898	**4540** 1020000	**6780** 1520000	YMB	**5** 0.2	**449** 17.7	**611** 24.1	0.25	2.71	4.03	2.65	0.092	720	640	1110	**274.0** 604.0
23276	**380** 14.9606	**680** 26.7716	**240** 9.4488	**5970** 1340000	**9520** 2140000	YMB	**5** 0.2	**442** 17.4	**611** 24.1	0.34	1.98	2.95	1.94	0.092	420	390	920	**379.4** 834.7
23980	**400** 15.7480	**540** 21.2598	**106** 4.1732	**2180** 489000	**4020** 903000	EMB	**3** 0.1	**436** 17.2	**511** 20.1	0.17	3.99	5.94	3.90	0.146	810	690	1100	**69.2** 152.2
23080	**400** 15.7480	**600** 23.6220	**148** 5.8268	**3630** 815000	**5980** 1340000	EJ	**4** 0.2	**444** 17.5	**555** 21.9	0.23	2.98	4.44	2.92	0.147	760	660	1160	**146.0** 321.0
23080	**400** 15.7480	**600** 23.6220	**148** 5.8268	**3630** 815000	**5980** 1340000	EMB	**4** 0.2	**447** 17.6	**555** 21.9	0.23	2.98	4.44	2.92	0.147	760	660	1230	**148.7** 327.1
24080	**400** 15.7480	**600** 23.6220	**200** 7.8740	**4790** 1080000	**8480** 1910000	EMB	**4** 0.2	**442** 17.4	**555** 21.9	0.30	2.24	3.33	2.19	0.147	510	460	1010	**200.0** 440.0
23180	**400** 15.7480	**650** 25.5906	**200** 7.8740	**4770** 1070000	**8110** 1820000	YMB	**5** 0.2	**454** 17.9	**594** 23.4	0.29	2.32	3.46	2.27	0.092	530	480	1060	**261.6** 575.5
24180	**400** 15.7480	**650** 25.5906	**250** 9.8425	**5810** 1310000	**10400** 2330000	YMB	**5** 0.2	**449** 17.7	**594** 23.4	0.35	1.91	2.84	1.87	0.092	310	290	570	**322.3** 709.1
22280	**400** 15.7480	**720** 28.3465	**185** 7.2835	**5040** 1130000	**7590** 1710000	YMB	**5** 0.2	**474** 18.7	**646** 25.4	0.25	2.70	4.03	2.64	0.095	670	590	1040	**326.0** 719.0
23280	**400** 15.7480	**720** 28.3465	**256** 10.0787	**6720** 1510000	**10800** 2430000	YMB	**5** 0.2	**466** 18.4	**646** 25.4	0.34	1.96	2.93	1.92	0.095	380	350	850	**457.5** 1006.5
22380	**400** 15.7480	**820** 32.2835	**243** 9.5669	**7220** 1620000	**10100** 2280000	YMB	**6** 0.2	**496** 19.5	**729** 28.7	0.30	2.28	3.40	2.23	0.099	440	410	930	**618.7** 1361.1
23984	**420** 16.5354	**560** 22.0472	**106** 4.1732	**2270** 511000	**4240** 953000	EMB	**3** 0.1	**454** 17.9	**531** 20.9	0.16	4.14	6.17	4.05	0.149	770	650	1090	**71.9** 158.2
23084	**420** 16.5354	**620** 24.4094	**150** 5.9055	**3450** 774000	**6360** 1430000	YMB	**4** 0.2	**467** 18.4	**576** 22.7	0.22	3.05	4.54	2.98	0.094	720	620	1230	**156.0** 343.2
24084	**420** 16.5354	**620** 24.4094	**200** 7.8740	**4390** 987000	**8630** 1940000	YMB	**4** 0.2	**463** 18.2	**575** 22.7	0.29	2.37	3.52	2.31	0.093	490	440	1010	**206.7** 454.7
23184	**420** 16.5354	**700** 27.5591	**224** 8.8189	**5720** 1290000	**9640** 2170000	YMB	**5** 0.2	**480** 18.9	**636** 25.1	0.31	2.21	3.20	2.16	0.096	480	440	970	**350.8** 771.8

[1]Maximum shaft or housing fillet radius that bearing corners will clear.

[2]These factors apply for both inch and metric calculations. See engineering section for instructions on use.

[3]Geometry constant for Lubrication Life Factor a31 is found in the Bearing Ratings section of the Engineering Manual (order no. 10424).

[4]See thermal reference speed in the Engineering Manual (order no. 10424) and on page 61.

[5]See limiting speed on page 61.

Continued on next page.

SPHERICAL ROLLER BEARINGS – *continued*

- Shaft and housing fits, internal clearances, tolerances and other technical data for these bearings are found in the engineering section of this catalog and the Timken Engineering Manual (order no. 10424).
- Bearings are available with a tapered bore for adapter-type mounting. To order, add the suffix "K" to bearing number (e.g., 23120K).
- Consult your Timken sales engineer for up-to-date information about the availability of the bearings you have selected.

Continued from previous page.

Bearing Part Number	Bearing Dimensions			Load Ratings		Cage Type	Mounting Data			Equivalent Radial Load Factors[2]				Geometry Factor[3] C_g	Speed Reference			Weight
	Bore d	O.D. D	Width B	Dynamic C	Static C_o		Fillet[1] (Max.) R	Backing Diameter Shaft d_a	Backing Diameter Housing D_a	e	Dynamic $\frac{F_a}{F_r} \le e$ X = 1 Y	Dynamic $\frac{F_a}{F_r} > e$ X = 0.67 Y	Static In All Cases Y_0		Thermal Reference Speed[4] Oil	Thermal Reference Speed[4] Grease	Limiting Speed[5]	
	mm in.	mm in.	mm in.	kN lbf.	kN lbf.		mm in.	mm in.	mm in.						RPM	RPM	RPM	kg lbs.
24184	**420** 16.5354	**700** 27.5591	**280** 11.0236	**6990** 1570000	**12400** 2780000	YMB	**5** 0.2	**474** 18.7	**636** 25.1	0.37	1.81	2.70	1.77	0.096	270	260	510	**432.6** 951.7
23284	**420** 16.5354	**760** 29.9213	**272** 10.7087	**7360** 1650000	**11800** 2660000	YMB	**6** 0.2	**490** 19.3	**681** 26.8	0.35	1.90	2.83	1.86	0.098	360	330	750	**541.0** 1191.0
23988	**440** 17.3228	**600** 23.6220	**118** 4.6457	**2760** 619000	**5040** 1130000	EMB	**3** 0.1	**479** 18.9	**566** 22.3	0.17	3.93	5.85	3.84	0.154	710	600	1180	**98.0** 215.6
23088	**440** 17.3228	**650** 25.5906	**157** 6.1811	**3750** 844000	**6970** 1570000	YMB	**5** 0.2	**489** 19.3	**603** 23.7	0.22	3.04	4.53	2.97	0.096	680	590	1160	**180.0** 396.0
24088	**440** 17.3228	**650** 25.5906	**212** 8.3465	**4910** 1100000	**9770** 2200000	YMB	**5** 0.2	**485** 19.1	**603** 23.7	0.29	2.31	3.44	2.26	0.096	450	410	950	**241.8** 532.0
23188	**440** 17.3228	**720** 28.3465	**226** 8.8976	**5970** 1340000	**10300** 2310000	YMB	**5** 0.2	**500** 19.7	**657** 25.9	0.30	2.26	3.37	2.21	0.098	450	410	940	**367.8** 809.2
24188	**440** 17.3228	**720** 28.3465	**280** 11.0236	**7120** 1600000	**12900** 2900000	YMB	**5** 0.2	**495** 19.5	**656** 25.8	0.36	1.88	2.79	1.84	0.098	260	250	500	**449.1** 988.0
23288	**440** 17.3228	**790** 31.1024	**280** 11.0236	**8090** 1820000	**13200** 2970000	YMB	**6** 0.2	**512** 20.1	**710** 28.0	0.35	1.95	2.91	1.91	0.101	320	300	760	**602.0** 1324.4
23992	**460** 18.1102	**620** 24.4094	**118** 4.6457	**2520** 567000	**5100** 1150000	YMB	**3** 0.1	**499** 19.7	**586** 23.1	0.16	4.14	6.17	4.05	0.098	680	580	1200	**100.9** 222.0
23092	**460** 18.1102	**680** 26.7717	**163** 6.4173	**4060** 913000	**7570** 1700000	YMB	**5** 0.2	**512** 20.1	**631** 24.9	0.22	3.06	4.56	2.99	0.099	640	550	1090	**205.0** 451.0
24092	**460** 18.1102	**680** 26.7717	**218** 8.5827	**5210** 1170000	**10300** 2330000	YMB	**5** 0.2	**507** 20.0	**631** 24.8	0.28	2.37	3.53	2.32	0.099	430	390	900	**270.8** 595.8
23192	**460** 18.1102	**760** 29.9213	**240** 9.4488	**6500** 1460000	**11100** 2500000	YMB	**6** 0.2	**524** 20.6	**692** 27.2	0.30	2.24	3.33	2.19	0.101	430	390	760	**436.9** 961.2
24192	**460** 18.1102	**760** 29.9213	**300** 11.8110	**8200** 1840000	**14900** 3350000	YMB	**6** 0.2	**518** 20.4	**692** 27.2	0.37	1.84	2.74	1.80	0.102	230	220	460	**544.9** 1198.7
23292	**460** 18.1102	**830** 32.6772	**296** 11.6535	**8680** 1950000	**14000** 3150000	YMB	**6** 0.2	**535** 21.1	**746** 29.4	0.34	1.96	2.93	1.92	0.103	310	290	670	**696.7** 1532.7
23896	**480** 18.8976	**600** 23.6220	**90** 3.5433	**1910** 430000	**3950** 888000	EMB	**2.5** 0.1	**511** 20.1	**576** 22.67	0.13	5.38	8.01	5.26	0.159	340	300	1110	**57.0** 127.0
23996	**480** 18.8976	**650** 25.5906	**128** 5.0394	**2820** 633000	**5890** 1320000	YMB	**4** 0.2	**523** 20.6	**612** 24.1	0.17	3.99	5.94	3.90	0.101	640	550	1120	**123.3** 271.2
23096	**480** 18.8976	**700** 27.5591	**165** 6.4961	**4170** 938000	**7980** 1790000	YMB	**5** 0.2	**532** 21.0	**651** 25.6	0.22	3.14	4.67	3.07	0.102	600	530	1050	**215.0** 473.0
24096	**480** 18.8976	**700** 27.5591	**218** 8.5827	**5450** 1230000	**10900** 2450000	YMB	**5** 0.2	**526** 20.7	**652** 25.7	0.28	2.45	3.64	2.39	0.101	410	370	820	**282.1** 620.6

[1]Maximum shaft or housing fillet radius that bearing corners will clear.
[2]These factors apply for both inch and metric calculations. See engineering section for instructions on use.
[3]Geometry constant for Lubrication Life Factor a31 is found in the Bearing Ratings section of the Engineering Manual (order no. 10424).
[4]See thermal reference speed in the Engineering Manual (order no. 10424) and on page 61.
[5]See limiting speed on page 61.

Continued on next page.

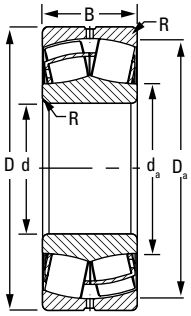

EJ

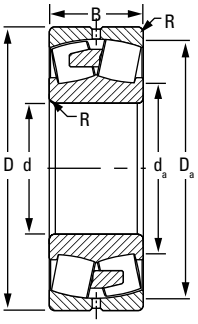

EM/YM

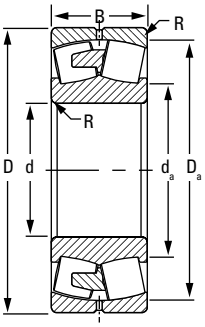

EMB/YMB

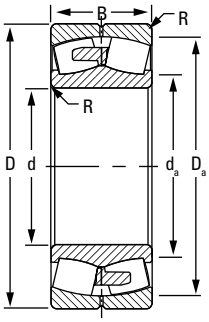

YMD

Continued from previous page.

Bearing Part Number	Bearing Dimensions			Load Ratings		Cage Type	Mounting Data			Equivalent Radial Load Factors[2]				Geometry Factor[3] C_g	Speed Reference			Weight
	Bore d	O.D. D	Width B	Dynamic C	Static C_o		Fillet[1] (Max.) R	Backing Diameter Shaft d_a	Backing Diameter Housing D_a	e	Dynamic $\frac{F_a}{F_r} \le e$ X = 1 Y	Dynamic $\frac{F_a}{F_r} > e$ X = 0.67 Y	Static In All Cases Y_0		Thermal Reference Speed[4] Oil	Thermal Reference Speed[4] Grease	Limiting Speed[5]	
	mm in.	mm in.	mm in.	kN lbf.	kN lbf.		mm in.	mm in.	mm in.						RPM	RPM	RPM	kg lbs.
23196	**480** 18.8976	**790** 31.1024	**248** 9.7638	**7110** 1600000	**12400** 2790000	YMB	**6** 0.2	**547** 21.5	**719** 28.3	0.30	2.26	3.36	2.21	0.104	390	360	840	**490.4** 1078.9
24196	**480** 18.8976	**790** 31.1024	**308** 12.1260	**8580** 1930000	**15900** 3570000	YMB	**6** 0.2	**542** 21.3	**718** 28.3	0.37	1.85	2.75	1.81	0.105	220	210	410	**605.3** 1331.7
23296	**480** 18.8976	**870** 34.2520	**310** 12.2047	**9860** 2220000	**16400** 3690000	YMB	**6** 0.2	**561** 22.1	**779** 30.7	0.35	1.92	2.85	1.87	0.107	280	260	680	**821.2** 1806.6
238/500	**500** 19.6850	**620** 24.4094	**90** 3.5433	**1750** 393000	**4010** 902000	YMB	**2.5** 0.1	**531** 20.9	**596** 23.5	0.12	5.68	8.45	5.55	0.101	330	290	1060	**60.0** 132.0
239/500	**500** 19.6850	**670** 26.3779	**128** 5.0394	**2910** 653000	**6060** 1360000	YMB	**4** 0.2	**542** 21.4	**634** 25.0	0.16	4.13	6.15	4.04	0.103	610	520	1070	**125.7** 276.5
230/500	**500** 19.6850	**720** 28.3465	**167** 6.5748	**4290** 965000	**8160** 1840000	YMB	**5** 0.2	**550** 21.7	**673** 26.5	0.21	3.26	4.85	3.18	0.104	580	510	1010	**222.0** 488.4
240/500	**500** 19.6850	**720** 28.3465	**218** 8.5827	**5510** 1240000	**11200** 2510000	YMB	**5** 0.2	**547** 21.5	**673** 26.5	0.27	2.51	3.74	2.45	0.104	390	350	810	**290.8** 639.8
231/500	**500** 19.6850	**830** 32.6772	**264** 10.3937	**7880** 1770000	**13900** 3130000	YMB	**6** 0.2	**572** 22.5	**753** 29.7	0.30	2.22	3.30	2.17	0.107	360	330	800	**584.3** 1285.5
241/500	**500** 19.6850	**830** 32.6772	**325** 12.7953	**9660** 2170000	**17600** 3950000	YMB	**6** 0.2	**563** 22.1	**755** 29.7	0.37	1.81	2.69	1.77	0.107	200	200	380	**700.0** 1540.0
232/500	**500** 19.6850	**920** 36.2205	**336** 13.2283	**10900** 2460000	**17900** 4010000	YMB	**6** 0.2	**585** 23.0	**824** 32.4	0.36	1.90	2.83	1.86	0.110	260	250	620	**995.1** 2189.2
239/530	**530** 20.8661	**710** 27.9528	**136** 5.3543	**3270** 735000	**6880** 1550000	YMB	**4** 0.2	**575** 22.6	**672** 26.4	0.16	4.11	6.12	4.02	0.107	560	480	1000	**150.4** 330.9
230/530	**530** 20.8661	**780** 30.7087	**185** 7.2835	**5150** 1160000	**9720** 2190000	YMB	**5** 0.2	**588** 23.2	**725** 28.6	0.21	3.14	4.68	3.07	0.108	530	460	910	**302.6** 665.7
240/530	**530** 20.8661	**780** 30.7087	**250** 9.8425	**6770** 1520000	**13700** 3080000	YMB	**5** 0.2	**583** 23.0	**725** 28.5	0.28	2.37	3.53	2.32	0.108	350	320	750	**408.0** 897.6
231/530	**530** 20.8661	**870** 34.2520	**272** 10.7087	**8530** 1920000	**15100** 3400000	YMB	**6** 0.2	**603** 23.7	**793** 31.2	0.30	2.27	3.38	2.22	0.111	340	310	740	**650.6** 1431.3
241/530	**530** 20.8661	**870** 34.2520	**335** 13.1890	**10300** 2300000	**19100** 4290000	YMD	**6** 0.2	**596** 23.5	**794** 31.3	0.36	1.90	2.83	1.86	0.111	190	180	360	**791.0** 1740.0
232/530	**530** 20.8661	**980** 38.5827	**355** 13.9764	**12400** 2780000	**20200** 4550000	YMB	**7** 0.3	**621** 24.4	**878** 34.6	0.35	1.91	2.85	1.87	0.115	240	230	550	**1164.0** 2560.8

[1]Maximum shaft or housing fillet radius that bearing corners will clear.

[2]These factors apply for both inch and metric calculations. See engineering section for instructions on use.

[3]Geometry constant for Lubrication Life Factor a31 is found in the Bearing Ratings section of the Engineering Manual (order no. 10424).

[4]See thermal reference speed in the Engineering Manual (order no. 10424) and on page 61.

[5]See limiting speed on page 61.

Continued on next page.

SPHERICAL ROLLER BEARINGS – *continued*

- Shaft and housing fits, internal clearances, tolerances and other technical data for these bearings are found in the engineering section of this catalog and the Timken Engineering Manual (order no. 10424).
- Bearings are available with a tapered bore for adapter-type mounting. To order, add the suffix "K" to bearing number (e.g., 23120K).
- Consult your Timken sales engineer for up-to-date information about the availability of the bearings you have selected.

Continued from previous page.

Bearing Part Number	Bearing Dimensions			Load Ratings		Cage Type	Mounting Data			Equivalent Radial Load Factors[2]				Geometry Factor[3] C_g	Speed Reference			Weight
	Bore d	O.D. D	Width B	Dynamic C	Static C_o		Fillet[1] (Max.) R	Backing Diameter Shaft d_a	Backing Diameter Housing D_a	Dynamic e	Dynamic $\frac{F_a}{F_r} \le e$ X = 1 Y	Dynamic $\frac{F_a}{F_r} > e$ X = 0.67 Y	Static In All Cases Y_0		Thermal Reference Speed[4] Oil	Thermal Reference Speed[4] Grease	Limiting Speed[5]	
	mm in.	mm in.	mm in.	kN lbf.	kN lbf.		mm in.	mm in.	mm in.						RPM	RPM	RPM	kg lbs.
239/560	**560** 22.0472	**750** 29.5276	**140** 5.5118	**3500** 787000	**7290** 1640000	YMB	**4** 0.2	**607** 23.9	**710** 28.0	0.16	4.21	6.27	4.12	0.110	530	450	890	**172.4** 379.3
230/560	**560** 22.0472	**820** 32.2835	**195** 7.6772	**5690** 1280000	**10800** 2430000	YMB	**5** 0.2	**619** 24.4	**764** 30.1	0.22	3.14	4.67	3.07	0.112	490	430	850	**349.1** 768.0
240/560	**560** 22.0472	**820** 32.2835	**258** 10.1575	**7140** 1600000	**14800** 3330000	YMB	**5** 0.2	**617** 24.3	**761** 30.0	0.28	2.42	3.60	2.37	0.112	330	300	670	**463.9** 1020.6
231/560	**560** 22.0472	**920** 36.2205	**280** 11.0236	**9240** 2080000	**16400** 3680000	YMB	**6** 0.2	**638** 25.1	**838** 33.0	0.29	2.33	3.47	2.28	0.115	310	290	690	**751.0** 1652.2
241/560	**560** 22.0472	**920** 36.2205	**355** 13.9764	**11700** 2630000	**21800** 4900000	YMB	**6** 0.2	**630** 24.8	**839** 33.0	0.36	1.87	2.78	1.83	0.115	170	160	340	**941.7** 2071.7
241/560	**560** 22.0472	**920** 36.2205	**355** 13.9764	**11700** 2630000	**21800** 4900000	YMD	**6** 0.2	**630** 24.8	**839** 33.0	0.36	1.87	2.78	1.83	0.115	170	160	370	**941.7** 2071.7
232/560	**560** 22.0472	**1030** 40.5512	**365** 14.3701	**13200** 2960000	**22300** 5020000	YMB	**7** 0.3	**661** 26.0	**918** 36.1	0.35	1.96	2.91	1.91	0.119	220	210	550	**1333.0** 2932.6
238/600	**600** 23.6220	**730** 28.7402	**98** 3.8583	**2100** 473000	**5080** 1140000	YMB	**2.5** 0.1	**634** 25.0	**705** 27.8	0.11	6.10	9.09	5.97	0.113	260	230	900	**81.0** 178.2
239/600	**600** 23.6220	**800** 31.4960	**150** 5.9055	**3970** 892000	**8600** 1930000	YMB	**4** 0.2	**650** 25.6	**757** 29.8	0.16	4.20	6.25	4.11	0.115	480	410	870	**209.6** 461.1
230/600	**600** 23.6220	**870** 34.2520	**200** 7.8740	**6040** 1360000	**11700** 2630000	YMB	**5** 0.2	**664** 26.1	**811** 31.9	0.21	3.27	4.87	3.20	0.117	450	400	770	**395.0** 869.0
230/600	**600** 23.6220	**870** 34.2520	**200** 7.8740	**6040** 1360000	**11700** 2630000	YMD	**5** 0.2	**664** 26.1	**811** 31.9	0.21	3.27	4.87	3.20	0.117	450	400	780	**394.0** 867.0
240/600	**600** 23.6220	**870** 34.2520	**272** 10.7087	**8040** 1810000	**16800** 3780000	YMB	**5** 0.2	**658** 25.9	**811** 31.9	0.28	2.44	3.64	2.39	0.117	290	270	660	**538.9** 1185.6
240/600	**600** 23.6220	**870** 34.2520	**272** 10.7087	**8040** 1810000	**16800** 3780000	YMD	**5** 0.2	**658** 25.9	**811** 31.9	0.28	2.44	3.64	2.39	0.117	290	270	670	**538.9** 1185.6
231/600	**600** 23.6220	**980** 38.5827	**300** 11.8110	**10500** 2360000	**18800** 4230000	YMB	**6** 0.2	**681** 26.8	**895** 35.2	0.29	2.32	3.46	2.27	0.120	280	260	620	**905.0** 1991.0
241/600	**600** 23.6220	**980** 38.5827	**375** 14.7638	**12800** 2890000	**23800** 5360000	YMB	**6** 0.2	**673** 26.5	**896** 35.3	0.35	1.95	2.90	1.90	0.119	160	150	290	**1088.9** 2395.4
241/600	**600** 23.6220	**980** 38.5827	**375** 14.7638	**12800** 2890000	**23800** 5360000	YMD	**6** 0.2	**673** 26.5	**896** 35.3	0.35	1.95	2.90	1.90	0.119	160	150	310	**1087.9** 2393.6
232/600	**600** 23.6220	**1090** 42.9134	**388** 15.2756	**15000** 3370000	**25700** 5770000	YMD	**7** 0.3	**702** 27.6	**975.6** 38.4	0.35	1.94	2.89	1.90	0.124	190	180	530	**1565.1** 3443.2
239/630	**630** 24.8031	**850** 33.4646	**165** 6.4961	**4740** 1070000	**10100** 2260000	YMB	**5** 0.2	**684** 26.9	**804** 31.6	0.17	4.02	5.99	3.93	0.119	440	380	790	**267.6** 588.7

[1]Maximum shaft or housing fillet radius that bearing corners will clear.
[2]These factors apply for both inch and metric calculations. See engineering section for instructions on use.
[3]Geometry constant for Lubrication Life Factor a31 is found in the Bearing Ratings section of the Engineering Manual (order no. 10424).
[4]See thermal reference speed in the Engineering Manual (order no. 10424) and on page 61.
[5]See limiting speed on page 61.

Continued on next page.

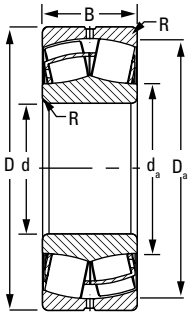

EJ

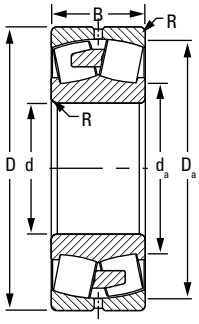

EM/YM

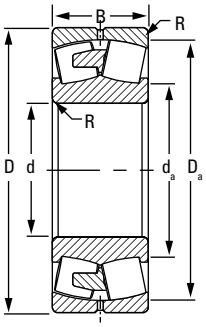

EMB/YMB

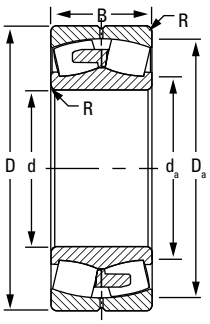

YMD

Continued from previous page.

Bearing Part Number	Bearing Dimensions			Load Ratings		Cage Type	Mounting Data			Equivalent Radial Load Factors[2]				Geometry Factor[3] C_g	Speed Reference			Weight
	Bore d	O.D. D	Width B	Dynamic C	Static C_o		Fillet[1] (Max.) R	Backing Diameter Shaft d_a	Backing Diameter Housing D_a	e	Dynamic $\frac{F_a}{F_r} \le e$ X = 1 Y	Dynamic $\frac{F_a}{F_r} > e$ X = 0.67 Y	Static In All Cases Y_0		Thermal Reference Speed[4] Oil	Thermal Reference Speed[4] Grease	Limiting Speed[5]	
	mm in.	mm in.	mm in.	kN lbf.	kN lbf.		mm in.	mm in.	mm in.						RPM	RPM	RPM	kg lbs.
230/630	**630** 24.8031	**920** 36.2205	**212** 8.3465	**6940** 1560000	**13400** 3010000	YMB	**6** 0.2	**697** 27.4	**858** 33.8	0.21	3.18	4.74	3.11	0.120	420	370	710	**477.2** 1049.8
240/630	**630** 24.8031	**920** 36.2205	**290** 11.4173	**9010** 2030000	**18700** 4200000	YMB	**6** 0.2	**691** 27.2	**857** 33.7	0.28	2.41	3.59	2.36	0.120	270	250	600	**647.8** 1425.2
240/630	**630** 24.8031	**920** 36.2205	**290** 11.4173	**9010** 2030000	**18700** 4200000	YMD	**6** 0.2	**691** 27.2	**857** 33.7	0.28	2.41	3.59	2.36	0.120	270	250	600	**647.1** 1423.6
231/630	**630** 24.8031	**1030** 40.5512	**315** 12.4016	**11700** 2630000	**21200** 4760000	YMD	**6** 0.2	**715** 28.2	**940** 37.0	0.29	2.30	3.42	2.25	0.124	260	240	600	**1056.3** 2323.9
241/630	**630** 24.8031	**1030** 40.5512	**400** 15.7480	**14300** 3220000	**27200** 6120000	YMD	**6** 0.2	**707** 27.8	**940** 37.0	0.36	1.88	2.81	1.84	0.124	140	140	320	**1294.5** 2845.0
238/670	**670** 26.3780	**820** 32.2835	**112** 4.4094	**2800** 630000	**6870** 1550000	YMB	**3** 0.1	**709** 27.9	**790** 31.1	0.11	5.96	8.88	5.83	0.121	210	190	710	**125.5** 276.1
239/670	**670** 26.3780	**900** 35.4331	**170** 6.6929	**5100** 1150000	**11000** 2480000	YMB	**5** 0.2	**727** 28.6	**851** 33.5	0.16	4.15	6.18	4.06	0.124	410	350	740	**306.7** 674.7
230/670	**670** 26.3780	**980** 38.5827	**230** 9.0551	**7890** 1770000	**15800** 3540000	YMB	**6** 0.2	**744** 29.3	**911** 35.9	0.22	3.12	4.65	3.05	0.126	380	330	690	**596.0** 1311.2
240/670	**670** 26.3780	**980** 38.5827	**308** 12.1260	**10200** 2300000	**21800** 4910000	YMB	**6** 0.2	**738** 29.1	**910** 35.8	0.28	2.39	3.55	2.33	0.126	240	230	540	**794.5** 1747.9
231/670	**670** 26.3780	**1090** 42.9134	**336** 13.2283	**12800** 2880000	**23400** 5270000	YMB	**6** 0.2	**760** 30.0	**995** 39.2	0.29	2.31	3.44	2.26	0.128	240	220	530	**1247.0** 2743.3
241/670	**670** 26.3780	**1090** 42.9134	**412** 16.2205	**15700** 3520000	**30000** 6750000	YMD	**6** 0.2	**751** 29.6	**996** 39.2	0.36	1.90	2.82	1.85	0.128	130	130	280	**1513.4** 3329.5
232/670	**670** 26.3780	**1220** 48.0315	**438** 17.2441	**18800** 4220000	**31800** 7140000	YMD	**9** 0.4	**779** 30.7	**1097** 43.2	0.35	1.95	2.91	1.91	0.126	160	160	440	**2181.4** 4799.1
239/710	**710** 27.9528	**950** 37.4016	**180** 7.0866	**5570** 1250000	**12400** 2780000	YMB	**5** 0.2	**771** 30.4	**898** 35.3	0.16	4.13	6.15	4.04	0.129	380	330	690	**360.6** 793.3
230/710	**710** 27.9528	**1030** 40.5512	**236** 9.2913	**8370** 1880000	**16700** 3750000	YMB	**6** 0.2	**785** 30.9	**960** 37.8	0.21	3.26	4.86	3.19	0.130	350	310	620	**658.8** 1449.4
240/710	**710** 27.9528	**1030** 40.5512	**315** 12.4016	**10900** 2440000	**23100** 5200000	YMD	**6** 0.2	**779** 30.7	**960** 37.8	0.27	2.49	3.71	2.44	0.130	230	210	530	**865.2** 1903.5
231/710	**710** 27.9528	**1150** 45.2756	**345** 13.5827	**13800** 3110000	**26000** 5850000	YMB	**7** 0.3	**809** 31.8	**1048** 41.3	0.28	2.38	3.54	2.32	0.133	220	200	500	**1382.7** 3042.0

[1]Maximum shaft or housing fillet radius that bearing corners will clear.

[2]These factors apply for both inch and metric calculations. See engineering section for instructions on use.

[3]Geometry constant for Lubrication Life Factor a31 is found in the Bearing Ratings section of the Engineering Manual (order no. 10424).

[4]See thermal reference speed in the Engineering Manual (order no. 10424) and on page 61.

[5]See limiting speed on page 61.

Continued on next page.

SPHERICAL ROLLER BEARINGS – *continued*

- Shaft and housing fits, internal clearances, tolerances and other technical data for these bearings are found in the engineering section of this catalog and the Timken Engineering Manual (order no. 10424).
- Bearings are available with a tapered bore for adapter-type mounting. To order, add the suffix "K" to bearing number (e.g., 23120K).
- Consult your Timken sales engineer for up-to-date information about the availability of the bearings you have selected.

Continued from previous page.

Bearing Part Number	Bearing Dimensions			Load Ratings		Cage Type	Mounting Data			Equivalent Radial Load Factors[2]				Geometry Factor[3] C_g	Speed Reference			Weight
	Bore d	O.D. D	Width B	Dynamic C	Static C_o		Fillet[1] (Max.) R	Backing Diameter Shaft d_a	Backing Diameter Housing D_a	Dynamic e	Dynamic $\frac{F_a}{F_r} \le e$ X = 1 Y	Dynamic $\frac{F_a}{F_r} > e$ X = 0.67 Y	Static In All Cases Y_0		Thermal Reference Speed[4] Oil	Thermal Reference Speed[4] Grease	Limiting Speed[5]	
	mm in.	mm in.	mm in.	kN lbf.	kN lbf.		mm in.	mm in.	mm in.						RPM	RPM	RPM	kg lbs.
241/710	**710** 27.9528	**1150** 45.2756	**438** 17.2441	**17400** 3910000	**33800** 7590000	YMD	**7** 0.3	**795** 31.3	**1051** 41.4	0.36	1.89	2.81	1.84	0.133	120	110	260	**1754.7** 3860.5
232/710	**710** 27.9528	**1280** 50.3937	**450** 17.7165	**20200** 4550000	**35300** 7950000	YMD	**9** 0.4	**827** 32.6	**1149** 45.2	0.34	1.97	2.93	1.93	0.131	150	140	420	**2478.4** 5452.4
238/750	**750** 29.5276	**920** 36.2205	**128** 5.0394	**3430** 771000	**8460** 1900000	YMB	**4** 0.2	**795** 31.3	**886** 34.9	0.12	5.80	8.64	5.68	0.130	180	170	600	**182.7** 401.9
239/750	**750** 29.5276	**1000** 39.3701	**185** 7.2835	**6010** 1350000	**13400** 3000000	YMB	**5** 0.2	**813** 32.0	**946** 37.3	0.16	4.23	6.30	4.14	0.133	350	310	650	**405.7** 892.6
230/750	**750** 29.5276	**1090** 42.9134	**250** 9.8425	**9330** 2100000	**18700** 4210000	YMB	**6** 0.2	**830** 32.7	**1016** 40.0	0.21	3.26	4.85	3.18	0.135	330	290	600	**786.0** 1729.2
240/750	**750** 29.5276	**1090** 42.9134	**335** 13.1890	**12200** 2730000	**26100** 5870000	YMD	**6** 0.2	**824** 32.4	**1015** 40.0	0.27	2.48	3.69	2.42	0.135	210	190	490	**1049.2** 2308.2
241/750	**750** 29.5276	**1220** 48.0315	**475** 18.7008	**19800** 4450000	**38700** 8700000	YMD	**7** 0.3	**839** 33.0	**1114** 43.9	0.36	1.86	2.77	1.82	0.131	110	100	250	**2144.4** 4717.6
239/800	**800** 31.4961	**1060** 41.7323	**195** 7.6772	**6600** 1480000	**15000** 3380000	YMB	**5** 0.2	**866** 34.1	**1004** 39.5	0.16	4.27	6.36	4.17	0.138	320	280	600	**474.2** 1043.2
249/800	**800** 31.4961	**1060** 41.7323	**258** 10.1575	**8080** 1820000	**19800** 4450000	YMB	**5** 0.2	**863** 34.0	**999** 39.3	0.21	3.25	4.84	3.18	0.136	140	130	430	**612.7** 1347.9
230/800	**800** 31.4961	**1150** 45.2756	**258** 10.1575	**10200** 2300000	**21100** 4750000	YMB	**6** 0.2	**888** 35.0	**1075** 42.3	0.19	3.50	5.22	3.43	0.140	300	260	480	**860.7** 1893.5
230/800	**800** 31.4961	**1150** 45.2756	**258** 10.1575	**10200** 2300000	**21100** 4750000	YMD	**6** 0.2	**888** 35.0	**1075** 42.3	0.19	3.50	5.22	3.43	0.140	300	260	480	**887.2** 1951.8
240/800	**800** 31.4961	**1150** 45.2756	**345** 13.5827	**13000** 2920000	**28600** 6420000	YMD	**6** 0.2	**877** 34.5	**1072** 42.2	0.26	2.55	3.80	2.50	0.140	190	180	460	**1181.1** 2598.4
231/800	**800** 31.4961	**1280** 50.3937	**375** 14.7638	**16600** 3730000	**31400** 7060000	YMB	**7** 0.3	**905** 35.6	**1172** 46.1	0.28	2.45	3.65	2.40	0.136	180	170	430	**1887.0** 4151.4
241/800	**800** 31.4961	**1280** 50.3937	**475** 18.7008	**20000** 4490000	**39200** 8810000	YMD	**7** 0.3	**894** 35.2	**1173** 46.2	0.34	1.96	2.93	1.92	0.135	100	100	230	**2320.8** 5105.9
232/800	**800** 31.4961	**1420** 55.9056	**488** 19.2126	**23900** 5370000	**43600** 9800000	YMD	**11** 0.4	**935** 36.8	**1272** 50.1	0.33	2.04	3.03	1.99	0.140	130	120	400	**3310.0** 7282.0
238/850	**850** 33.4646	**1030** 40.5512	**136** 5.3543	**3920** 881000	**10400** 2330000	YMB	**4** 0.2	**900** 35.4	**993** 39.1	0.11	6.23	9.27	6.09	0.141	150	140	570	**235.7** 518.5
239/850	**850** 33.4646	**1120** 44.0945	**200** 7.8740	**7120** 1600000	**16200** 3650000	YMB	**5** 0.2	**918** 36.1	**1063** 41.9	0.15	4.40	6.56	4.31	0.144	300	260	580	**552.7** 1215.9
249/850	**850** 33.4646	**1120** 44.0945	**272** 10.7087	**8950** 2010000	**22000** 4950000	YMB	**5** 0.2	**913** 36.0	**1057** 41.6	0.21	3.24	4.82	3.16	0.141	120	120	440	**708.0** 1557.6

[1]Maximum shaft or housing fillet radius that bearing corners will clear.
[2]These factors apply for both inch and metric calculations. See engineering section for instructions on use.
[3]Geometry constant for Lubrication Life Factor a31 is found in the Bearing Ratings section of the Engineering Manual (order no. 10424).
[4]See thermal reference speed in the Engineering Manual (order no. 10424) and on page 61.
[5]See limiting speed on page 61.

Continued on next page.

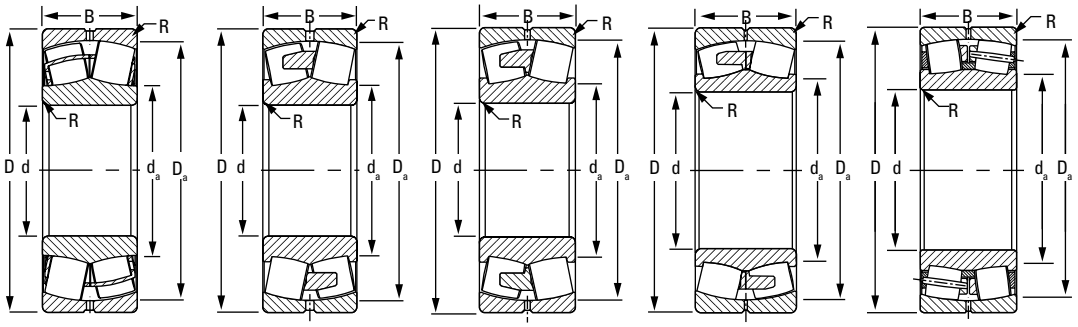

EJ EM/YM EMB/YMB YMD YP

Continued from previous page.

Bearing Part Number	Bearing Dimensions			Load Ratings		Cage Type	Mounting Data			Equivalent Radial Load Factors[2]				Geometry Factor[3] C_g	Speed Reference			Weight
	Bore d	O.D. D	Width B	Dynamic C	Static C_o		Fillet[1] (Max.) R	Backing Diameter Shaft d_a	Backing Diameter Housing D_a	Dynamic e	Dynamic $\frac{F_a}{F_r} \le e$ X = 1 Y	Dynamic $\frac{F_a}{F_r} > e$ X = 0.67 Y	Static In All Cases Y_0		Thermal Reference Speed[4] Oil	Thermal Reference Speed[4] Grease	Limiting Speed[5]	
	mm in.	mm in.	mm in.	kN lbf.	kN lbf.		mm in.	mm in.	mm in.						RPM	RPM	RPM	kg lbs.
230/850	**850** 33.4646	**1220** 48.0315	**295** 11.6142	**11100** 2500000	**23000** 5180000	YMB	**6** 0.2	**938** 36.9	**1139** 44.8	0.20	3.37	5.02	3.30	0.138	280	250	500	**1048.0** 2305.6
240/850	**850** 33.4646	**1220** 48.0315	**365** 14.3701	**14500** 3260000	**32200** 7240000	YMD	**6** 0.2	**931** 36.7	**1138** 44.8	0.26	2.56	3.81	2.50	0.138	170	160	420	**1401.9** 3084.2
231/850	**850** 33.4646	**1360** 53.5433	**400** 15.7480	**18600** 4190000	**35700** 8020000	YMB	**9** 0.4	**962** 37.9	**1245** 49.0	0.28	2.44	3.63	2.39	0.141	170	160	400	**2219.0** 4892.0
232/850	**850** 33.4646	**1500** 59.0551	**515** 20.2756	**25600** 5750000	**47100** 10600000	YMD	**11** 0.4	**990** 39.0	**1347** 53.1	0.33	2.06	3.06	2.01	0.145	120	110	340	**3950.8** 8691.8
239/900	**900** 35.4331	**1180** 46.4567	**206** 8.1102	**7710** 1730000	**18100** 4060000	YMB	**5** 0.2	**965** 38.0	**1112** 43.8	0.14	4.69	6.98	4.58	0.150	270	240	510	**677.4** 1490.3
249/900	**900** 35.4331	**1180** 46.4567	**280** 11.0236	**9480** 2130000	**23500** 5290000	YMB	**5** 0.2	**965** 38.0	**1113** 43.8	0.20	3.33	4.96	3.25	0.146	120	110	400	**811.6** 1785.5
230/900	**900** 35.4331	**1280** 50.3937	**280** 11.0236	**12200** 2740000	**25500** 5740000	YMB	**6** 0.2	**989** 39.0	**1198** 47.2	0.20	3.41	5.08	3.33	0.143	250	230	460	**1130.2** 2486.5
240/900	**900** 35.4331	**1280** 50.3937	**375** 14.7638	**15700** 3530000	**35200** 7900000	YMD	**6** 0.2	**983** 38.7	**1198** 47.1	0.26	2.60	3.87	2.54	0.143	160	150	390	**1557.0** 3425.1
231/900	**900** 35.4331	**1420** 55.9055	**412** 16.2205	**19700** 4420000	**38900** 8730000	YMB	**9** 0.4	**1017** 40.0	**1301** 51.2	0.27	2.49	3.71	2.43	0.146	150	150	380	**2446.0** 5393.0
241/900	**900** 35.4331	**1420** 55.9055	**515** 20.2756	**24100** 5430000	**50300** 11300000	YMD	**9** 0.4	**1007** 39.7	**1299** 51.2	0.34	2.00	2.98	1.96	0.146	80	80	200	**3054.3** 6719.6
232/900	**900** 35.4331	**1580** 62.2047	**515** 20.2756	**27700** 6230000	**52300** 11800000	YMD	**11** 0.4	**1058** 41.6	**1417** 55.8	0.31	2.16	3.22	2.12	0.152	100	100	320	**4302.0** 9464.4
239/950	**950** 37.4016	**1250** 49.2126	**224** 8.8189	**8690** 1950000	**20400** 4580000	YMB	**6** 0.2	**1026** 40.4	**1186** 46.7	0.15	4.43	6.60	4.33	0.146	260	230	500	**712.7** 1567.9
230/950	**950** 37.4016	**1360** 53.5433	**300** 11.8110	**13600** 3060000	**28500** 6410000	YMB	**6** 0.2	**1047** 41.2	**1271** 50.0	0.20	3.42	5.09	3.34	0.148	240	210	450	**1428.6** 3142.9
230/950	**950** 37.4016	**1360** 53.5433	**300** 11.8110	**13600** 3060000	**28500** 6410000	YMD	**6** 0.2	**1047** 41.2	**1271** 50.0	0.20	3.42	5.09	3.34	0.148	240	210	450	**1530.4** 3366.8
240/950	**950** 37.4016	**1360** 53.5433	**412** 16.2205	**18100** 4070000	**40800** 9180000	YMD	**6** 0.2	**1039** 40.9	**1270** 50.0	0.27	2.53	3.77	2.47	0.148	150	140	380	**1921.0** 4225.3
231/950	**950** 37.4016	**1500** 59.0551	**438** 17.2441	**22000** 4950000	**43900** 9880000	YMB	**9** 0.4	**1074** 42.3	**1373** 54.1	0.27	2.47	3.68	2.42	0.151	140	130	350	**2905.0** 6404.0

[1]Maximum shaft or housing fillet radius that bearing corners will clear.

[2]These factors apply for both inch and metric calculations. See engineering section for instructions on use.

[3]Geometry constant for Lubrication Life Factor a31 is found in the Bearing Ratings section of the Engineering Manual (order no. 10424).

[4]See thermal reference speed in the Engineering Manual (order no. 10424) and on page 61.

[5]See limiting speed on page 61.

Continued on next page.

SPHERICAL ROLLER BEARINGS – *continued*

- Shaft and housing fits, internal clearances, tolerances and other technical data for these bearings are found in the engineering section of this catalog and the Timken Engineering Manual (order no. 10424).
- Bearings are available with a tapered bore for adapter-type mounting. To order, add the suffix "K" to bearing number (e.g., 23120K).
- Consult your Timken sales engineer for up-to-date information about the availability of the bearings you have selected.

Continued from previous page.

Bearing Part Number	Bearing Dimensions			Load Ratings		Cage Type	Mounting Data			Equivalent Radial Load Factors[2]				Geometry Factor[3] C_g	Speed Reference			Weight
	Bore d	O.D. D	Width B	Dynamic C	Static C_o		Fillet[1] (Max.) R	Backing Diameter Shaft d_a	Backing Diameter Housing D_a	Dynamic e	Dynamic $\frac{F_a}{F_r} \le e$ X = 1 Y	Dynamic $\frac{F_a}{F_r} > e$ X = 0.67 Y	Static In All Cases Y_0		Thermal Reference Speed[4] Oil	Thermal Reference Speed[4] Grease	Limiting Speed[5]	
	mm in.	mm in.	mm in.	kN lbf.	kN lbf.		mm in.	mm in.	mm in.						RPM	RPM	RPM	kg lbs.
241/950	**950** 37.4016	**1500** 59.0551	**545** 21.4567	**26800** 6030000	**56400** 12700000	YMD	**9** 0.4	**1064** 41.9	**1372** 54.0	0.34	2.00	2.97	1.95	0.151	80	70	180	**3615.0** 7969.0
238/1000	**1000** 39.3701	**1220** 48.0315	**165** 6.4961	**5270** 1190000	**14100** 3180000	YMB	**5** 0.2	**1049** 41.3	**1169** 46.0	0.12	5.83	8.67	5.70	0.148	120	110	440	**409.2** 900.3
239/1000	**1000** 39.3701	**1320** 51.9685	**236** 9.2913	**9770** 2200000	**22800** 5120000	YMB	**6** 0.2	**1080** 42.5	**1252** 49.3	0.15	4.39	6.54	4.29	0.152	240	210	480	**862.0** 1901.0
230/1000	**1000** 39.3701	**1420** 55.9055	**308** 12.1260	**14600** 3290000	**31700** 7120000	YMB	**6** 0.2	**1101** 43.4	**1327** 52.3	0.20	3.44	5.12	3.36	0.153	220	200	400	**1541.0** 3397.0
240/1000	**1000** 39.3701	**1420** 55.9055	**412** 16.2205	**18300** 4110000	**41300** 9270000	YMD	**6** 0.2	**1093** 43.1	**1330** 52.4	0.25	2.69	4.01	2.63	0.154	140	130	320	**2087.1** 4591.6
231/1000	**1000** 39.3701	**1580** 62.2047	**462** 18.1890	**24400** 5480000	**49000** 11000000	YMB	**9** 0.4	**1131** 44.5	**1446** 56.9	0.27	2.47	3.68	2.42	0.156	130	120	330	**3403.0** 7502.0
241/1000	**1000** 39.3701	**1580** 62.2047	**580** 22.8346	**29800** 6700000	**61400** 13800000	YMD	**9** 0.4	**1114** 43.9	**1451** 57.1	0.33	2.02	3.01	1.98	0.156	70	70	160	**4276.4** 9408.1
238/1060	**1060** 41.7323	**1280** 50.3937	**165** 6.4961	**5340** 1200000	**14600** 3290000	YMD	**5** 0.2	**1122** 44.2	**1233** 48.6	0.11	6.23	9.27	6.09	0.153	120	110	440	**432.6** 951.7
239/1060	**1060** 41.7323	**1400** 55.1181	**250** 9.8425	**10700** 2410000	**25800** 5810000	YMB	**6** 0.2	**1149** 45.3	**1324** 52.1	0.15	4.43	6.60	4.33	0.157	220	190	450	**1056.4** 2324.1
230/1060	**1060** 41.7323	**1500** 59.0551	**325** 12.7953	**16200** 3650000	**35300** 7930000	YMB	**7** 0.3	**1165** 45.9	**1404** 55.3	0.20	3.44	5.12	3.36	0.159	200	180	390	**1802.0** 3972.0
240/1060	**1060** 41.7323	**1500** 59.0551	**438** 17.2441	**20200** 4550000	**47300** 10600000	YMD	**7** 0.3	**1160** 45.7	**1401** 55.2	0.26	2.63	3.91	2.57	0.158	130	120	340	**2470.5** 5435.1
231/1060	**1060** 41.7323	**1660** 65.3543	**475** 18.7008	**26300** 5920000	**53000** 11900000	YMB	**11** 0.4	**1193** 47.0	**1525** 60.0	0.27	2.53	3.77	2.48	0.162	120	110	310	**3815.0** 8412.0
239/1120	**1120** 44.0945	**1460** 57.4803	**250** 9.8425	**11200** 2530000	**26700** 6010000	YMB	**6** 0.2	**1204** 47.42	**1390** 54.7	0.15	4.62	6.87	4.51	0.162	190	170	370	**1079.0** 2373.8
230/1120	**1120** 44.0945	**1580** 62.2047	**345** 13.5827	**16700** 3750000	**36700** 8260000	YMD	**9** 0.4	**1237** 48.7	**1480** 58.3	0.20	3.41	5.08	3.33	0.164	190	170	380	**2109.0** 4649.0
240/1120	**1120** 44.0945	**1580** 62.2047	**462** 18.1890	**22100** 4970000	**52100** 11700000	YMB	**7** 0.3	**1224** 48.2	**1476** 58.1	0.26	2.62	3.90	2.56	0.164	120	110	290	**2824.0** 6226.0
231/1120	**1120** 44.0945	**1750** 68.8976	**475** 18.7008	**27700** 6230000	**55500** 12500000	YMB	**11** 0.4	**1261** 49.7	**1609** 63.4	0.25	2.67	3.98	2.62	0.167	110	110	290	**4227.0** 9319.0
238/1180	**1180** 46.4567	**1420** 55.9055	**180** 7.0866	**6330** 1420000	**17600** 3960000	YMB	**5** 0.2	**1243** 48.9	**1365** 53.7	0.11	6.36	9.46	6.21	0.145	100	90	370	**545.8** 1200.9
239/1180	**1180** 46.4567	**1540** 60.6300	**288** 11.3386	**12700** 2860000	**31000** 6970000	YMB	**6** 0.2	**1271** 50.0	**1464** 57.6	0.15	4.51	6.71	4.41	0.168	190	170	410	**1331.5** 2929.4

[1]Maximum shaft or housing fillet radius that bearing corners will clear.
[2]These factors apply for both inch and metric calculations. See engineering section for instructions on use.
[3]Geometry constant for Lubrication Life Factor a31 is found in the Bearing Ratings section of the Engineering Manual (order no. 10424).
[4]See thermal reference speed in the Engineering Manual (order no. 10424) and on page 61.
[5]See limiting speed on page 61.

Continued on next page.

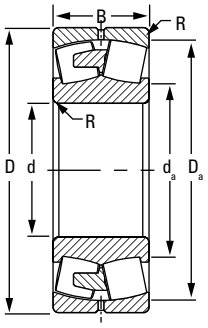

EMB/YMB

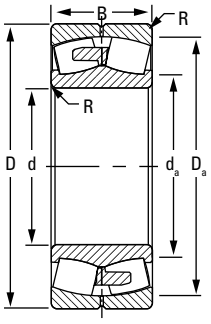

YMD

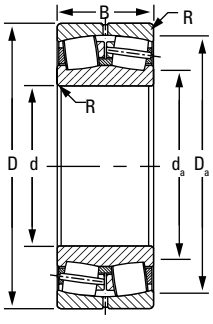

YP

Continued from previous page.

Bearing Part Number	Bearing Dimensions			Load Ratings		Cage Type	Mounting Data			Equivalent Radial Load Factors[2]				Geometry Factor[3] C_g	Speed Reference			Weight
	Bore d	O.D. D	Width B	Dynamic C	Static C_o		Fillet[1] (Max.) R	Backing Diameter Shaft d_a	Backing Diameter Housing D_a	Dynamic e	Dynamic $\frac{F_a}{F_r} \le e$ X = 1 Y	Dynamic $\frac{F_a}{F_r} > e$ X = 0.67 Y	Static In All Cases Y_0		Thermal Reference Speed[4] Oil	Thermal Reference Speed[4] Grease	Limiting Speed[5]	
	mm in.	**mm** in.	**mm** in.	**kN** lbf.	**kN** lbf.		**mm** in.	**mm** in.	**mm** in.						RPM	RPM	RPM	**kg** lbs.
230/1180	**1180** 46.4567	**1660** 65.3543	**355** 13.9764	**19200** 4320000	**43200** 9700000	YMD	**7** 0.3	**1293** 50.9	**1558** 61.34	0.19	3.50	5.21	3.42	0.170	170	160	340	**2447.9** 5385.4
240/1180	**1180** 46.4567	**1660** 65.3543	**475** 18.7008	**23700** 5320000	**56000** 12600000	YMD	**7** 0.3	**1289** 50.7	**1553** 61.1	0.25	2.69	4.00	2.63	0.169	110	100	290	**3228.3** 7102.3
231/1180	**1180** 46.4567	**1850** 72.8346	**500** 19.6850	**30600** 6890000	**61700** 13900000	YMB	**11** 0.4	**1332** 52.4	**1699** 66.9	0.25	2.68	4.00	2.62	0.173	100	100	270	**4996.0** 11014.0
230/1250	**1250** 49.2126	**1750** 68.8976	**375** 14.7638	**20700** 4660000	**46300** 10400000	YMB	**7** 0.3	**1370** 54.0	**1642** 64.6	0.19	3.56	5.30	3.48	0.175	160	150	310	**2769.0** 6091.8
240/1250	**1250** 49.2126	**1750** 68.8976	**500** 19.6850	**27200** 6120000	**65800** 14800000	YMB	**7** 0.3	**1362** 53.6	**1640** 64.6	0.25	2.68	3.99	2.62	0.176	100	90	250	**3691.0** 8120.2
231/1250	**1250** 49.2126	**1950** 76.7717	**530** 20.8661	**34100** 7660000	**69300** 15600000	YMB	**11** 0.4	**1406** 55.4	**1795** 70.7	0.25	2.67	3.98	2.62	0.179	90	90	250	**5843.0** 12854.6
249/1500	**1500** 59.0551	**1950** 76.7717	**450** 17.7165	**22700** 5110000	**61500** 13800000	YMD	**7** 0.3	**1611** 63.4	**1845** 72.6	0.20	3.43	5.10	3.35	0.191	50	50	190	**3407.0** 7495.4

[1]Maximum shaft or housing fillet radius that bearing corners will clear.
[2]These factors apply for both inch and metric calculations. See engineering section for instructions on use.
[3]Geometry constant for Lubrication Life Factor a_{31} is found in the Bearing Ratings section of the Engineering Manual (order no. 10424).
[4]See thermal reference speed in the Engineering Manual (order no. 10424) and on page 61.
[5]See limiting speed on page 61.

SNT SPHERICAL ROLLER BEARING PLUMMER BLOCKS

Spherical roller bearing plummer blocks combine rugged cast iron, ductile iron or steel housings with high-capacity bearings to meet the toughest demands of industry. Each plummer block contains an advanced-design spherical roller bearing with improved geometry and raceway finish for maximized load capacity and service life. Integrated housing and bearing features enhance unit lubrication characteristics. Multiple sealing options protect against contamination.

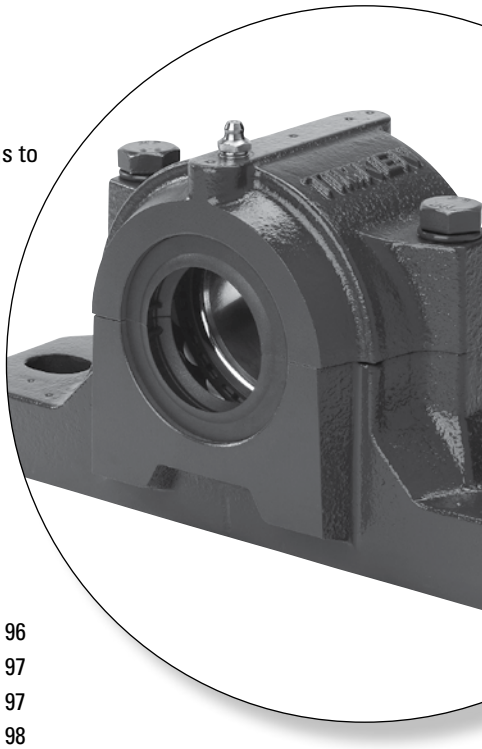

Nomenclature 96
Introduction 97
Design and Construction 97
Mounting 98
SNT Lubrication 99
Seals 99
Load Ratings and Life 100
Installation Guides 101
Two-Bolt SNT Housings For Tapered Bore Bearings 106
Four-Bolt FSNT Housings For Tapered Bore Bearings 112
Two-Bolt SNT Housings For Cylindrical Bore Bearings 116
Four-Bolt FSNT Housings for Cylindrical Bore Bearings 120
Large Plummer Block Housings – 3000 And 3100 Series 124
Metric Shaft Diameters 128

NOMENCLATURE

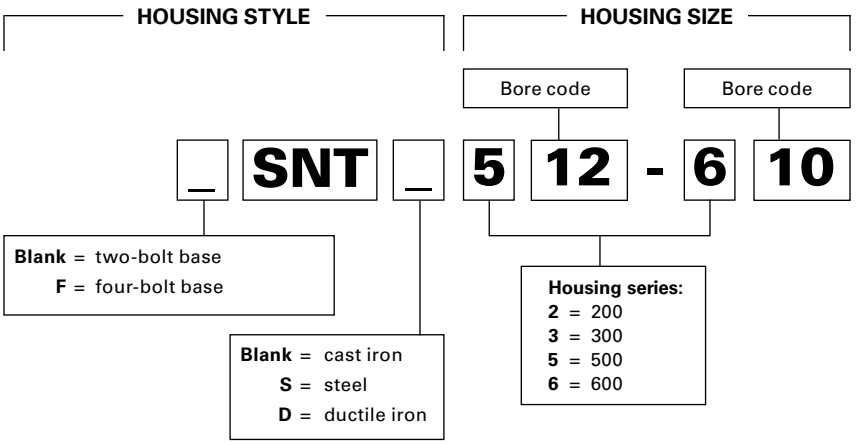

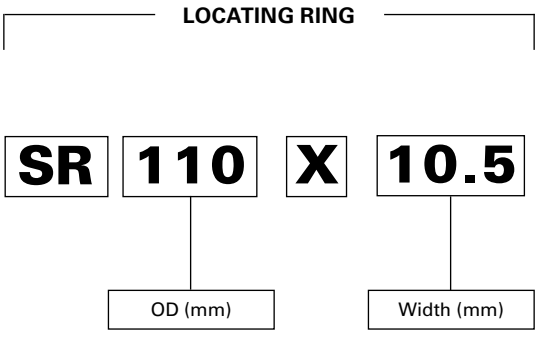

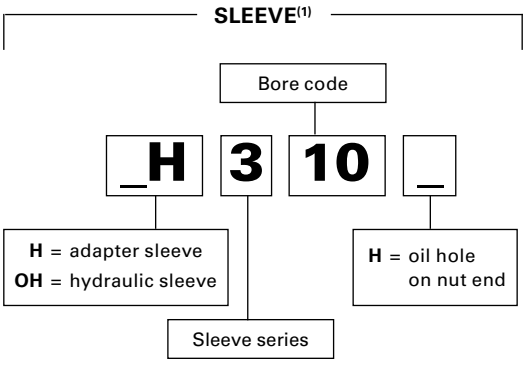

(1)Sleeve assemblies contain adapter sleeve, locknut, and lockwasher

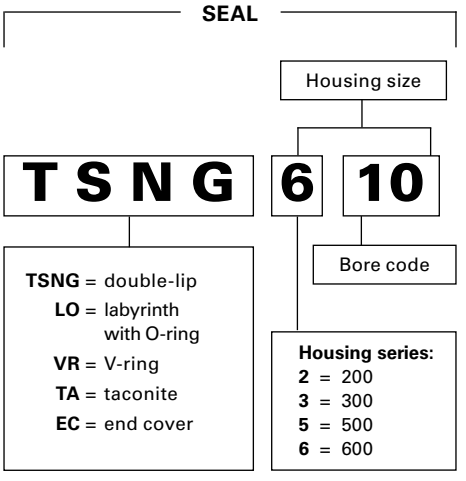

TABLE 28. TAPERED BORE BEARING EXAMPLE FOR SNT 512-610

Bearing	21310K	22310K	22212K
Locating rings	SR110X10.5	SR110X4	SR110X10
Sleeve	H310	H2310	H312
SEAL OPTIONS			
Double-lip	TSNG610	TSNG610	TSNG512
LOR	LO610	LO610	LO512
V-ring	VR610	VR610	VR512
Taconite	TA610	TA610	TA512
End cover	EC512-610	EC512-610	EC512-610

Fig. 24. SNT plummer block nomenclature.

INTRODUCTION

Timken's capabilities in engineering and manufacturing heavy-duty plummer blocks help ensure high performance from our products. In addition, Timken's worldwide sales organization is staffed with experienced engineers who are available for consultation on any plummer block or bearing application. If your design calls for shaft sizes or loads not listed in this catalog, contact your Timken sales engineer for information about availability of special units.

- **Sizes:** 20–400 mm shafts.
- **Applications:** Conveyors, ball mills, casters, rolling mills, heavy movable structures.
- **Features:** Split construction for convenient assembly and disassembly. These units include pry-tool slots and multiple alignment features to ease installation. There are center marks to simplify alignment and dimples for positioning pins and four-bolt mounting. Seal grooves allow for various sealing options.
- **Benefits:** Caps can be removed easily and quickly without damage to the bearing or housing. The design allows for simplified bearing inspection, service and replacement.

DESIGN AND CONSTRUCTION

Timken offers split plummer block housings that can be built with either tapered bore bearings with adapters for mounting on straight shafts or cylindrical bore bearings for assembly on shouldered shafts. Each offering includes all the accessories to meet a variety of needs.

Timken uses a system of doweling caps and bases together at an early stage of manufacturing, so that they remain a single unit during machining. They are not interchangeable as separate parts and become precisely mated components, helping to ensure a precise fit. Timken supplies plummer block housings for mounting with two or four bolts.

Standard caps and bases are made from high-grade, stress-relieved cast iron. They also are available in cast steel and ductile iron.

The illustration below (fig. 25) shows all parts of a plummer block assembly that are described throughout this section.

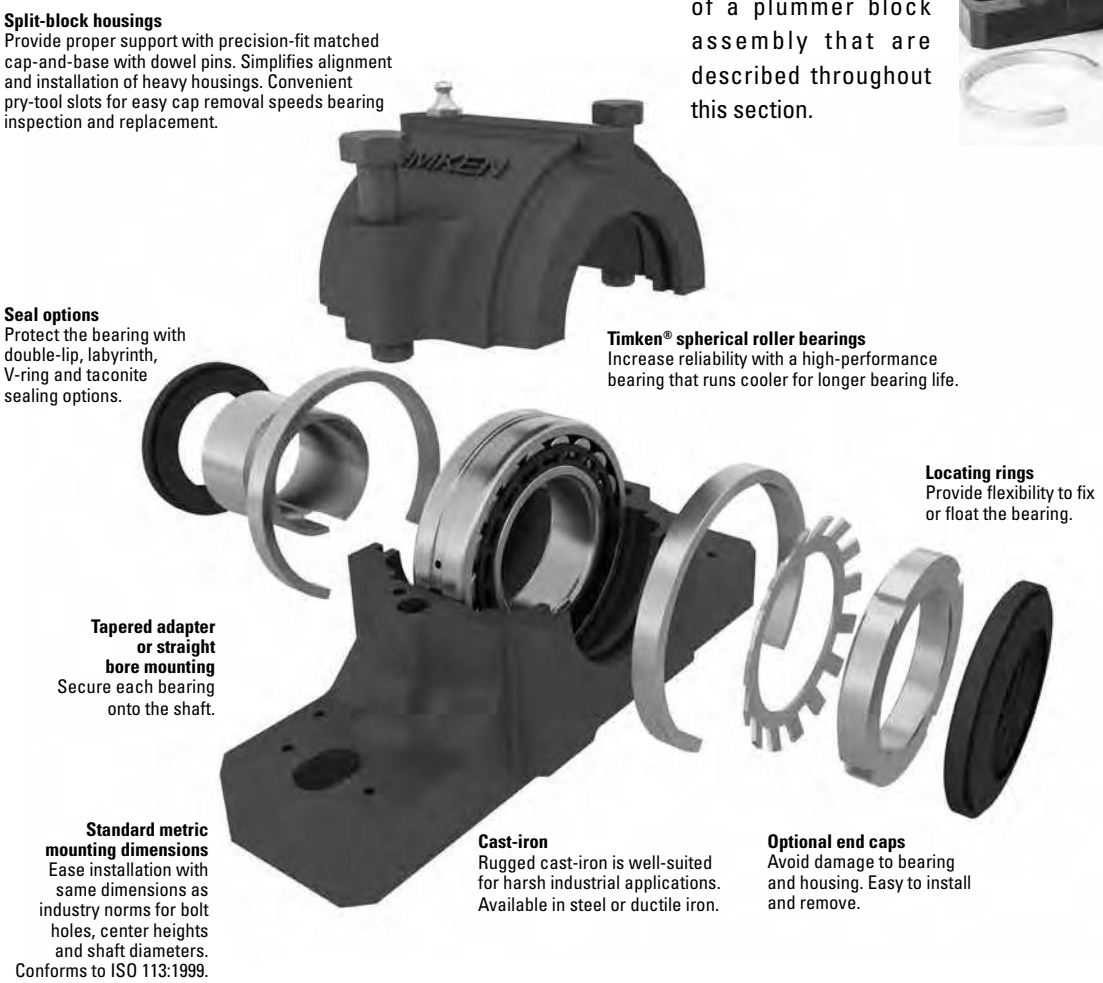

Fig. 25. SNT plummer block components and features.

MOUNTING

ADAPTER VERSUS STRAIGHT BORE

Typically, a spherical roller bearing plummer block assembly is mounted on a straight shaft using a tapered bore bearing and adapter assembly. Standard commercial shafting can be used without additional machining. (Suggested shaft diameters are shown in table 31 on page 128.) Adapter mount also permits maximum flexibility in the axial positioning of the bearing on the shaft and will accommodate light locational thrust loads. Timken plummer blocks for tapered bore and cylindrical bore are available.

Adapter-mounted spherical roller bearings require the correct removal of diametral clearance from the bearing to prevent relative rotation between inner race and sleeve or shaft. For proper shaft mounting of adapter-type spherical roller bearings, see page 22.

When application conditions produce heavy thrust loads, or a need exists for exact axial location or a positive shaft interference fit, a direct straight bore mounting may be the best option. This requires a shouldered shaft, machined for proper fit, and a straight bore bearing. Timken plummer block housings for straight bore applications are available for use with series 213, 222, 223 and 232.

Suggested fits for shafts in cylindrical bore spherical roller bearings are shown in the engineering section of this catalog in table 6 on page 30. For applications involving heavy shock, vibration, unbalanced rotating loads or other non-standard conditions, consult your Timken sales engineer.

FIXED AND FLOAT PLUMMER BLOCKS

SNT split plummer block components include two to six locating rings allowing for installation at either fixed or float positions on the shaft. For the fixed position, two or more locating rings are used on one or both sides of the bearing.

CLOSED-END INSTALLATIONS

In some applications, the shaft end is designed to terminate inside the plummer block. For this design, positive fitting end-cap inserts are available to help seal out contaminants and retain lubricant. Timken heavy-duty end covers provide sealing for closed-end applications.

Designers and installers need to make sure the shaft end does not contact the closure. A minimum of 3 mm clearance at maximum thermal expansion is suggested between the end of the shaft and the closure.

NOTE

Failure to employ proper mounting procedures can cause reduced bearing performance.

SNT LUBRICATION

Timken plummer block housings are designed for grease lubrication. They also can be modified to accommodate oil-bath and circulating oil- or oil/air-mist systems. Contact your Timken sales engineer for assistance. Please reference the installation guides on pages 101-105 for grease fill information.

Lubrication groove and holes may be provided in the bearing outer ring. This feature, designated by adding suffix W33 to the bearing number, should be specified whenever re-ordering bearings for pillow blocks. For bearings with lubrication groove and holes, it is suggested that the fresh lubricant is fed directly to the center of the bearing between the rows of rollers and distributed to the rest of the bearing. This helps ensure the used lubricant is purged from the bearing. Housed units feature multiple dimples that can be used to drill and tap for alternative grease fitting locations as needed.

SEALS

Timken® SNT plummer blocks are available with multiple sealing options. Each seal type incorporates specific features to meet your application needs. Table 29 compares the various features of each seal type.

DOUBLE-LIP SEALS

Double-lip seals are the most common seal design used with SNT plummer blocks. These are general all purpose elastomer seals that can protect in moderately contaminated environments. The seal is split into two 180 degree halves for easy installation. The seal element runs against the shaft surface and should be used in grease lubricated blocks. Contact your Timken sales engineer for double-lip seal availability when using cylindrical bore housings.

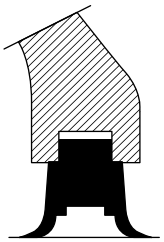

Fig. 26.
Double-lip seals.

V-RING SEALS

V-ring seals are a deflector type seal. They are made up of an elastomer V-ring seal element that rotates with the shaft and runs against the axial surface of a washer-type component that is retained in the block housing. As the V-ring element is a stretch fit onto the shaft, a rougher shaft surface is acceptable. This seal performs well in moderately contaminated environments with fine particulate.

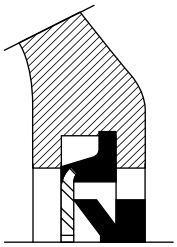

Fig. 27.
V-ring seals.

LABYRINTH SEALS

Labyrinth seals are made up of a single metal ring component that interconnects with the grooves in the housing to form a labyrinth gap. The inside diameter of the metal ring contains an O-ring that creates an interference fit with the shaft so that the ring will rotate with the shaft. Labyrinth seals can be used on high-speed applications and in moderately contaminated environments.

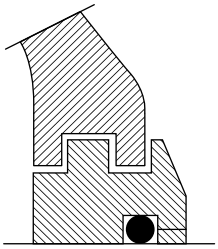

Fig. 28.
Labyrinth seals.

TACONITE SEALS

Taconite seals are a combination of both a labyrinth seal and V-ring seal. The labyrinth seal is made up of two separate metal ring components, inner and outer, that have interconnecting grooves that form a labyrinth gap. The outer metal ring component contains an O-ring on its outside diameter that provides an interference fit to the groove in the housing. The inside diameter of the inner metal ring component contains an O-ring that creates an interference fit with the shaft so that the ring will rotate with the shaft. This seal performs well in highly contaminated environments such as those seen in mining operations.

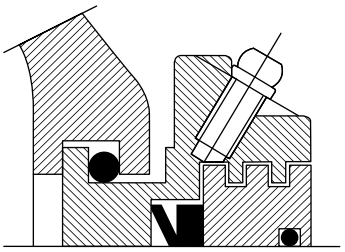

Fig. 29. Taconite seals.

TABLE 29. SEAL SELECTION

Seal Selection	Double-Lip (TSNG)	V-Ring (VR)	Labyrinth (LO)	Taconite (TA)
Material	NBR	NBR rubber + mild steel plate	Steel + NBR O-ring	Steel + NBR O-ring and V-ring
Temperature	-40° to 100° C (-40° to 212° F)	-40° to 100° C (-40° to 212° F)	-40° to 120° C (-40° to 248° F)	-40° to 100° C (-40° to 212° F)
Maximum speed	8 m/s	7 m/s	Same as bearing	7 m/s
Grease relubrication	Excellent	Excellent	Excellent	Excellent
Low friction	Good	Good	Excellent	Good
Resists dust/fine particles	Excellent	Excellent	Good	Excellent
Resists coarse particles	Good	Poor	Excellent	Excellent
Resists water	Good	Good	Fair	Excellent
Misalignment Shaft dia. ≤ 100 mm	1°	1.5°	0.3°	0.3°
Misalignment Shaft dia. > 100 mm	0.5°	1°	0.3°	0.3°

LOAD RATINGS AND LIFE

Load ratings for the spherical roller bearings that are used in plummer blocks are found in the dimension tables on pages 66 through 93. Life calculation formulas are found in the Engineering Manual (order no. 10424) on page 48 available on www.timken.com.

In addition to individual bearing selection, the ability of the plummer block to carry the operating load should be considered.

It should be noted that the load rating figures supplied in this catalog are applicable only when the load direction is generally toward the base of the plummer block. If the plummer block must be mounted so the load can be applied in any other direction, consult your Timken sales engineer.

INSTALLATION GUIDES

Following are installation guides for the SNT housings and the four seal types offered by Timken.

MOUNTING HOUSINGS WITH DOUBLE-LIP SEALS

Prior to starting installation, please read the following instructions. Contact a Timken sales engineer with any questions.

1. Clean the work area. Check the dimensional and form accuracy of the shaft seat. Note: The shaft roundness specification should be half of the O.D. tolerance. Ensure the shaft is free from burrs, gouges or other imperfections.
2. Ensure the surface roughness of the support surface Ra ≤ 12.5 µm. Ensure flatness is within 0.08 mm (base) and 0.125 mm aggregate (housing base and mounting surface).
3. Determine the position of the housing relative to the adapter sleeve on the shaft for bearings on adapter sleeves. For bearings that have to be relubricated from the side, the grease fitting in the housing cap should always face away from the locknut on the adapter sleeve. When housings are mounted on the end of a shaft, grease must be supplied at the end cover side. Make sure to position the base correctly because the cap only fits in one direction.
4. Position the housing on the support surface. Fit the attachment bolts but do not tighten them (fig. 30a).
5. Insert one seal half in each of the grooves in the housing base. Fill the space between the two sealing lips with grease (fig. 30b). If the housing is used on the end of a shaft, insert an end cover on one side instead of the seal half.
6. Mount the bearing on the shaft – either directly on a stepped shaft or using an adapter sleeve. Completely fill the bearing with grease. The remainder of the suggested grease quantity can be placed in the housing, equally distributed on each side of the bearing (See grease fill).
7. Install the shaft with bearing in the housing base (fig. 31a).
8. Put one locating ring on each side of the bearing for locating bearing arrangements (fig. 31b).
9. Carefully align the housing base. Use the vertical markings at the middle of the side faces and end faces of the housing base to help with this (fig. 32a). Then lightly tighten the attachment bolts (fig. 32b).
10. The remaining seal halves must be inserted in the seal grooves in the housing cap and the space between the sealing lips filled with grease.
11. Check the cap and base to see that they show the same identification. Install the cap onto the base (fig. 33a) and tighten the cap bolts to the torque specified in the table.
12. Fully tighten the attachment bolts in the housing base (fig. 33b). Suggested tightening torques are given in the table.

For torque table and grease fill information, please see page 105.

Fig. 30

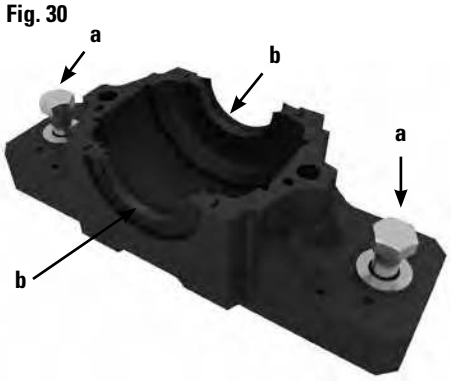

Fig. 31

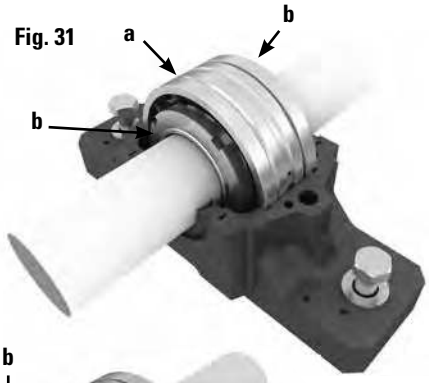

Fig. 32

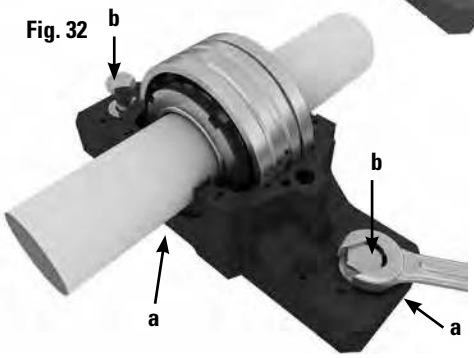

Fig. 33

MOUNTING HOUSINGS WITH LABYRINTH SEALS

Prior to starting installation, please read the following instructions. Contact a Timken sales engineer with any questions.

1. Clean the work area. Check the dimensional and form accuracy of the shaft seat. Note: The shaft roundness specification should be half of the O.D. tolerance. Ensure the shaft is free from burrs, gouges or other imperfections.
2. Ensure the surface roughness of the support surface Ra ≤ 12.5 µm. Ensure flatness is within 0.08 mm (base) and 0.125 mm aggregate (housing base and mounting surface).
3. For bearings on adapter sleeves, determine the position of the housing relative to the adapter sleeve on the shaft. For bearings that have to be relubricated from the side, the grease fitting in the housing cap should always face away from the locknut on the adapter sleeve. Grease should be supplied at the end cover side where housings are mounted on the end of a shaft. Be sure to position the base correctly since the cap only fits in one direction.
4. Position the housing on the support surface. Fit the attachment bolts but do not tighten them (fig. 34).
5. Mount the labyrinth ring on the shaft (fig. 35a).
6. Mount the bearing on the shaft – either directly on a stepped shaft or using an adapter sleeve (fig. 35b). Completely fill the bearing with grease. The remainder of the suggested grease quantity can be placed in the housing, equally distributed on each side of the bearing (See grease fill).
7. Mount the second labyrinth ring on the shaft in the correct position (fig. 35c). If the housing is to be used on the end of a shaft, omit the second labyrinth ring and insert an end cover in the housing base instead.
8. Install the shaft with bearing and labyrinth ring(s) in the housing base (fig. 36a).
9. Place one locating ring on each side of the bearing for locating bearing arrangements (fig. 36b).
10. Align the housing base. Use the vertical markings at the middle of the side faces and end faces of the housing base to help with this. Tighten the attachment bolts (fig. 36c).
11. Check the cap and base to see that they have the same identification. Install the cap onto the base (fig. 37a) and tighten the cap bolts to the torque specified in the table.
12. Fully tighten the attachment bolts in the housing base (fig. 37b). Suggested tightening torques are given in the table.
13. Insert the hollow O-ring cord of synthetic rubber in the grooves in the labyrinth rings. Use a screwdriver while turning the shaft, take care not to damage the seal (fig. 37c).

For torque table and grease fill information, please see page 105.

Fig. 34

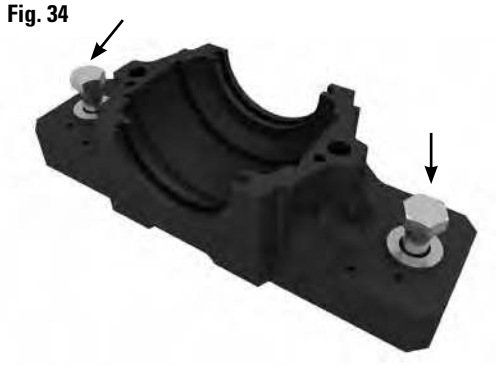

Fig. 35

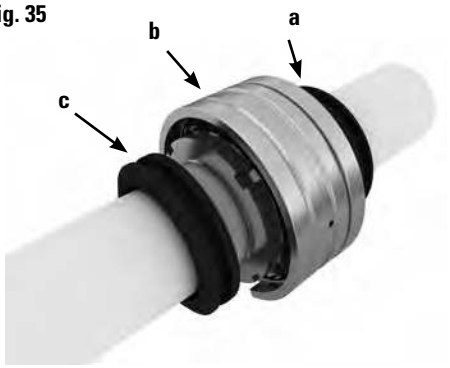

Fig. 36

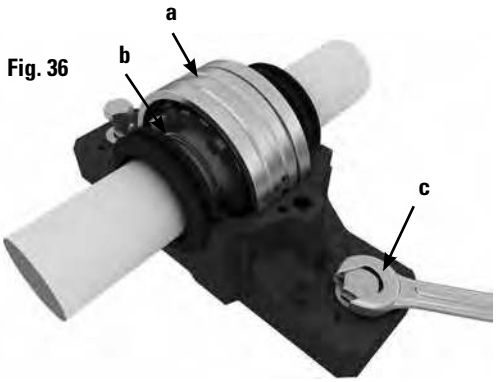

Fig. 37

MOUNTING HOUSINGS WITH V-RING SEALS

Prior to starting installation, please read the following instructions. Contact a Timken sales engineer with any questions.

1. Ensure the work area is clean. Check the dimensional and form accuracy of the shaft seat. Note: The shaft roundness specification should be half of the O.D. tolerance. Ensure the shaft is free from burrs, gouges or other imperfections.
2. Ensure the surface roughness of the support surface Ra ≤ 12.5 µm. Ensure flatness is within 0.08 mm (base) and 0.125 mm aggregate (housing base and mounting surface).
3. Determine the position of the housing relative to the adapter sleeve on the shaft for bearings on adapter sleeves. For bearings that have to be relubricated from the side, the grease fitting in the housing cap should always face away from the locknut on the adapter sleeve. Grease should be supplied at the end cover side where housings are mounted on the end of a shaft. Make sure to position the base correctly since the cap only fits in one direction.
4. Position the housing on the support surface. Fit the attachment bolts but do not tighten them (fig. 38).
5. Arrange the one V-ring with sealing washer on the shaft. The V-ring should be furthest away from the bearing and seal against the washer, i.e. the lip should point inward the washer (fig. 39a).
6. Mount the bearing on the shaft – either directly on a stepped shaft or using an adapter sleeve (fig. 39b). Completely fill the bearing with grease. The remainder of the suggested grease quantity can be placed in the housing, equally distributed on each side of the bearing (See grease fill).
7. Arrange the second sealing washer and V-ring on the shaft at the other side of the bearing (fig. 39c). If the housing is to be used on the end of a shaft, mount an end cover instead.
8. Install the shaft with bearing and sealing washers in the housing base (fig. 40a).
9. Put one locating ring on each side of the bearing for locating bearing arrangements.
10. Align the housing base. Use the vertical markings at the middle of the side faces and end faces of the housing base to help with this. Lightly tighten the attachment bolts (fig. 40b).
11. Check the cap and base to see that they bear the same identification. Install the cap onto the base and tighten the cap bolts to the torque marked in the table (fig. 41a).
12. Tighten the attachment bolts in the housing base (fig. 41b). Check the table for suggested tightening torques.
13. Coat the V-ring counterfaces on the sealing washers with grease (fig. 41c).
14. Finally, push the V-ring seals into their correct position. This can be done using a punch or screwdriver to push the seal as the shaft is turned, take care not to damage the seal (fig. 42).

For torque table and grease fill information, please see page 105.

Fig. 38

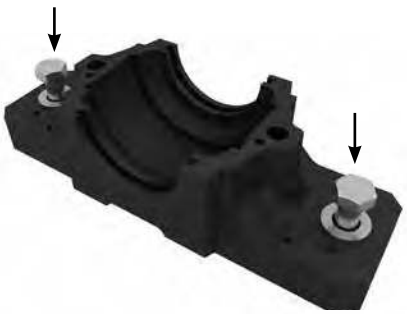

Fig. 39

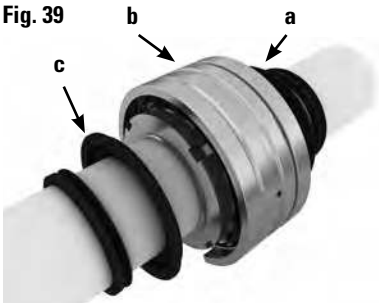

Fig. 40

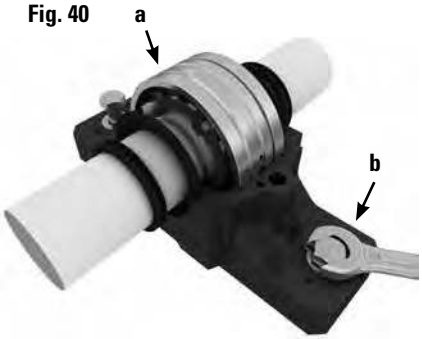

Fig. 41

Fig. 42

MOUNTING HOUSINGS WITH TACONITE SEALS

Prior to starting installation, please read the following instructions. Contact a Timken sales engineer with any questions.

1. Ensure the work area is clean. Check the dimensional and form accuracy of the shaft seat. Note: The shaft roundness specification should be half of the O.D. tolerance. Ensure the shaft is free from burrs, gouges or other imperfections.
2. Ensure the surface roughness of the support surface Ra ≤ 12.5 µm (500 µin). Ensure flatness is within 0.08 mm (base) and 0.125 mm aggregate (housing base and mounting surface).
3. For bearings on adapter sleeves, determine the position of the housing relative to the adapter sleeve on the shaft. For bearings that have to be relubricated from the side, the grease fitting in the housing cap should always face away from the locknut on the adapter sleeve. Where housings are mounted on the end of a shaft, grease should be supplied at the end cover side. Be sure to position the base correctly since the cap only fits in one direction.
4. Position the housing on the support surface. Fit the attachment bolts but do not tighten them (fig. 43).
5. Mount the first V-ring together with one labyrinth ring on the shaft in the correct position (fig. 44a). The lip of the V-ring should point towards the bearing. Place the split ring parts over the V-ring and labyrinth ring and screw them together (fig. 44b). The two parts of this split ring are not interchangeable. Check to see that they carry the same identification.
6. Mount the bearing on the shaft (fig. 44c) – either directly on a stepped shaft or using an adapter sleeve. Fill the bearing with grease. The remainder of the suggested grease quantity can be placed in the housing, equally distributed on each side of the bearing (See grease fill).
7. Mount the second seal according to step 5 (fig. 44d). If the housing is to be used on the end of a shaft, omit the second seal and insert an end cover in the housing base instead.
8. Use the hollow O-section cord to fix the labyrinth ring in position on the shaft (fig. 44c). Use a screwdriver to fit the cords while rotating the shaft, taking care not to damage the cords. Mount the O-rings on the seal outer diameter.
9. Install the shaft with bearing and seals in the housing base (fig. 45a) taking care that the hollow O-section cords are not damaged.
10. For locating bearing arrangements put one locating ring on each side of the bearing.
11. Carefully align the housing base. Use the vertical markings at the middle of the side faces and end faces of the housing base to help facilitate this (fig. 45b). Tighten the attachment bolts (fig. 45c).
12. Check the cap and base to make sure they have the same identification. Install the cap onto the base (fig. 46a) and tighten the cap bolts to the torque specified in the table.
13. Fully tighten the attachment bolts in the housing base (fig. 46b). Suggested tightening torques are given in the table.
14. Finally, before the first test run, rotate the shaft and supply grease via the fitting until it purges from the labyrinth rings (fig. 46c). Use the same grease for the bearing and the labyrinth rings.

Fig. 43

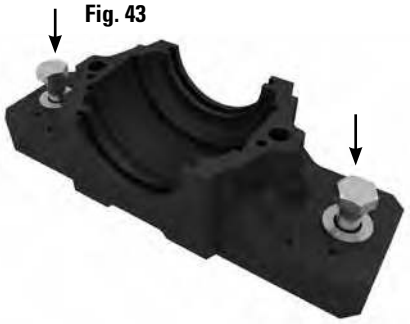

Fig. 44

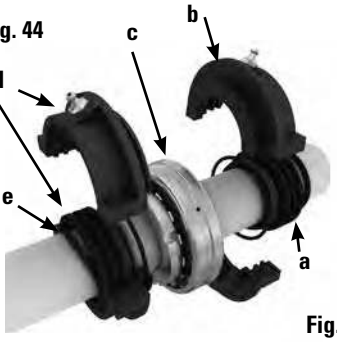

Fig. 45

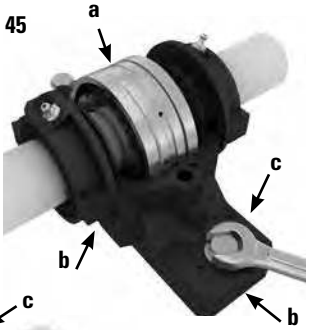

Fig. 46

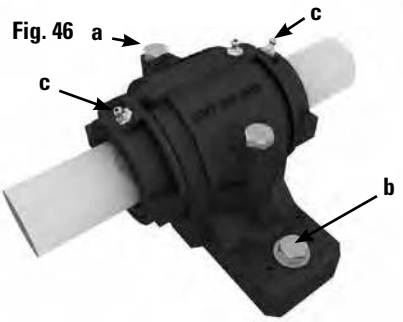

GREASE FILL

- For normal industrial applications, fill bearing void to 100 percent and housing void to 40–60 percent.
- For low-speed applications (less than 20 rpm), fill bearing void to 100 percent and housing void to 60–100 percent.
- For high-speed applications (above 70 percent of the bearings thermal speed rating), fill bearing void to 100 percent and housing void to 30–40 percent.

Contact a Timken sales engineer with any questions.

ADDITIONAL REFERENCE FOR BEARING MOUNTING

Timken Industrial Maintenance Manual (order no. 10213).

TABLE 30. TIGHTENING TORQUE – CAP BOLTS AND ATTACHMENT BOLTS

	Cap Bolts		Attachment Bolts	
Housing SNT	Bolt Size	Torque	Bolt Size	Torque
		Nm		Nm
505, 205	M10x40	**50**	M12	**80**
505-605-206-305	M10x40	**50**	M12	**80**
507-606, 207	M10x50	**50**	M12	**80**
508-607, 208-307	M10x50	**50**	M12	**80**
509, 209	M10x50	**50**	M12	**80**
510-60, 208-307	M10x55	**50**	M12	**80**
511-609, 211	M12x60	**80**	M16	**200**
512-610, 212	M12x60	**80**	M16	**200**
513-611,213	M12x65	**80**	M16	**200**
515-612, 215	M12x65	**80**	M16	**200**
516-613, 216	M12x70	**80**	M20	**385**
517, 217	M12x80	**80**	M20	**385**
518-615, 218	M16x19	**150**	M20	**385**
519-616	M16x19	**150**	M20	**385**
520-617	M20x200	**200**	M24	**665**
522-619	M20x100	**200**	M24	**665**
524-620	M20x110	**200**	M24	**665**
526	M24x130	**350**	M24	**665**
528	M24x130	**350**	M30	**1310**
530	M24x130	**350**	M30	**1310**
532	M24x130	**350**	M30	**1310**

⚠ WARNING

Failure to observe the following warnings could create a risk of death or serious injury.

Proper maintenance and handling practices are critical. Always follow installation instructions and maintain proper lubrication.

Overheated bearings can ignite explosive atmospheres. Special care must be taken to properly select, install, maintain, and lubricate housed unit bearings that are used in or near atmospheres that may contain explosive levels of combustible gases or accumulations of dust such as from grain, coal, or other combustible materials. Consult your equipment designer or supplier for installation and maintenance instructions.

If a hammer and bar are used for installation or removal of a part, use a mild steel bar (e.g., 1010 or 1020 grade). Mild steel bars are less likely to cause release of high speed fragments from the hammer or bar or the part being removed.

CAUTION

Failure to follow these cautions may result in property damage.

Do not use damaged housed units. The use of a damaged housed unit can result in equipment damage and/or injury.

This information is not intended to substitute for the specific recommendations of your equipment suppliers.

Every reasonable effort has been made to ensure the accuracy of the information contained in this writing, but no liability is accepted for errors, omissions or for any other reason.

TWO-BOLT SNT HOUSINGS FOR TAPERED BORE BEARINGS

- The basic numbers for ordering plummer block housings and components are listed in the table below.
- Each housing includes the housing cap, base and cap bolts.
- Housings shown are furnished in cast iron. If cast steel is desired, add the letter S to the alpha prefix (e.g., SNTS 518). If ductile iron is desired, add the letter D to the alpha prefix (e.g., SNTD 505).

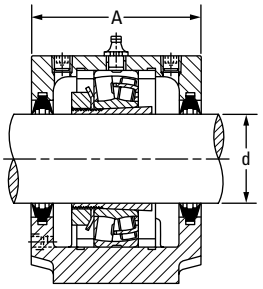

Double-Lip Seal

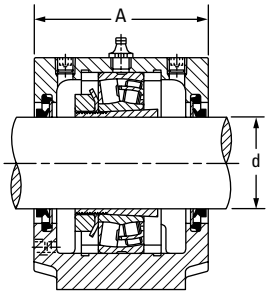

V-Ring Seal

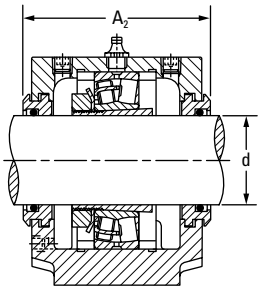

Labyrinth Seal

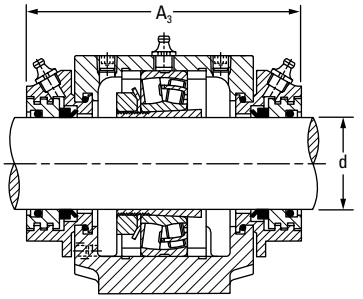

Taconite Seal

Shaft Dia. d	Housing	Bearing	Locating Rings[1] O.D. x Width	Adapter Sleeve[2]	Locknut[3]	Lockwasher[3]	Double-Lip Seal[4]	V-Ring Seal[4]	Labyrinth Seal[3]	Taconite Seal[3]	End Cover[3]
mm											
20	SNT 505 SNT 506-605	22205K 21305K	SR52X3.5 SR62X7.5	H305 H305	KM5 KM5	MB5 MB5	– TSNG605	VR505 VR605	LO505 LO605	TA505 TA605	EC505 EC506-605
25	SNT 506-605 SNT 507-606	22206K 21306K	SR62X6 SR72X7.5	H306 H306	KM6 KM6	MB6 MB6	– TSNG606	VR506 VR606	LO506 LO606	TA506 TA606	EC506-605 EC507-606
30	SNT 507-606 SNT 508-607	22207K 21307K	SR72X5.5 SR80X9	H307 H307	KM7 KM7	MB7 MB7	TSNG507 TSNG607	VR507 VR607	LO507 LO607	TA507 TA607	EC507-606 EC508-607
35	SNT 508-607 SNT 510-608 SNT 510-608	22208K 21308K 22308K	SR80X8 SR90X9 SR90X4	H308 H308 H2308	KM8 KM8 KM8	MB8 MB8 MB8	TSNG508 TSNG608 TSNG608	VR508 VR608 VR608	LO508 LO608 LO608	TA508 TA608 TA608	EC508-607 EC510-608 EC510-608
40	SNT 509 SNT 511-609 SNT 511-609	22209K 21309K 22309K	SR85X3.5 SR100X9.5 SR100X4	H309 H309 H2309	KM9 KM9 KM9	MB9 MB9 MB9	TSNG509 TSNG609 TSNG609	VR509 VR609 VR609	LO509 LO609 LO609	TA509 TA609 TA609	EC509 EC511-609 EC511-609
45	SNT 510-608 SNT 512-610 SNT 512-610	22210K 21310K 22310K	SR90X9 SR110X10.5 SR110X4	H310 H310 H2310	KM10 KM10 KM10	MB10 MB10 MB10	TSNG510 TSNG610 TSNG610	VR510 VR610 VR610	LO510 LO610 LO610	TA510 TA610 TA610	EC510-608 EC512-610 EC512-610
50	SNT 511-609 SNT 513-611 SNT 513-611	22211K 21311K 22311K	SR100X9.5 SR120X11 SR120X4	H311 H311 H2311	KM11 KM11 KM11	MB11 MB11 MB11	TSNG511 TSNG611 TSNG611	VR511 VR611 VR611	LO511 LO611 LO611	TA511 TA611 TA611	EC511-609 EC513-611 EC513-611

[1]Locating rings = minimum two required for fixed position, sold one piece per box.
[2]Adapter sleeve assembly includes one sleeve, one locknut and one lockwasher.
[3]Labyrinth, taconite seal, end cover, locknut, lockwasher, sold one piece per box.
[4]Double-lip and V-ring seals sold two pieces per box.

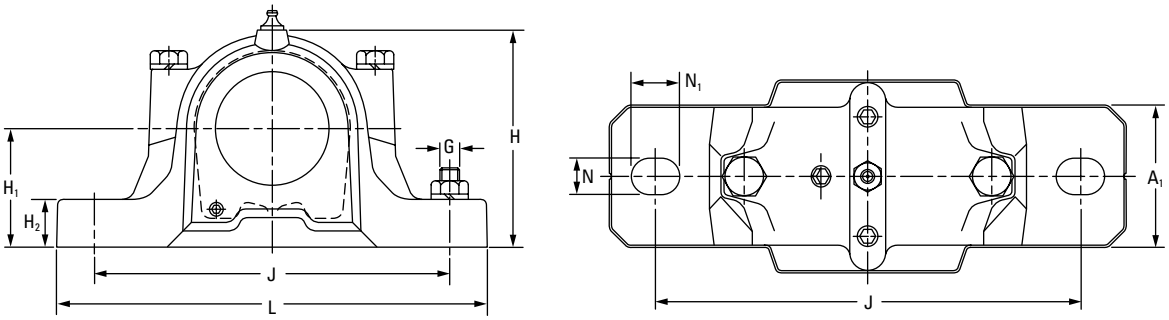

Housing Dimensions													2 Bolts Req'd	Housing Mass
A	A_1	A_2	A_3	H	H_1	H_2	J min	J	J max	L	N	N_1	G	
mm	mm	mm	mm	mm	mm	mm	mm	mm	mm	mm	mm	mm	mm	kg
67	46	80	130	74	40	19	123	130	137	165	15	20	12	1.5
77	52	89	135	89	50	22	143	150	157	185	15	20	12	2.0
77	52	89	135	89	50	22	143	150	157	185	15	20	12	2.0
82	52	94	140	93	50	22	143	150	157	185	15	20	12	2.2
82	52	94	140	93	50	22	143	150	157	185	15	20	12	2.2
85	60	97	145	108	60	25	165	170	175	205	15	20	12	2.9
85	60	97	145	108	60	25	165	170	175	205	15	20	12	2.9
90	60	102	150	113	60	25	165	170	175	205	15	20	12	3.2
90	60	102	150	113	60	25	165	170	175	205	15	20	12	3.2
85	60	97	150	109	60	25	165	170	175	205	15	20	12	2.9
95	70	107	155	128	70	28	205	210	215	255	18	24	16	4.5
95	70	107	155	128	70	28	205	210	215	255	18	24	16	4.5
90	60	102	150	113	60	25	165	170	175	205	15	20	12	3.2
105	70	117	165	134	70	30	205	210	215	255	18	24	16	5.3
105	70	117	165	134	70	30	205	210	215	255	18	24	16	5.3
95	70	107	155	128	70	28	205	210	215	255	18	24	16	4.5
110	80	122	170	150	80	30	224	230	236	275	18	24	16	6.6
110	80	122	170	150	80	30	224	230	236	275	18	24	16	6.6

Continued on next page.

TWO-BOLT SNT HOUSINGS FOR TAPERED BORE BEARINGS *– continued*

- The basic numbers for ordering plummer block housings and components are listed in the table below.
- Each housing includes the housing cap, base and cap bolts.
- Housings shown are furnished in cast iron. If cast steel is desired, add the letter S to the alpha prefix (e.g., SNTS 518). If ductile iron is desired, add the letter D to the alpha prefix (e.g., SNTD 505).

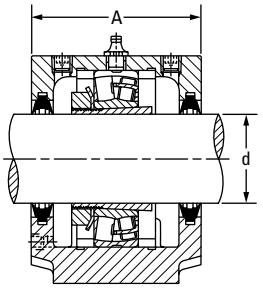

Double-Lip Seal

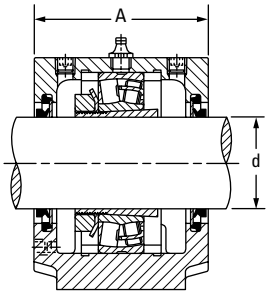

V-Ring Seal

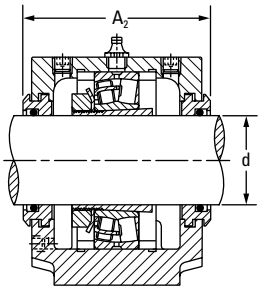

Labyrinth Seal

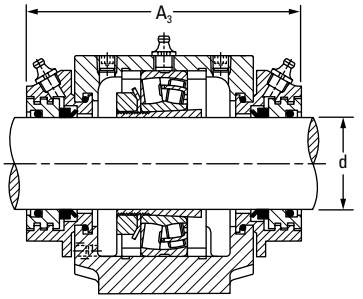

Taconite Seal

Continued from previous page.

Shaft Dia. d	Housing	Bearing	Locating Rings[1] O.D. x Width	Adapter Sleeve[2]	Locknut[3]	Lockwasher[3]	Double-Lip Seal[4]	V-Ring Seal[4]	Labyrinth Seal[3]	Taconite Seal[3]	End Cover[3]
mm											
55	SNT 512-610 SNT 515-612 SNT 515-612	22212K 21312K 22312K	SR110X10 SR130X12.5 SR130X5	H312 H312 H2312	KM12 KM12 KM12	MB12 MB12 MB12	TSNG512 TSNG612 TSNG612	VR512 VR612 VR612	LO512 LO612 LO612	TA512 TA612 TA612	EC512-610 EC515-612 EC515-612
60	SNT 513-611 SNT 516-613 SNT 516-613	22213K 21313K 22313K	SR120X10 SR140X12.5 SR140X5	H313 H313 H2313	KM13 KM13 KM13	MB13 MB13 MB13	TSNG513 TSNG613 TSNG613	VR513 VR613 VR613	LO513 LO613 LO613	TA513 TA613 TA613	EC513-611 EC516-613 EC516-613
65	SNT 515-612 SNT 518-615 SNT 518-615	22215K 21315K 22315K	SR130X12.5 SR160X14 SR160X5	H315 H315 H2315	KM15 KM15 KM15	MB15 MB15 MB15	TSNG515 TSNG615 TSNG615	VR515 VR615 VR615	LO515 LO615 LO615	TA515 TA615 TA615	EC515-612 EC518-615 EC518-615
70	SNT 516-613 SNT 519-616 SNT 519-616	22216K 21316K 22316K	SR140X12.5 SR170X14.5 SR170X5	H316 H316 H2316	KM16 KM16 KM16	MB16 MB16 MB16	TSNG516 TSNG616 TSNG616	VR516 VR616 VR616	LO516 LO616 LO616	TA516 TA616 TA616	EC516-613 EC519-616 EC519-616
75	SNT 517 SNT 520-617 SNT 520-617	22217K 21317K 22317K	SR150X12.5 SR180X14.5 SR180X5	H317 H317 H2317	KM17 KM17 KM17	MB17 MB17 MB17	TSNG517 TSNG617 TSNG617	VR517 VR617 VR617	LO517 LO617 LO617	TA517 TA617 TA617	EC517 EC520-617 EC520-617
80	SNT 518-615 SNT 518-615	22218K 23218K	SR160X12.5 SR160X6.25	H318 H2318	KM18 KM18	MB18 MB18	TSNG518 TSNG518	VR518 VR518	LO518 LO518	TA518 TA518	EC518-615 EC518-615
85	SNT 519-616 SNT 522-619 SNT 522-619	22219K 21319K 22319K	SR170X12.5 SR200X17.5 SR200X6.5	H319 H319 H2319	KM19 KM19 KM19	MB19 MB19 MB19	TSNG519 TSNG619 TSNG619	VR519 VR619 VR619	LO519 LO619 LO619	TA519 TA619 TA619	EC519-616 EC522-619 EC522-619

[1]Locating rings = minimum two required for fixed position, sold one piece per box.
[2]Adapter sleeve assembly includes one sleeve, one locknut and one lockwasher.
[3]Labyrinth, taconite seal, end cover, locknut, lockwasher, sold one piece per box.
[4]Double-lip and V-ring seals sold two pieces per box.

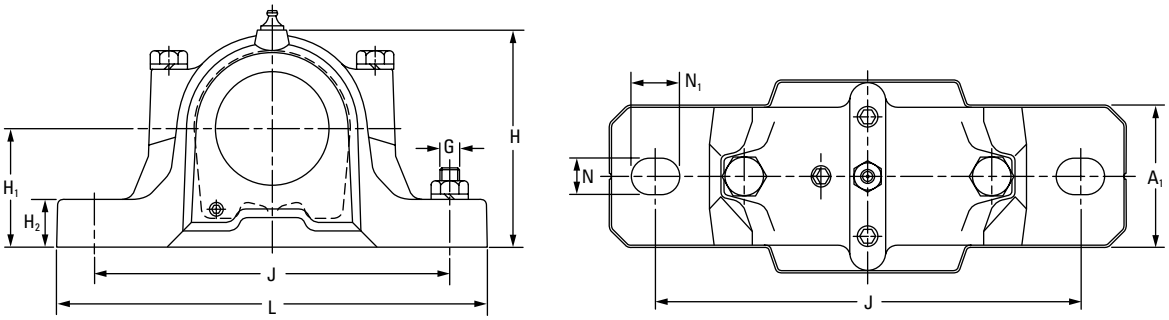

Housing Dimensions													2 Bolts Req'd	Housing Mass
A	A_1	A_2	A_3	H	H_1	H_2	J min	J	J max	L	N	N_1	G	
mm	mm	mm	mm	mm	mm	mm	mm	mm	mm	mm	mm	mm	mm	kg
105	70	117	165	134	70	30	205	210	215	255	18	24	16	5.3
115	80	127	175	156	80	30	222	230	238	280	18	24	16	6.9
115	80	127	175	156	80	30	222	230	238	280	18	24	16	6.9
110	80	122	170	150	80	30	224	230	236	275	18	24	16	6.6
120	90	138	180	177	95	32	252	260	268	315	22	28	20	9.7
120	90	138	180	177	95	32	252	260	268	315	22	28	20	9.7
115	80	127	175	156	80	30	222	230	238	280	18	24	16	6.9
140	100	158	225	194	100	35	285	290	295	345	22	28	20	13.1
140	100	158	225	194	100	35	285	290	295	345	22	28	20	13.1
120	90	138	180	177	95	32	252	260	268	315	22	28	20	9.7
145	100	163	220	212	112	35	285	290	295	345	22	28	20	14.0
145	100	163	220	212	112	35	285	290	295	345	22	28	20	14.0
125	90	143	210	183	95	32	252	260	268	320	22	28	20	10.4
160	110	178	235	218	112	40	314	320	326	380	26	32	24	17.6
160	110	178	235	218	112	40	314	320	326	380	26	32	24	17.6
140	100	158	225	194	100	35	285	290	295	345	22	28	20	13.1
140	100	158	225	194	100	35	285	290	295	345	22	28	20	13.1
145	100	163	220	212	112	35	285	290	295	345	22	28	20	14.0
175	120	191	250	242	125	45	356	344	350	410	32	26	24	22.3
175	120	191	250	242	125	45	344	350	356	410	26	32	24	22.3

Continued on next page.

TWO-BOLT SNT HOUSINGS FOR TAPERED BORE BEARINGS *– continued*

- The basic numbers for ordering plummer block housings and components are listed in the table below.
- Each housing includes the housing cap, base and cap bolts.
- Housings shown are furnished in cast iron. If cast steel is desired, add the letter S to the alpha prefix (e.g., SNTS 518). If ductile iron is desired, add the letter D to the alpha prefix (e.g., SNTD 505).

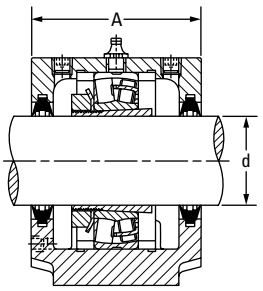

Double-Lip Seal

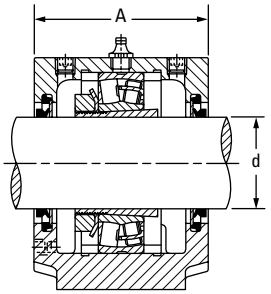

V-Ring Seal

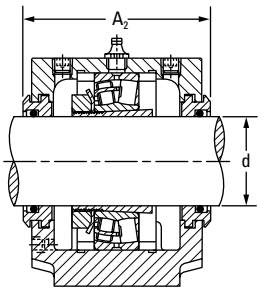

Labyrinth Seal

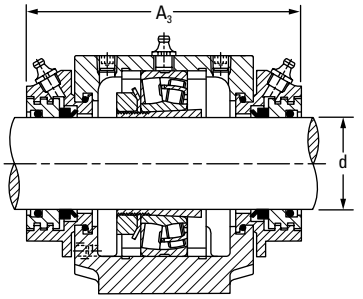

Taconite Seal

Continued from previous page.

Shaft Dia. d	Housing	Bearing	Locating Rings[1] O.D. x Width	Adapter Sleeve[2]	Locknut[3]	Lockwasher[3]	Double-Lip Seal[4]	V-Ring Seal[4]	Labyrinth Seal[3]	Taconite Seal[3]	End Cover[3]
mm											
90	SNT 520-617 SNT 520-617 SNT 524-620 SNT 524-620	22220K 23220K 21320K 22320K	SR180X12 SR180X4.85 SR215X19.5 SR215X6.5	H320 H2320 H2320 H2320	KM20 KM20 KM20 KM20	MB20 MB20 MB20 MB20	TSNG520 TSNG520 TSNG620 TSNG620	VR520 VR520 VR620 VR620	LO520 LO520 LO620 LO620	TA520 TA520 TA620 TA620	EC520-617 EC520-617 EC524-620 EC524-620
100	SNT 522-619 SNT 522-619	22222K 23222K	SR200X13.5 SR200X5.1	H322 H2322	KM22 KM22	MB22 MB22	TSNG522 TSNG522	VR522 VR522	LO522 LO522	TA522 TA522	EC522-619 EC522-619
110	SNT 524-620 SNT 524-620	22224K 23224K	SR215X14 SR215X5	H3124 H2324	KM24 KM24	MB24 MB24	TSNG524 TSNG524	VR524 VR524	LO524 LO524	TA524 TA524	EC524-620 EC524-620
115	SNT 526 SNT 526	22226K 23226K	SR230X13 SR230X5	H3126 H2326	KM26 KM26	MB26 MB26	TSNG526 TSNG526	VR526 VR526	LO526 LO526	TA526 TA526	EC526 EC526
125	SNT 528 SNT 528	22228K 23228K	SR250X15 SR250X5	H3128 H2328	KM28 KM28	MB28 MB28	TSNG528 TSNG528	VR528 VR528	LO528 LO528	TA528 TA528	EC528 EC528
135	SNT 530 SNT 530	22230K 23230K	SR270X16.5 SR270X5	H3130 H2330	KM30 KM30	MB30 MB30	TSNG530 TSNG530	VR530 VR530	LO530 LO530	TA530 TA530	EC530 EC530
140	SNT 532 SNT 532	22232K 23232K	SR290X17 SR290X5	H3132 H2332	KM32 KM32	MB32 MB32	TSNG532 TSNG532	VR532 VR532	LO532 LO532	TA532 TA532	EC532 EC532

[1]Locating rings = minimum two required for fixed position, sold one piece per box.
[2]Adapter sleeve assembly includes one sleeve, one locknut and one lockwasher.
[3]Labyrinth, taconite seal, end cover, locknut, lockwasher, sold one piece per box.
[4]Double-lip and V-ring seals sold two pieces per box.

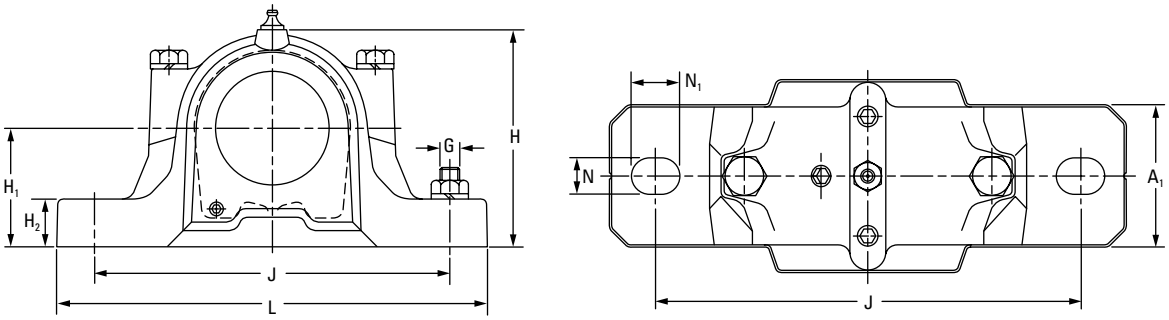

Housing Dimensions													2 Bolts Req'd	Housing Mass
A	A_1	A_2	A_3	H	H_1	H_2	J min	J	J max	L	N	N_1	G	
mm	mm	mm	mm	mm	mm	mm	mm	mm	mm	mm	mm	mm	mm	kg
160	110	178	235	218	112	40	314	320	326	380	26	32	24	17.6
160	110	178	235	218	112	40	314	320	326	380	26	32	24	17.6
185	120	199	260	271	140	45	344	350	356	410	26	32	24	26.5
185	120	199	260	271	140	45	344	350	356	410	26	32	24	26.5
175	120	191	250	242	125	45	344	350	356	410	26	32	24	22.3
175	120	191	250	242	125	45	344	350	356	410	26	32	24	22.3
185	120	199	260	271	140	45	344	350	356	410	26	32	24	26.5
185	120	199	260	271	140	45	344	350	356	410	26	32	24	26.5
190	130	208	265	290	150	50	373	380	387	445	28	35	24	34.0
190	130	208	265	290	150	50	373	380	387	445	28	35	24	34.0
205	150	223	285	302	150	50	413	420	427	500	35	42	30	39.0
205	150	223	285	302	150	50	413	420	427	500	35	42	30	39.0
220	160	241	295	323	160	60	443	450	457	530	35	42	30	48.0
220	160	241	295	323	160	60	443	450	457	530	35	42	30	48.0
235	160	254	315	344	170	60	463	470	477	550	35	42	30	54.5
235	160	254	315	344	170	60	463	470	477	550	35	42	30	54.5

FOUR-BOLT FSNT HOUSINGS FOR TAPERED BORE BEARINGS

- The basic numbers for ordering plummer block housings and components are listed in the table below.
- Each housing includes the housing cap, base and cap bolts.
- Assemblies shown are furnished in cast iron. If cast steel is desired, add the letter S to the alpha prefix (e.g., FSNTS 518). If ductile iron is desired, add the letter D to the alpha prefix (e.g., FSNTD 505).

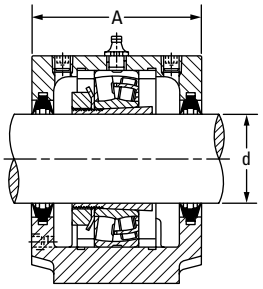

Double-Lip Seal

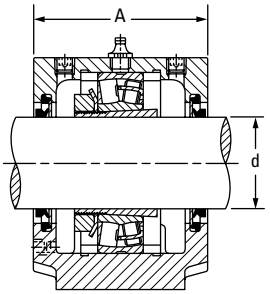

V-Ring Seal

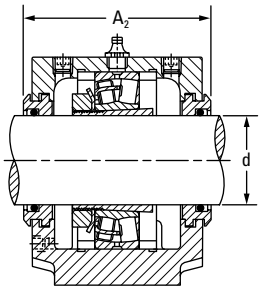

Labyrinth Seal

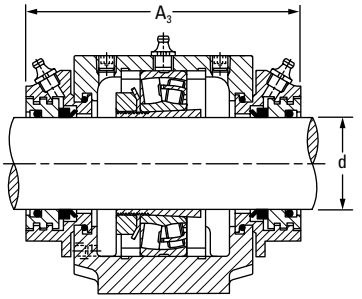

Taconite Seal

Shaft Dia. d	Housing	Bearing	Locating Rings[1] O.D. x Width	Adapter Sleeve[2]	Locknut[3]	Lockwasher[3]	Double-Lip Seal[4]	V-Ring Seal[4]	Labyrinth Seal[3]	Taconite Seal[3]	End Cover[3]
mm											
40	FSNT 511-609 FSNT 511-609	21309K 22309K	SR100X9.5 SR100X4	H309 H2309	KM9 KM9	MB9 MB9	TSNG609 TSNG609	VR609 VR609	LO609 LO609	TA609 TA609	EC511-609 EC511-609
45	FSNT 512-610 FSNT 512-610	21310K 22310K	SR110X10.5 SR110X4	H310 H2310	KM10 KM10	MB10 MB10	TSNG610 TSNG610	VR610 VR610	LO610 LO610	TA610 TA610	EC512-610 EC512-610
50	FSNT 511-609 FSNT 513-611 FSNT 513-611	22211K 21311K 22311K	SR100X9.5 SR120X11 SR120X4	H311 H311 H2311	KM11 KM11 KM11	MB11 MB11 MB11	TSNG511 TSNG611 TSNG611	VR511 VR611 VR611	LO511 LO611 LO611	TA511 TA611 TA611	EC511-609 EC513-611 EC513-611
55	FSNT 512-610 FSNT 515-612 FSNT 515-612	22212K 21312K 22312K	SR110X10 SR130X12.5 SR130X5	H312 H312 H2312	KM12 KM12 KM12	MB12 MB12 MB12	TSNG512 TSNG612 TSNG612	VR512 VR612 VR612	LO512 LO612 LO612	TA512 TA612 TA612	EC512-610 EC515-612 EC515-612
60	FSNT 513-611 FSNT 516-613 FSNT 516-613	22213K 21313K 22313K	SR120X10 SR140X12.5 SR140X5	H313 H313 H2313	KM13 KM13 KM13	MB13 MB13 MB13	TSNG513 TSNG613 TSNG613	VR513 VR613 VR613	LO513 LO613 LO613	TA513 TA613 TA613	EC513-611 EC516-613 EC516-613
65	FSNT 515-612 FSNT 518-615 FSNT 518-615	22215K 21315K 22315K	SR130X12.5 SR160X14 SR160X5	H315 H315 H2315	KM15 KM15 KM15	MB15 MB15 MB15	TSNG515 TSNG615 TSNG615	VR515 VR615 VR615	LO515 LO615 LO615	TA515 TA615 TA615	EC515-612 EC518-615 EC518-615
70	FSNT 516-613 FSNT 519-616 FSNT 519-616	22216K 21316K 22316K	SR140X12.5 SR170X14.5 SR170X5	H316 H316 H2316	KM16 KM16 KM16	MB16 MB16 MB16	TSNG516 TSNG616 TSNG616	VR516 VR616 VR616	LO516 LO616 LO616	TA516 TA616 TA616	EC516-613 EC519-616 EC519-616
75	FSNT 517 FSNT 520-617 FSNT 520-617	22217K 21317K 22317K	SR150X12.5 SR180X14.5 SR180X5	H317 H317 H2317	KM17 KM17 KM17	MB17 MB17 MB17	TSNG517 TSNG617 TSNG617	VR517 VR617 VR617	LO517 LO617 LO617	TA517 TA617 TA617	EC517 EC520-617 EC520-617

[1]Locating rings = minimum two required for fixed position, sold one piece per box.
[2]Adapter sleeve assembly includes one sleeve, one locknut and one lockwasher.
[3]Labyrinth, taconite seal, end cover, locknut, lockwasher, sold one piece per box.
[4]Double-lip and V-ring seals sold two pieces per box.

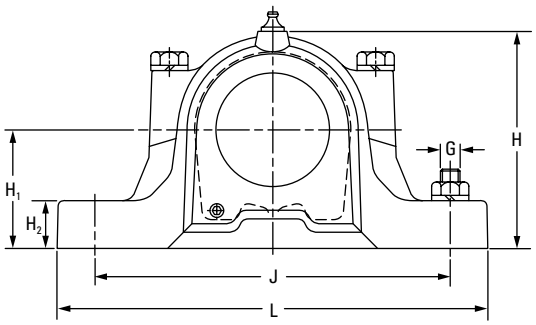

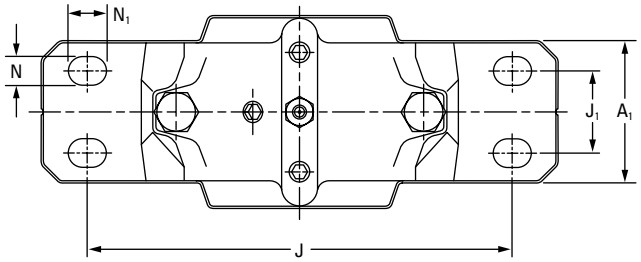

Housing Dimensions													4 Bolts Req'd	Housing Mass
A	A_1	A_2	A_3	H	H_1	H_2	J	J_1	J_2	L	N	N_1	G	
mm	mm	mm	mm	mm	mm	mm	mm	mm	mm	mm	mm	mm	mm	kg
95	70	107	155	128	70	28	210	35	234	255	15	20	12	4.5
95	70	107	155	128	70	28	210	35	234	255	15	20	12	4.5
105	70	117	165	134	70	30	210	35	234	255	15	20	12	5.3
105	70	117	165	134	70	30	210	35	234	255	15	20	12	5.3
95	70	107	155	128	70	28	210	35	234	255	15	20	12	4.5
110	80	122	170	150	80	30	230	40	252	275	15	20	12	6.6
110	80	122	170	150	80	30	230	40	252	275	15	20	12	6.6
105	70	117	165	134	70	30	210	35	234	255	15	20	12	5.3
115	80	127	175	156	80	30	230	40	257	280	15	20	12	6.9
115	80	127	175	156	80	30	230	40	257	280	15	20	12	6.9
110	80	122	170	150	80	30	230	40	252	275	15	20	12	6.6
120	90	138	180	177	95	32	260	50	288	315	18	24	16	9.7
120	90	138	180	177	95	32	260	50	288	315	18	24	16	9.7
115	80	127	175	156	80	30	230	40	257	280	15	20	12	6.9
140	100	158	225	194	100	35	290	50	317	345	18	24	16	13.1
140	100	158	225	194	100	35	290	50	317	345	18	24	16	13.1
120	90	138	180	177	95	32	260	50	288	315	18	24	16	9.7
145	100	163	220	212	112	35	290	50	317	345	18	24	16	14.0
145	100	163	220	212	112	35	290	50	317	345	18	24	16	14.0
125	90	143	210	183	95	32	260	50	292	320	18	24	16	10.4
160	110	178	235	218	112	40	320	60	348	380	18	24	16	17.6
160	110	178	235	218	112	40	320	60	348	380	18	24	16	17.6

Continued on next page.

FOUR-BOLT FSNT HOUSINGS FOR TAPERED BORE BEARINGS – *continued*

- The basic numbers for ordering plummer block housings and components are listed in the table below.
- Each housing includes the housing cap, base and cap bolts.
- Assemblies shown are furnished in cast iron. If cast steel is desired, add the letter S to the alpha prefix (e.g., FSNTS 518). If ductile iron is desired, add the letter D to the alpha prefix (e.g., FSNTD 505).

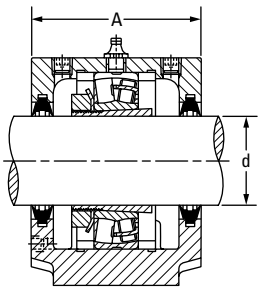

Double-Lip Seal

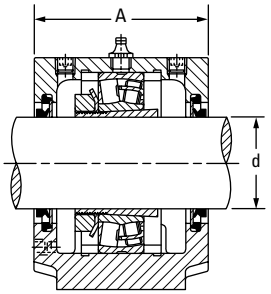

V-Ring Seal

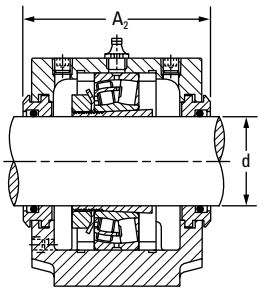

Labyrinth Seal

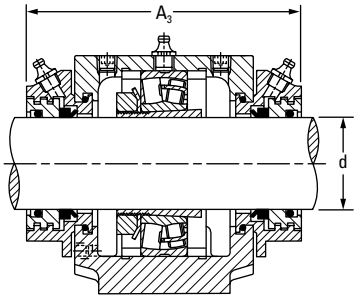

Taconite Seal

Continued from previous page.

Shaft Dia. d	Housing	Bearing	Locating Rings[1] O.D. x Width	Adapter Sleeve[2]	Locknut[3]	Lockwasher[3]	Double-Lip Seal[4]	V-Ring Seal[4]	Labyrinth Seal[3]	Taconite Seal[3]	End Cover[3]
mm											
80	FSNT 518-615 FSNT 518-615	22218K 23218K	SR160X12.5 SR160X6.25	H318 H2318	KM18 KM18	MB18 MB18	TSNG518 TSNG518	VR518 VR518	LO518 LO518	TA518 TA518	EC518-615 EC518-615
85	FSNT 519-616 FSNT 522-619 FSNT 522-619	22219K 21319K 22319K	SR170X12.5 SR200X17.5 SR200X6.5	H319 H319 H2319	KM19 KM19 KM19	MB19 MB19 MB19	TSNG519 TSNG619 TSNG619	VR519 VR619 VR619	LO519 LO619 LO619	TA519 TA619 TA619	EC519-616 EC522-619 EC522-619
90	FSNT 520-617 FSNT 520-617 FSNT 524-620 FSNT 524-620	22220K 23220K 21320K 22320K	SR180X12 SR180X4.85 SR215X19.5 SR215X6.5	H320 H2320 H320 H2320	KM20 KM20 KM20 KM20	MB20 MB20 MB20 MB20	TSNG520 TSNG520 TSNG620 TSNG620	VR520 VR520 VR620 VR620	LO520 LO520 LO620 LO620	TA520 TA520 TA620 TA620	EC520-617 EC520-617 EC524-620 EC524-620
100	FSNT 522-619 FSNT 522-619	22222K 23222K	SR200X13.5 SR200X5.1	H322 H2322	KM22 KM22	MB22 MB22	TSNG522 TSNG522	VR522 VR522	LO522 LO522	TA522 TA522	EC522-619 EC522-619
110	FSNT 524-620 FSNT 524-620	22224K 23224K	SR215X14 SR215X5	H3124 H2324	KM24 KM24	MB24 MB24	TSNG524 TSNG524	VR524 VR524	LO524 LO524	TA524 TA524	EC524-620 EC524-620
115	FSNT 526 FSNT 526	22226K 23226K	SR230X13 SR230X5	H3126 H2326	KM26 KM26	MB26 MB26	TSNG526 TSNG526	VR526 VR526	LO526 LO526	TA526 TA526	EC526 EC526
125	FSNT 528 FSNT 528	22228K 23228K	SR250X15 SR250X5	H3128 H2328	KM28 KM28	MB28 MB28	TSNG528 TSNG528	VR528 VR528	LO528 LO528	TA528 TA528	EC528 EC528
135	FSNT 530 FSNT 530	22230K 23230K	SR270X16.5 SR270X5	H3130 H2330	KM30 KM30	MB30 MB30	TSNG530 TSNG530	VR530 VR530	LO530 LO530	TA530 TA530	EC530 EC530
140	FSNT 532 FSNT 532	22232K 23232K	SR290X17 SR290X5	H3132 H2332	KM32 KM32	MB32 MB32	TSNG532 TSNG532	VR532 VR532	LO532 LO532	TA532 TA532	EC532 EC532

[1]Locating rings = minimum two required for fixed position, sold one piece per box.
[2]Adapter sleeve assembly includes one sleeve, one locknut and one lockwasher.
[3]Labyrinth, taconite seal, end cover, locknut, lockwasher, sold one piece per box.
[4]Double-lip and V-ring seals sold two pieces per box.

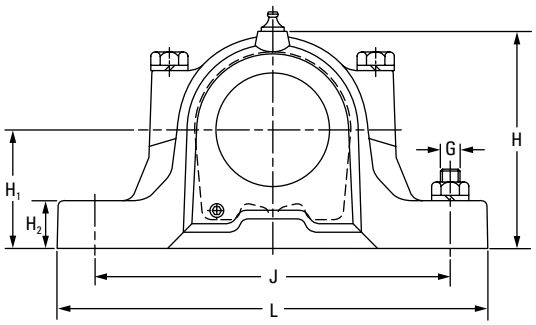

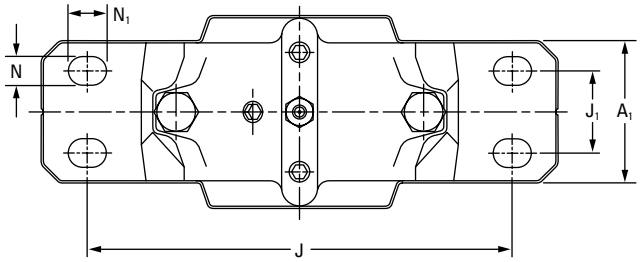

Housing Dimensions													4 Bolts Req'd	Housing Mass
A	A_1	A_2	A_3	H	H_1	H_2	J	J_1	J_2	L	N	N_1	G	
mm	mm	mm	mm	mm	mm	mm	mm	mm	mm	mm	mm	mm	mm	kg
140	100	158	225	194	100	35	290	50	317	345	18	24	16	13.1
140	100	158	225	194	100	35	290	50	317	345	18	24	16	13.1
145	100	163	220	212	112	35	290	50	317	345	18	24	16	14.0
175	120	191	250	242	125	45	350	70	378	410	18	24	16	22.3
175	120	191	250	242	125	45	350	70	378	410	18	24	16	22.3
160	110	178	235	218	112	40	320	60	348	380	18	24	16	17.6
160	110	178	235	218	112	40	320	60	348	380	18	24	16	17.6
185	120	199	260	271	140	45	350	70	378	410	18	24	16	26.5
185	120	199	260	271	140	45	350	70	378	410	18	24	16	26.5
175	120	191	250	242	125	45	350	70	378	410	18	24	16	22.3
175	120	191	250	242	125	45	350	70	378	410	18	24	16	22.3
185	120	199	260	271	140	45	350	70	378	410	18	24	16	26.5
185	120	199	260	271	140	45	350	70	378	410	18	24	16	26.5
190	130	208	265	290	150	50	380	70	414	445	22	28	20	34.0
190	130	208	265	290	150	50	380	70	414	445	22	28	20	34.0
205	150	223	285	302	150	50	420	80	458	500	26	32	24	39.0
205	150	223	285	302	150	50	420	80	458	500	26	32	24	39.0
220	160	241	295	323	160	60	450	90	486	530	26	32	24	48.0
220	160	241	295	323	160	60	450	90	486	530	26	32	24	48.0
235	160	254	315	344	170	60	470	90	506	550	26	32	24	54.5
235	160	254	315	344	170	60	470	90	506	550	26	32	24	54.5

TWO-BOLT SNT HOUSINGS FOR CYLINDRICAL BORE BEARINGS

- The basic numbers for ordering plummer block housings and components are listed in the table below.
- Each housing includes the housing cap, base and cap bolts.
- Assemblies shown are furnished in cast iron. If cast steel is desired, add the letter S to the alpha prefix (e.g., FSNTS 518).

If ductile iron is desired, add the letter D to the alpha prefix (e.g., FSNTD 505).

- Seal sleeve for d_a shaft to be supplied by customer and should have same O.D. as d_b.

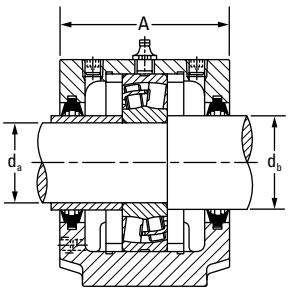

Double-Lip Seal

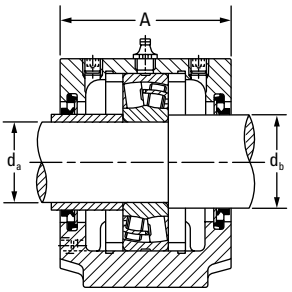

V-Ring Seal

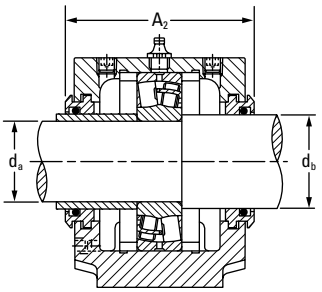

Labyrinth Seal

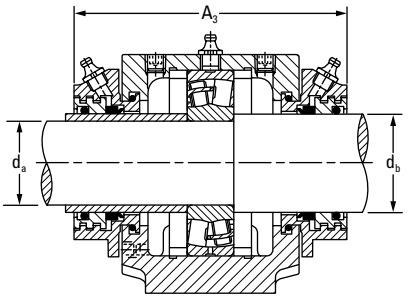

Taconite Seal

Shaft Dia. d_a mm	Shaft Dia. d_b mm	Housing	Bearing	Locating Rings[1] O.D. x Width	Double-Lip Seal[2]	V-Ring Seal[2]	Labyrinth Seal[3]	Taconite Seal[3]	End Cover[3]
25	30	SNT 205 SNT 206-305	22205 21305	SR52X3.5 SR62X7.5	TSNG205 TSNG305	– VR305	LO205 LO305	TA205 TA305	EC506-605 EC507-606
30	35	SNT 206-305 SNT 507-606	22206 21306	SR62X6 SR72X7.5	TSNG206 TSNG306	VR206 VR306	LO206 LO306	TA206 TA306	EC507-606 EC507-606
35	45	SNT 207 SNT 208-307	22207 21307	SR72X5.5 SR80X9	TSNG207 TSNG307	VR207 VR307	LO207 LO307	TA207 TA307	EC509 EC510-608
40	50	SNT 208-307 SNT 510-608 SNT 510-608	22208 21308 22308	SR80X8 SR90X9 SR90X4	TSNG208 TSNG308 TSNG308	VR208 VR308 VR308	LO208 LO308 LO308	TA208 TA308 TA308	EC510-608 EC510-608 EC510-608
45	55	SNT 209 SNT 511-609 SNT 511-609	22209 21309 22309	SR85X3.5 SR100X9.5 SR100X4	TSNG209 TSNG309 TSNG309	VR209 VR309 VR309	LO209 LO309 LO309	TA209 TA309 TA309	EC511-609 EC511-609 EC511-609
50	60	SNT 210 SNT 512-610 SNT 512-610	22210 21310 22310	SR90X9 SR110X10.5 SR110X4	TSNG210 TSNG310 TSNG310	VR210 VR310 VR310	LO210 LO310 LO310	TA210 TA310 TA310	EC512-610 EC512-610 EC512-610
55	65	SNT 211 SNT 513-611 SNT 513-611	22211 21311 22311	SR100X9.5 SR120X11 SR120X4	TSNG211 TSNG311 TSNG311	VR211 VR311 VR311	LO211 LO311 LO311	TA211 TA311 TA311	EC513-611 EC513-611 EC513-611
60	70	SNT 212 SNT 515-612 SNT 515-612	22212 21312 22312	SR110X10 SR130X12.5 SR130X5	TSNG212 TSNG312 TSNG312	VR212 VR312 VR312	LO212 LO312 LO312	TA212 TA312 TA312	EC515-612 EC515-612 EC515-612
65	75	SNT 213 SNT 516-613 SNT 516-613	22213 21313 22313	SR120X10 SR140X12.5 SR140X5	TSNG213 TSNG313 TSNG313	VR213 VR313 VR313	LO213 LO313 LO313	TA213 TA313 TA313	EC516-613 EC516-613 EC516-613
70	80	SNT 517 SNT 517	22314 21314	SR150X5 SR150X13	TSNG314 TSNG314	VR314 VR314	LO314 LO314	TA314 TA314	EC517 EC517

[1]Locating rings = minimum two required for fixed position, sold one piece per box.
[2]Double-lip and V-ring seals sold two pieces per box. Consult your Timken sales engineer for double-lip seal availability.
[3]Labyrinth, taconite seal and end cover, sold one piece per box.

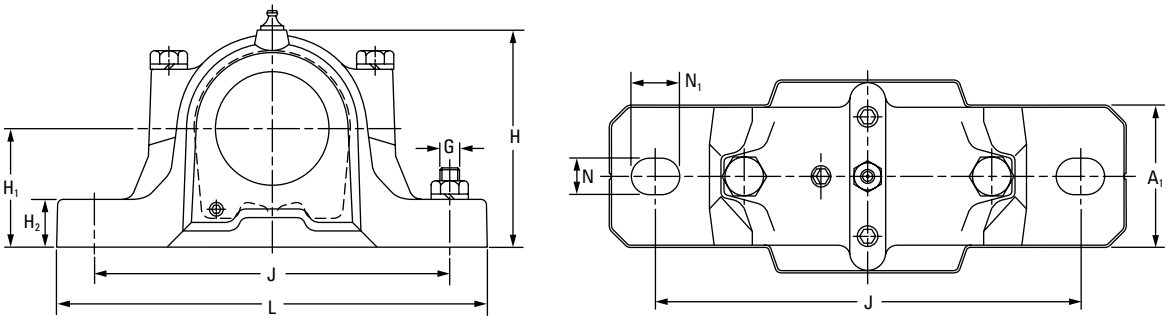

Housing Dimensions													2 Bolts Req'd	Housing Mass
A	A_1	A_2	A_3	H	H_1	H_2	J min	J	J max	L	N	N_1	G	
mm	mm	mm	mm	mm	mm	mm	mm	mm	mm	mm	mm	mm	mm	kg
67	46	90	140	74	40	19	123	130	137	165	15	20	12	1.5
77	52	89	150	89	50	22	143	150	157	185	15	20	12	2.0
77	52	89	150	89	50	22	143	150	157	185	15	20	12	2.0
82	52	94	140	93	50	22	143	150	157	185	15	20	12	2.2
82	52	96	155	93	50	22	143	150	157	185	15	20	12	2.2
85	60	99	160	108	60	25	165	170	175	205	15	20	12	2.9
85	60	99	160	108	60	25	165	170	175	205	15	20	12	2.9
90	60	102	150	113	60	25	165	170	175	205	15	20	12	3.2
90	60	102	150	113	60	25	165	170	175	205	15	20	12	3.2
85	60	97	160	109	60	25	165	170	175	205	15	20	12	2.9
95	70	107	155	128	70	28	205	210	215	255	18	24	16	4.5
95	70	107	155	128	70	28	205	210	215	255	18	24	16	4.5
90	60	102	165	113	60	25	165	170	175	205	15	20	12	3.2
105	70	117	165	134	70	30	205	210	215	255	18	24	16	5.3
105	70	117	165	134	70	30	205	210	215	255	18	24	16	5.3
95	70	107	170	128	70	28	205	210	215	255	18	24	16	4.5
110	80	122	170	150	80	30	224	230	236	275	18	24	16	6.6
110	80	122	170	150	80	30	224	230	236	275	18	24	16	6.6
105	70	117	180	134	70	30	205	210	215	255	18	24	16	5.2
115	80	127	175	156	80	30	222	230	238	280	18	24	16	6.9
115	80	127	175	156	80	30	222	230	238	280	18	24	16	6.9
110	80	128	190	149	80	30	222	230	238	275	18	24	16	6.6
120	90	138	180	177	95	32	252	260	268	315	22	28	20	9.7
120	90	138	180	177	95	32	252	260	268	315	22	28	20	9.7
125	90	143	210	183	95	32	252	260	268	320	22	28	20	10.4
125	90	143	210	183	95	32	252	260	268	320	22	28	20	10.4

Continued on next page.

TWO-BOLT SNT HOUSINGS FOR CYLINDRICAL BORE BEARINGS – *continued*

- The basic numbers for ordering plummer block housings and components are listed in the table below.
- Each housing includes the housing cap, base and cap bolts.
- Assemblies shown are furnished in cast iron. If cast steel is desired, add the letter S to the alpha prefix (e.g., FSNTS 518). If ductile iron is desired, add the letter D to the alpha prefix (e.g., FSNTD 505).
- Seal sleeve for d_a shaft to be supplied by customer and should have same O.D. as d_b.

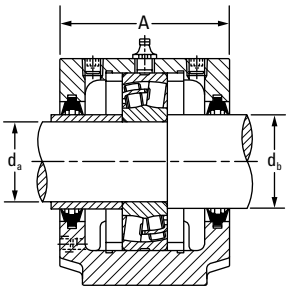

Double-Lip Seal

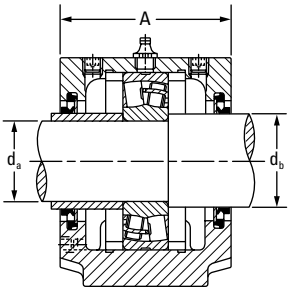

V-Ring Seal

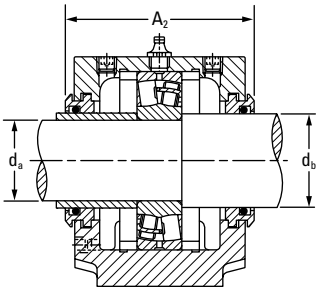

Labyrinth Seal

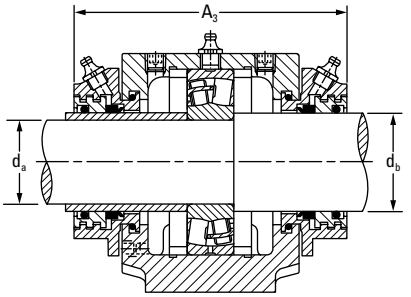

Taconite Seal

Continued from previous page.

Shaft Dia. d_a mm	Shaft Dia. d_b mm	Housing	Bearing	Locating Rings[1] O.D. x Width	Double-Lip Seal[2]	V-Ring Seal[2]	Labyrinth Seal[3]	Taconite Seal[3]	End Cover[3]
75	**85**	SNT 215 SNT 518-615 SNT 518-615	22215 21315 22315	SR130X12.5 SR160X14 SR160X5	TSNG215 TSNG315 TSNG315	VR215 VR315 VR315	LO215 LO315 LO315	TA215 TA315 TA315	EC518-615 EC518-615 EC518-615
80	**90**	SNT 216 SNT 519-616 SNT 519-616	22216 21316 22316	SR140X10 SR170X14.5 SR170X5	TSNG216 TSNG316 TSNG316	VR216 VR316 VR316	LO216 LO316 LO316	TA216 TA316 TA316	EC216 EC519-616 EC519-616
85	**95**	SNT 217 SNT 520-617 SNT 520-617	22217 21317 22317	SR150X12.5 SR180X14.5 SR180X5	TSNG217 TSNG317 TSNG317	VR217 VR317 VR317	LO217 LO317 LO317	TA217 TA317 TA317	EC217 EC520-617 EC520-617
90	**100**	SNT 218 SNT 218	22218 23218	SR160X12.5 SR160X6.25	TSNG218 TSNG218	VR218 VR218	LO218 LO218	TA218 TA218	EC218 EC218
95	**110**	SNT 522-619 SNT 522-619	21319 22319	SR200X17.5 SR200X6.5	TSNG319 TSNG319	VR319 VR319	LO319 LO319	TA319 TA319	EC522-619 EC522-619
100	**115**	SNT 520-617 SNT 520-617 SNT 524-620 SNT 524-620	22220 23220 21320 22320	SR180X12 SR180X4.85 SR215X19.5 SR215X6.5	TSNG220 TSNG220 TSNG320 TSNG320	VR220 VR220 VR320 VR320	LO220 LO220 LO320 LO320	TA220 TA220 TA320 TA320	EC520-617 EC520-617 EC524-620 EC524-620
110	**125**	SNT 522-619 SNT 522-619	22222 23222	SR200X13.5 SR200X5.1	TSNG222 TSNG222	VR222 VR222	LO222 LO222	TA222 TA222	EC522-619 EC522-619
120	**135**	SNT 524-620 SNT 524-620	22224 23224	SR215X14 SR215X5	TSNG224 TSNG224	VR224 VR224	LO224 LO224	TA224 TA224	EC 524-620 EC 524-620
130	**145**	SNT 526 SNT 526	22226 23226	SR230X13 SR230X5	TSNG226 TSNG226	VR226 VR226	LO226 LO226	TA226 TA226	EC526 EC526
140	**155**	SNT 528 SNT 528	22228 23228	SR250X15 SR250X5	TSNG228 TSNG228	VR228 VR228	LO228 LO228	TA228 TA228	EC528 EC528
150	**165**	SNT 530 SNT 530	22230 23230	SR270X16.5 SR270X5	TSNG230 TSNG230	VR230 VR230	LO230 LO230	TA230 TA230	EC530 EC530
160	**175**	SNT 532 SNT 532	22232 23232	SR290X17 SR290X5	TSNG232 TSNG232	VR232 VR232	LO232 LO232	TA232 TA232	EC532 EC532

[1]Locating rings = minimum two required for fixed position, sold one piece per box.
[2]Double-lip and V-ring seals sold two pieces per box. Consult your Timken sales engineer for double-lip seal availability.
[3]Labyrinth, taconite seal and end cover, sold one piece per box.

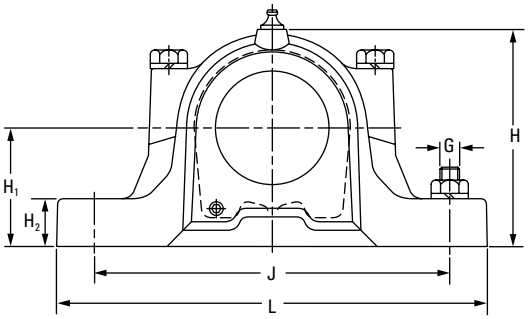

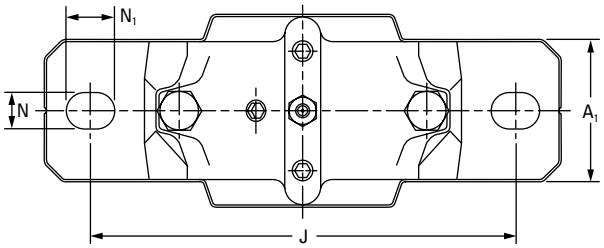

Housing Dimensions													2 Bolts Req'd	Housing Mass
A	A_1	A_2	A_3	H	H_1	H_2	J min	J	J max	L	N	N_1	G	
mm	mm	mm	mm	mm	mm	mm	mm	mm	mm	mm	mm	mm	mm	kg
115	80	133	195	155	80	30	222	230	238	280	18	24	16	6.9
140	100	158	225	194	100	35	285	290	295	345	22	28	20	13.1
140	100	158	225	194	100	35	285	290	295	345	22	28	20	13.1
120	90	138	200	177	95	32	252	260	268	315	22	28	20	9.7
145	100	163	220	212	112	35	285	290	295	345	22	28	20	14.0
145	100	163	220	212	112	35	285	290	295	345	22	28	20	14.0
125	90	143	205	183	95	32	252	260	268	320	22	28	20	10.4
160	110	178	235	218	112	40	314	320	326	380	26	32	24	17.6
160	110	178	235	218	112	40	314	320	326	380	26	32	24	17.6
140	100	158	220	194	100	35	285	290	295	345	22	28	20	13.1
140	100	158	220	194	100	35	285	290	295	345	22	28	20	13.1
175	120	191	250	242	125	45	344	350	356	410	26	32	24	22.3
175	120	191	250	242	125	45	344	350	356	410	26	32	24	22.3
160	110	178	235	218	112	40	314	320	326	380	26	32	24	17.6
160	110	178	235	218	112	40	314	320	326	380	26	32	24	17.6
185	120	199	260	271	140	45	344	350	356	410	26	32	24	26.5
185	120	199	260	271	140	45	344	350	356	410	26	32	24	26.5
175	120	191	250	242	125	45	344	350	356	410	26	32	24	22.3
175	120	191	250	242	125	45	344	350	356	410	26	32	24	22.3
185	120	199	260	271	140	45	344	350	356	410	26	32	24	26.5
185	120	199	260	271	140	45	344	350	356	410	26	32	24	26.5
190	130	208	265	290	150	50	373	380	387	445	28	35	24	34.0
190	130	208	265	290	150	50	373	380	387	445	28	35	24	34.0
205	150	223	285	302	150	50	413	420	427	500	35	42	30	39.0
205	150	223	285	302	150	50	413	420	427	500	35	42	30	39.0
220	160	241	295	323	160	60	443	450	457	530	35	42	30	48.0
220	160	241	295	323	160	60	443	450	457	530	35	42	30	48.0
235	160	254	315	344	170	60	463	470	477	550	35	42	30	54.5
235	160	254	315	344	170	60	463	470	477	550	35	42	30	54.5

FOUR-BOLT FSNT HOUSINGS FOR CYLINDRICAL BORE BEARINGS

- The basic numbers for ordering plummer block housings and components are listed in the table below.
- Each housing includes the housing cap, base and cap bolts.
- Assemblies shown are furnished in cast iron. If cast steel is desired, add the letter S to the alpha prefix (e.g., FSNTS 518). If ductile iron is desired, add the letter D to the alpha prefix (e.g., FSNTD 505).
- Seal sleeve for d_a shaft to be supplied by customer and should have same O.D. as d_b.

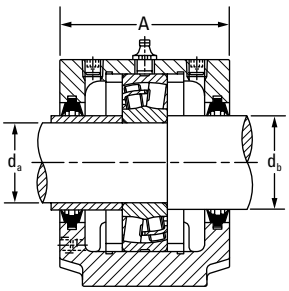

Double-Lip Seal

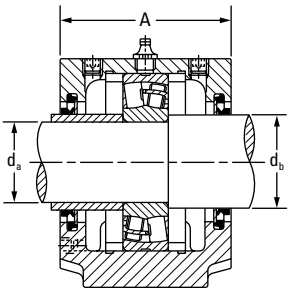

V-Ring Seal

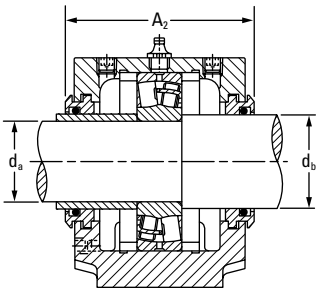

Labyrinth Seal

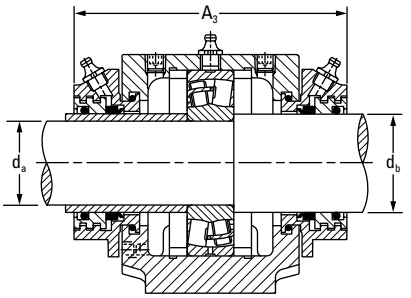

Taconite Seal

Shaft Dia. d_a mm	Shaft Dia. d_b mm	Housing	Bearing	Locating Rings[1] O.D. x Width	Double-Lip Seal[2]	V-Ring Seal[2]	Labyrinth Seal[3]	Taconite Seal[3]	End Cover[3]
35	45	FSNT 208-307	21307	SR80X9	TSNG307	VR307	LO307	TA307	EC510-608
40	50	FSNT 208-307 FSNT 510-608 FSNT 510-608	22208 21308 22308	SR80X8 SR90X9 SR90X4	TSNG208 TSNG308 TSNG308	VR208 VR308 VR308	LO208 LO308 LO308	TA208 TA308 TA308	EC510-608 EC510-608 EC510-608
45	55	FSNT 209 FSNT 511-609 FSNT 511-609	22209 21309 22309	SR85X3.5 SR100X9.5 SR100X4	TSNG209 TSNG309 TSNG309	VR209 VR309 VR309	LO209 LO309 LO309	TA209 TA309 TA309	EC511-609 EC511-609 EC511-609
50	60	FSNT 210 FSNT 512-610 FSNT 512-610	22210 21310 22310	SR90X9 SR110X10.5 SR110X 4	TSNG210 TSNG310 TSNG310	VR210 VR310 VR310	LO210 LO310 LO310	TA210 TA310 TA310	EC512-610 EC512-610 EC512-610
55	65	FSNT 211 FSNT 513-611 FSNT 513-611	22211 21311 22311	SR100X9.5 SR120X11 SR120X4	TSNG211 TSNG311 TSNG311	VR211 VR311 VR311	LO211 LO311 LO311	TA211 TA311 TA311	EC513-611 EC513-611 EC513-611
60	70	FSNT 212 FSNT 515-612 FSNT 515-612	22212 21312 22312	SR110X10 SR130X12.5 SR130X5	TSNG212 TSNG312 TSNG312	VR212 VR312 VR312	LO212 LO312 LO312	TA212 TA312 TA312	EC515-612 EC515-612 EC515-612
65	75	FSNT 213 FSNT 516-613 FSNT 516-613	22213 21313 22313	SR120X10 SR140X12.5 SR140X5	TSNG213 TSNG313 TSNG313	VR213 VR313 VR313	LO213 LO313 LO313	TA213 TA313 TA313	EC516-613 EC516-613 EC516-613
70	80	FSNT 517 FSNT 517	22314 21314	SR150X5 SR150X13	TSNG314 TSNG314	VR314 VR314	LO314 LO314	TA314 TA314	EC517 EC517
75	85	FSNT 215 FSNT 518-615 FSNT 518-615	22215 21315 22315	SR130X12.5 SR160X14 SR160X5	TSNG215 TSNG315 TSNG315	VR215 VR315 VR315	LO215 LO315 LO315	TA215 TA315 TA315	EC518-615 EC518-615 EC518-615
80	90	FSNT 216 FSNT 519-616 FSNT 519-616	22216 21316 22316	SR140X10 SR170X14.5 SR170X5	TSNG216 TSNG316 TSNG316	VR216 VR316 VR316	LO216 LO316 LO316	TA216 TA316 TA316	EC216 EC519-616 EC519-616

[1]Locating rings = minimum two required for fixed position, sold one piece per box.
[2]Double-lip and V-ring seal sold two pieces per box. Consult with your Timken sales engineer for double-lip seal availability.
[3]Labyrinth, taconite seal and end cover, sold one piece per box.

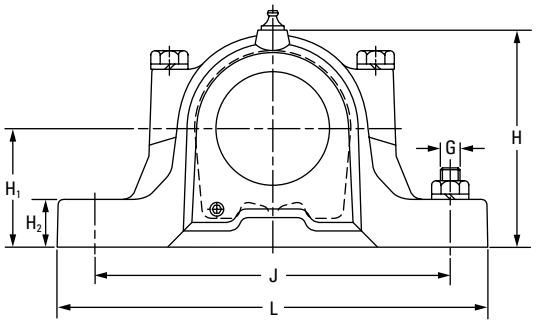

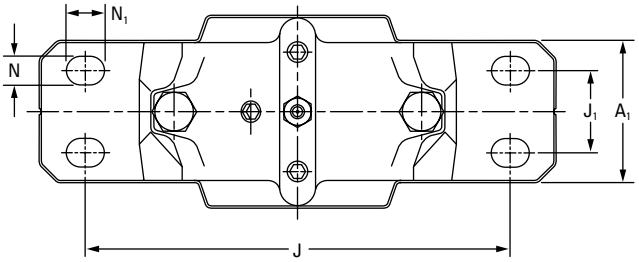

Housing Dimensions													4 Bolts Req'd	Housing Mass
A	A_1	A_2	A_3	H	H_1	H_2	J	J_1	J_2	L	N	N_1	G	
mm	mm	mm	mm	mm	mm	mm	mm	mm		mm	mm	mm	mm	kg
85	60	99	160	108	60	25	160	34	–	205	11	–	12	2.9
85	60	99	160	108	60	25	160	34	–	205	11	–	12	2.9
90	60	102	150	113	60	25	160	34	–	205	–	11	12	3.2
90	60	102	150	113	60	25	160	34	–	205	–	11	12	3.2
85	60	97	160	109	60	25	160	34	–	205	11	–	12	2.9
95	70	107	155	128	70	28	210	35	–	255	15	20	16	4.5
95	70	107	155	128	70	28	210	35	–	255	15	20	16	4.5
90	60	102	165	113	60	25	160	34	–	205	11	–	12	3.2
105	70	117	165	134	70	30	210	35	–	255	15	20	16	5.3
105	70	117	165	134	70	30	210	35	–	255	15	20	16	5.3
95	70	107	170	128	70	28	200	40	–	255	14	–	16	4.5
110	80	122	170	150	80	30	230	40	–	275	15	20	16	6.6
110	80	122	170	150	80	30	230	40	–	275	15	20	16	6.6
105	70	117	180	134	70	30	200	40	–	255	14	–	16	5.2
115	80	127	175	156	80	30	230	40	–	280	15	20	16	6.9
115	80	127	175	156	80	30	230	40	–	280	15	20	16	6.9
110	80	128	190	149	80	30	220	48	–	275	14	–	16	6.6
120	90	138	180	177	95	32	260	50	–	315	18	24	20	9.7
120	90	138	180	177	95	32	260	50	–	315	18	24	20	9.7
125	90	143	210	183	95	32	260	50	–	320	18	24	20	10.4
125	90	143	210	183	95	32	260	50	–	320	18	24	20	10.4
115	80	133	195	155	80	30	220	48	–	280	14	–	16	6.9
140	100	158	225	194	100	35	290	50	–	345	18	24	20	13.1
140	100	158	225	194	100	35	290	50	–	345	18	24	20	13.1
120	90	138	200	177	95	32	252	52	–	315	18	–	20	9.7
145	100	163	220	212	112	35	290	50	–	345	18	24	20	14.0
145	100	163	220	212	112	35	290	50	–	345	18	24	20	14.0

Continued on next page.

FOUR-BOLT FSNT HOUSINGS FOR CYLINDRICAL BORE BEARINGS – *continued*

- The basic numbers for ordering plummer block housings and components are listed in the table below.
- Each housing includes the housing cap, base and cap bolts.
- Assemblies shown are furnished in cast iron. If cast steel is desired, add the letter S to the alpha prefix (e.g., FSNTS 518). If ductile iron is desired, add the letter D to the alpha prefix (e.g., FSNTD 505).
- Seal sleeve for d_a shaft to be supplied by customer and should have same O.D. as d_b.

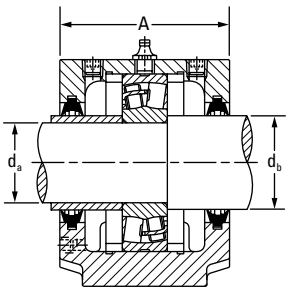

Double-Lip Seal

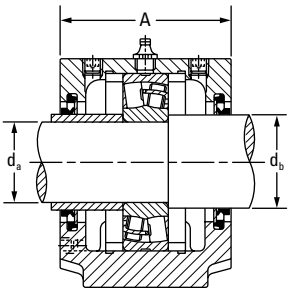

V-Ring Seal

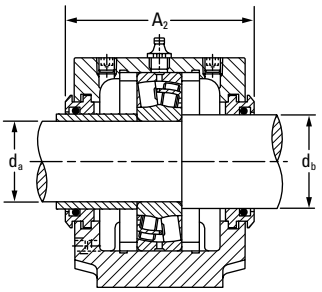

Labyrinth Seal

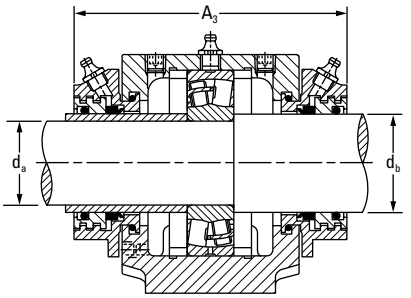

Taconite Seal

Continued from previous page.

Shaft Dia. d_a mm	Shaft Dia. d_b mm	Housing	Bearing	Locating Rings[1] O.D. x Width	Double-Lip Seal[2]	V-Ring Seal[2]	Labyrinth Seal[3]	Taconite Seal[3]	End Cover[3]
85	95	FSNT 217 FSNT 520-617 FSNT 520-617	22217 21317 22317	SR150X12.5 SR180X14.5 SR180X5	TSNG217 TSNG317 TSNG317	VR217 VR317 VR317	LO217 LO317 LO317	TA217 TA317 TA317	EC217 EC520-617 EC520-617
90	100	FSNT 218 FSNT 218	22218 23218	SR160X12.5 SR160X6.25	TSNG218 TSNG218	VR218 VR218	LO218 LO218	TA218 TA218	EC218 EC218
95	110	FSNT 522-619 FSNT 522-619	21319 22319	SR200X17.5 SR200X6.5	TSNG319 TSNG319	VR319 VR319	LO319 LO319	TA319 TA319	EC522-619 EC522-619
100	115	FSNT 520-617 FSNT 520-617 FSNT 524-620 FSNT 524-620	22220 23220 21320 22320	SR180X12 SR180X4.85 SR215X19.5 SR215X6.5	TSNG220 TSNG220 TSNG320 TSNG320	VR220 VR220 VR320 VR320	LO220 LO220 LO320 LO320	TA220 TA220 TA320 TA320	EC520-617 EC520-617 EC524-620 EC524-620
110	125	FSNT 522-619 FSNT 522-619	22222 23222	SR200X13.5 SR200X5.1	TSNG222 TSNG222	VR222 VR222	LO222 LO222	TA222 TA222	EC522-619 EC522-619
120	135	FSNT 524-620 FSNT 524-620	22224 23224	SR215X14 SR215X5	TSNG224 TSNG224	VR224 VR224	LO224 LO224	TA224 TA224	EC 524-620 EC 524-620
130	145	FSNT 526 FSNT 526	22226 23226	SR230X13 SR230X5	TSNG226 TSNG226	VR226 VR226	LO226 LO226	TA226 TA226	EC526 EC526
140	155	FSNT 528 FSNT 528	22228 23228	SR250X15 SR250X5	TSNG228 TSNG228	VR228 VR228	LO228 LO228	TA228 TA228	EC528 EC528
150	165	FSNT 530 FSNT 530	22230 23230	SR270X16.5 SR270X5	TSNG230 TSNG230	VR230 VR230	LO230 LO230	TA230 TA230	EC530 EC530
160	175	FSNT 532 FSNT 532	22232 23232	SR290X17 SR290X5	TSNG232 TSNG232	VR232 VR232	LO232 LO232	TA232 TA232	EC532 EC532

[1]Locating rings = minimum two required for fixed position, sold one piece per box.
[2]Double-lip and V-ring seal sold two pieces per box. Consult with your Timken sales engineer for double-lip seal availability.
[3]Labyrinth, taconite seal and end cover, sold one piece per box.

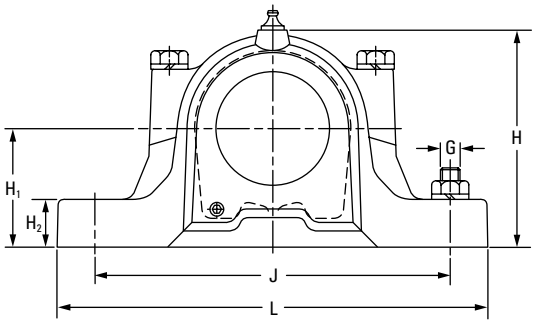

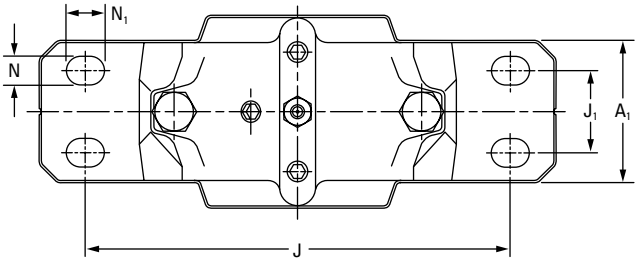

Housing Dimensions													4 Bolts Req'd	Housing Mass
A	A_1	A_2	A_3	H	H_1	H_2	J	J_1	J_2	L	N	N_1	G	
mm	mm	mm	mm	mm	mm	mm	mm	mm		mm	mm	mm	mm	kg
125	90	143	205	183	95	32	252	52	–	320	18	–	20	10.4
160	110	178	235	218	112	40	320	60	–	380	18	24	24	17.6
160	110	178	235	218	112	40	320	60	–	380	18	24	24	17.6
140	100	158	220	194	100	35	280	58	–	345	18	–	20	13.1
140	100	158	220	194	100	35	280	58	–	345	18	–	20	13.1
175	120	191	250	242	125	45	350	70	–	410	18	24	24	22.3
175	120	191	250	242	125	45	350	70	–	410	18	24	24	22.3
160	110	178	235	218	112	40	320	60	–	380	18	24	24	17.6
160	110	178	235	218	112	40	320	60	–	380	18	24	24	17.6
185	120	199	260	271	140	45	350	70	–	410	18	24	24	26.5
185	120	199	260	271	140	45	350	70	–	410	18	24	24	26.5
175	120	191	250	242	125	45	350	70	–	410	18	24	24	22.3
175	120	191	250	242	125	45	350	70	–	410	18	24	24	22.3
185	120	199	260	271	140	45	350	70	–	410	18	24	24	26.5
185	120	199	260	271	140	45	350	70	–	410	18	24	24	26.5
190	130	208	265	290	150	50	380	70	–	445	22	28	24	34.0
190	130	208	265	290	150	50	380	70	–	445	22	28	24	34.0
205	150	223	285	302	150	50	420	80	–	500	26	32	30	39.0
205	150	223	285	302	150	50	420	80	–	500	26	32	30	39.0
220	160	241	295	323	160	60	450	90	–	530	26	32	30	48.0
220	160	241	295	323	160	60	450	90	–	530	26	32	30	48.0
235	160	254	315	344	170	60	470	90	–	550	26	32	30	54.5
235	160	254	315	344	170	60	470	90	–	550	26	32	30	54.5

LARGE PLUMMER BLOCK HOUSINGS – 3000 AND 3100 SERIES

- The basic numbers for ordering plummer block housings and components are listed in the table below.
- Each housing includes the housing cap, base and cap bolts.
- Housings shown are furnished in cast iron. If cast steel is desired, add the letter S to the alpha prefix (e.g., SNTS 518). If ductile iron is desired, add the letter D to the alpha prefix (e.g., SNTD 505).
- Housings with the F suffix are manufactured for fixed bearings. Those with the L suffix are float position housings.

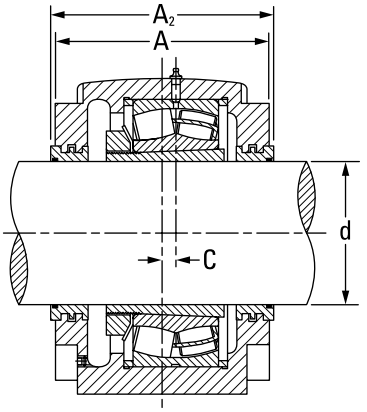

Labyrinth Seal

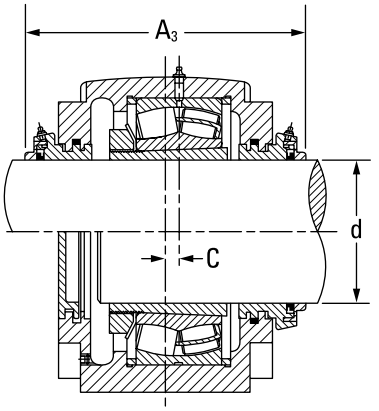

Taconite Seal

Shaft Dia. d	Housing	Bearing	Locating Rings[1] O.D. x Width	Quantity (Typically required for this bearing/housing configuration)	Adapter Sleeve[2]	Locknut[3]	Lockwasher[3]	Labyrinth Seal[3]	Taconite Seal[3]	End Cover[3]
mm										
150	SNT 3134	23134K	SR280X10	2	H3134	KM34	MB34	LO34	TA34	EC34
160	SNT 3036 SNT 3136	23036K 23136K	SR280X17 SR300X10	2 2	H3036 H3136	KM36 KM36	MB36 MB36	LO36 LO36	TA36 TA36	EC36 EC36
170	SNT 3038 SNT 3138	23038K 23138K	SR290X10 SR320X10	4 2	H3038 H3138	KML38 KM38	MBL38 MB38	LO38 LO38	TA38 TA38	EC38 EC38
180	SNT 3040 SNT 3140	23040K 23140K	SR310X10 SR340X10	4 2	H3040 H3140	KM40 KM40	MB40 MB40	LO40 LO40	TA40 TA40	EC40 EC40
200	SNT 3044 SNT 3144	23044K 23144K	SR340X10 SR370X10	4 2	OH3044H OH3144H	HM3044 HM44T	MS3044 MB44	LO44 LO44	TA44 TA44	EC44 EC44
220	SNT 3048 SNT 3148	23048K 23148K	SR360X12 SR400X10	4 2	OH3048H OH3148H	HM3048 HM48T	MS3048 MB48	LO48 LO48	TA48 TA48	EC48 EC48
240	SNT 3052 SNT 3152	23052K 23152K	SR400X22 SR440X10	2 2	OH3052H OH3152H	HM3052 HM52T	MS3052 MB52	LO52 LO52	TA52 TA52	EC52 EC52
260	SNT 3056 SNT 3156	23056K 23156K	SR420X10 SR460X10	6 2	OH3056H OH3156H	HM3056 HM56T	MS3056 MB56	LO56 LO56	TA56 TA56	EC56 EC56
280	SNT 3060 SNT 3160	23060K 23160K	SR460X25 SR500X10	2 2	OH3060H OH3160H	HM3060 HM3160	MS3060 MS3160	LO60 LO60	TA60 TA60	EC60 EC60
300	SNT 3064 SNT 3164	23064K 23164K	SR480X10 SR540X10	6 2	OH3064H OH3164H	HM3064 HM3164	MS3064 MS3164	LO64 LO64	TA64 TA64	EC64 EC64
320	SNT 3068 SNT 3168F SNT 3168L	23068K 23168K 23168K	SR520X16 FIXED HOUSING FLOAT HOUSING	4 – –	OH3068H OH3168H OH3168H	HM3068 HM3168 HM3168	MS3068 MS3168 MS3168	LO68 LO68 LO68	TA68 TA68 TA68	EC68 EC68 EC68
340	SNT 3072 SNT 3172F SNT 3172L	23072K 23172K 23172K	SR540X16 FIXED HOUSING FLOAT HOUSING	4 – –	OH3072H OH3172H OH3172H	HM3072 HM3172 HM3172	MS3072 MS3172 MS3172	LO72 LO72 LO72	TA72 TA72 TA72	EC72 EC72 EC72

[1]Locating rings = minimum two required for fixed position, sold one piece per box.
[2]Adapter sleeve assembly includes one sleeve, one locknut and one lockwasher.
[3]Labyrinth, taconite seal, end cover, locknut, lockwasher, sold one piece per box.

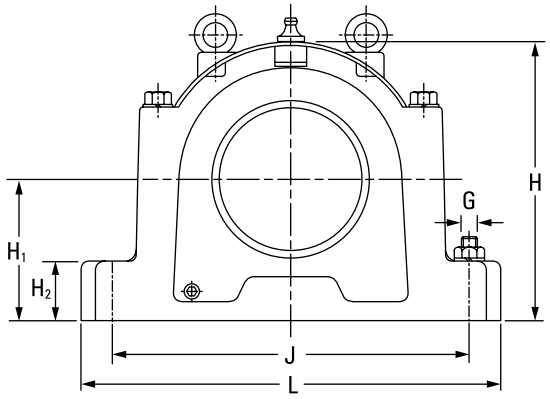

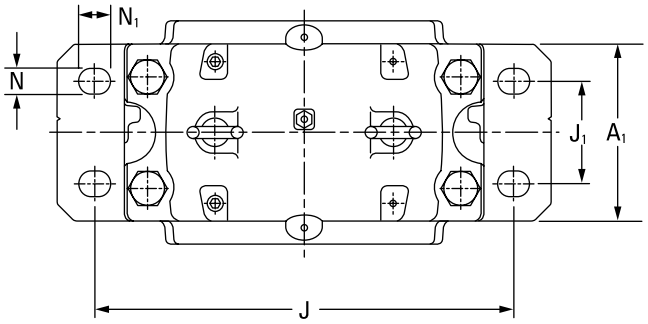

Housing Dimensions													4 Bolts Req'd	Housing Mass
A	A_1	A_2	A_3	C	H	H_1	H_2	J	J_1	L	N	N_1	G	
mm	mm	mm	mm	mm	mm	mm	mm	mm	mm	mm	mm	mm	mm	kg
230	180	240	300	14	333	170	70	430	100	510	28	34	24	75
230	180	240	310	14	333	170	70	430	100	510	28	34	24	72
240	190	250	315	15	353	180	75	450	110	530	28	34	24	92
240	190	250	315	15	353	180	75	450	110	530	28	34	24	81
260	210	270	335	10	375	190	80	480	120	560	28	34	24	112
260	210	270	335	10	375	190	80	480	120	560	28	34	24	110
280	230	290	355	10	411	210	85	510	130	610	35	42	30	130
280	230	290	355	10	411	210	85	510	130	610	35	42	30	118
290	240	300	365	12	434	220	90	540	140	640	35	42	30	140
290	240	300	385	12	434	220	90	540	140	640	35	42	30	138
310	260	315	400	12	474	240	95	600	150	700	35	42	30	193
310	260	315	400	12	474	240	95	600	150	700	35	42	30	189
320	280	330	415	13	516	260	100	650	160	770	42	50	36	235
320	280	330	415	13	516	260	100	650	160	770	42	50	36	254
320	280	330	415	16	551	280	105	670	160	790	42	50	36	260
320	280	330	415	16	551	280	105	670	160	790	42	50	36	260
350	310	360	445	22	591	300	110	710	190	830	42	50	36	310
350	310	360	445	22	591	300	110	710	190	830	42	50	36	300
370	330	380	462	23	631	320	115	750	200	880	42	50	36	346
370	330	380	465	23	631	320	115	750	200	880	42	50	36	339
400	360	410	492	24	675	340	120	810	220	950	42	50	36	432.5
400	360	410	492	24	675	340	120	810	220	950	42	50	36	429.5
370	330	380	465	23	631	320	115	750	200	950	42	50	36	342
400	360	410	492	30	695	350	120	840	220	1000	42	50	36	458
400	360	410	492	30	695	350	120	840	220	1000	42	50	36	454

Continued on next page.

LARGE PLUMMER BLOCK HOUSINGS – 3000 AND 3100 SERIES – *continued*

- The basic numbers for ordering plummer block housings and components are listed in the table below.
- Each housing includes the housing cap, base and cap bolts.
- Housings shown are furnished in cast iron. If cast steel is desired, add the letter S to the alpha prefix (e.g., SNTS 518). If ductile iron is desired, add the letter D to the alpha prefix (e.g., SNTD 505).
- Housings with the F suffix are manufactured for fixed bearings. Those with the L suffix are float position housings.

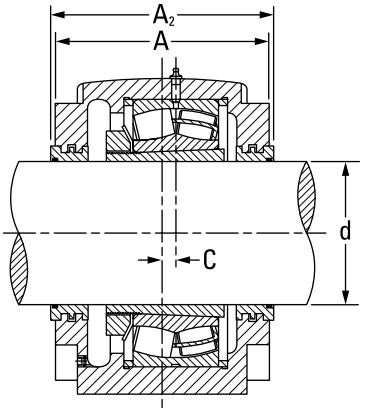

Labyrinth Seal

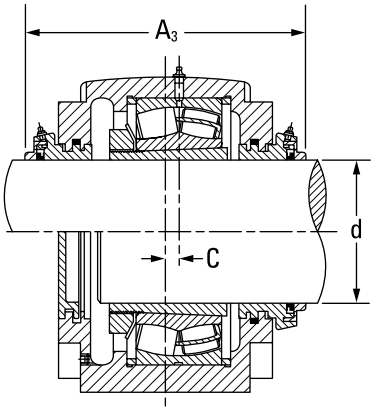

Taconite Seal

Continued from previous page.

Shaft Dia. d	Housing	Bearing	Locating Rings[1] O.D. x Width	Quantity (Typically required for this bearing/housing configuration)	Adapter Sleeve[2]	Locknut[3]	Lockwasher[3]	Labyrinth Seal[3]	Taconite Seal[3]	End Cover[3]
mm										
360	SNT 3076F	23076K	FIXED HOUSING	–	OH3076H	HM3076	MS3076	LO76	TA76	EC76
	SNT 3076L	23076K	FLOAT HOUSING		OH3076H	HM3076	MS3076	LO76	TA76	EC76
	SNT 3176F	23176K	FIXED HOUSING		OH3176H	HM3176	MS3176	LO76	TA76	EC76
	SNT 3176L	23176K	FLOAT HOUSING		OH3176H	HM3176	MS3176	LO76	TA76	EC76
380	SNT 3080F	23080K	FIXED HOUSING	–	OH3080H	HM3080	MS3080	LO80	TA80	EC80
	SNT 3080L	23080K	FLOAT HOUSING		OH3080H	HM3080	MS3080	LO80	TA80	EC80
	SNT 3180F	23180K	FIXED HOUSING		OH3180H	HM3180	MS3180	LO80	TA80	EC80
	SNT 3180L	23180K	FLOAT HOUSING		OH3180H	HM3180	MS3180	LO80	TA80	EC80
400	SNT 3084F	23084K	FIXED HOUSING	–	OH3084H	HM3084	MS3084	LO84	TA84	EC84
	SNT 3084L	23084K	FLOAT HOUSING		OH3084H	HM3084	MS3084	LO84	TA84	EC84

[1]Locating rings = minimum two required for fixed position, sold one piece per box.
[2]Adapter sleeve assembly includes one sleeve, one locknut and one lockwasher.
[3]Labyrinth, taconite seal, end cover, locknut, lockwasher, sold one piece per box.

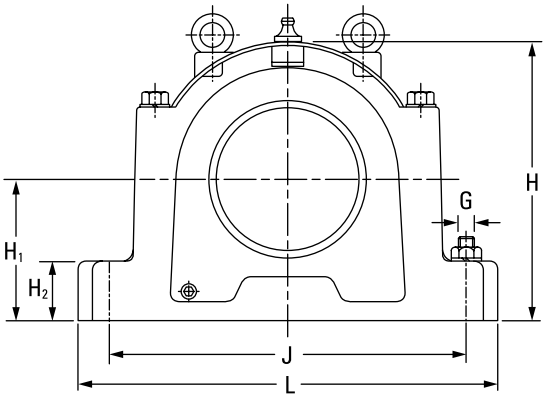

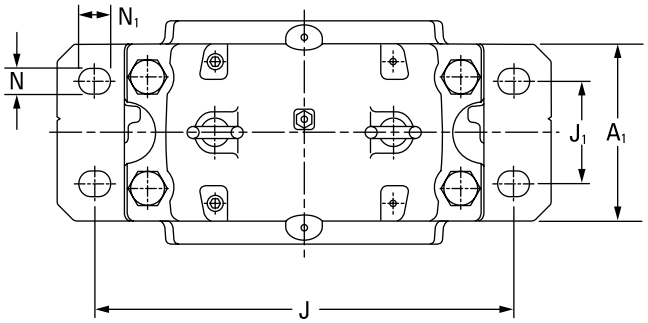

Housing Dimensions													4 Bolts Req'd	Housing Mass
A	A_1	A_2	A_3	C	H	H_1	H_2	J	J_1	L	N	N_1	G	
mm	mm	mm	mm	mm	mm	mm	mm	mm	mm	mm	mm	mm	mm	kg
400	360	410	495	24	675	340	120	810	220	1000	42	50	36	430
400	360	410	495	24	675	340	120	810	220	1000	42	50	36	427
400	360	410	492	30	715	360	120	870	220	1040	42	50	36	487
400	360	410	492	30	715	360	120	870	220	1040	42	50	36	484
400	360	410	495	30	695	350	120	840	220	1040	42	50	36	454
400	360	410	495	30	695	350	120	840	220	1040	42	50	36	450
430	390	440	522	30	775	380	125	950	240	1120	48	60	42	595
430	390	440	522	30	775	380	125	950	240	1120	48	60	42	595
400	360	410	495	30	715	360	120	870	220	1120	42	50	36	483
400	360	410	495	30	715	360	120	870	220	1120	42	50	36	480

METRIC SHAFT DIAMETERS

TABLE 31. SUGGESTED METRIC SHAFT DIAMETERS FOR USE WITH ADAPTER SLEEVES (MM)

Shaft O.D.	Max.	Min.	Shaft O.D.	Max.	Min.
20	20.000	19.925	190	190.000	189.875
25	25.000	24.925	200	200.000	199.875
30	30.000	29.925	210	210.000	209.850
35	35.000	34.925	220	220.000	219.850
40	40.000	39.925	230	230.000	229.850
45	45.000	44.925	240	240.000	239.850
50	50.000	49.925	250	250.000	249.850
55	55.000	54.900	260	260.000	259.850
60	60.000	59.900	270	270.000	269.825
65	65.000	64.900	280	280.000	279.825
70	70.000	69.900	290	290.000	289.825
75	75.000	74.900	300	300.000	299.825
80	80.000	79.900	310	310.000	309.825
85	85.000	84.900	320	320.000	319.800
90	90.000	89.900	330	330.000	329.800
95	95.000	94.900	340	340.000	339.800
100	100.000	99.900	350	350.000	349.800
105	105.000	104.875	360	360.000	359.800
110	110.000	109.875	370	370.000	369.800
115	115.000	114.875	380	380.000	379.800
120	120.000	119.875	390	390.000	389.800
125	125.000	124.875	400	400.000	399.800
130	130.000	129.875	410	410.000	409.800
135	135.000	134.875	420	420.000	419.800
140	140.000	139.875	430	430.000	429.800
145	145.000	144.875	440	440.000	439.800
150	150.000	149.875	450	450.000	449.800
160	160.000	159.875	460	460.000	459.800
170	170.000	169.875	470	470.000	469.800
180	180.000	179.875	480	480.000	479.800

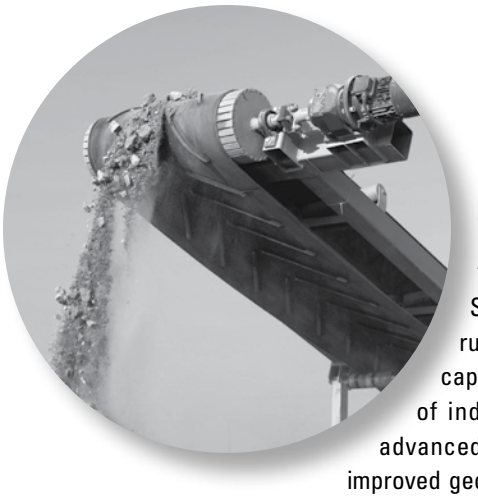

SAF SPHERICAL ROLLER BEARING PILLOW BLOCKS

Spherical roller bearing pillow blocks combine rugged cast-iron or steel housings with high-capacity bearings to meet the toughest demands of industry. Each pillow block contains an advanced-design spherical roller bearing with improved geometry and raceway finish for optimal load capacity and service life. Integrated housing and bearing features enhance unit lubrication characteristics. Multiple sealing options protect against contamination.

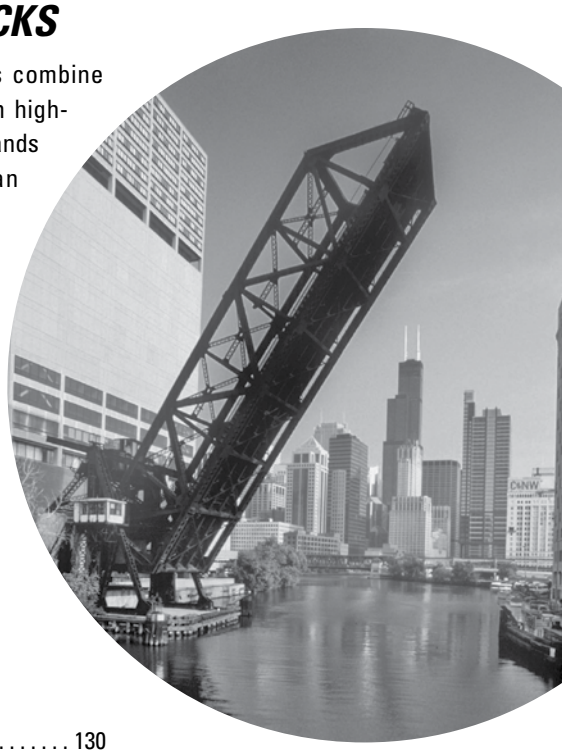

Nomenclature 130
Introduction 131
Design and Construction 132
Mounting 132
Lubrication 133
Seals 133
Load Ratings and Life 133
Inch Tapered Bore Mounting SAF225 and SAF226 Series 134
Inch Tapered Bore Mounting SDAF225 and SDAF226 Series 144
Inch Tapered Bore Mounting SAF230K and SDAF230K Series . . 148
Inch Tapered Bore Mounting SDAF231K and SDAF232K Series . 152
Inch Straight Bore Mounting SAF222 and SAF223 Series 154
Inch Straight Bore Mounting SDAF222 and SDAF223 Series 156
Inch Straight Bore Mounting SDAF231 and SDAF232 Series 158
Inch Shaft Diameters 160
Inch TU Take-Up Units 161
Inch TTU Take-Up Units 162
Inch DUSTAC® Shaft Seal 164

NOMENCLATURE

SAF two- or four-bolt pillow block, cast iron
SAFD two- or four-bolt heavy-duty pillow block, ductile iron
SAFS two- or four-bolt pillow block, cast steel
SDAF four-bolt heavy-duty-type pillow block, cast iron
SDAFD four-bolt heavy-duty-type pillow block, ductile iron
SDAFS four-bolt heavy-duty pillow block, cast steel
FSAF four-bolt pillow block, cast iron (only when an option)
FSAFD four-bolt pillow block, ductile iron (only when an option)
FSAFS four-bolt pillow block, cast steel (only when an option)

To indicate shaft size and is required for non-standard shaft sizes and pillow block units of 8 7/16 inch shaft size or larger.

SDAF **23152** **K** – **9 1/2** **FXOP**

Number indicates basic spherical bearing series. See product data charts for spherical bearing number.

K indicated on adapter-type mounting arrangement (for 230, 231, 232 Series, SDAF231K and SDAF232K Series)
DV DUSTAC seals - both sides
DC DUSTAC seals - one side

Indicate construction:
FXOP fixed open
FXCL fixed closed
FLOP float open
FLCL float closed

Fig. 47. Pillow blocks.

INTRODUCTION

Timken's capabilities in engineering and manufacturing heavy-duty pillow blocks provide important user benefits. In addition, Timken's worldwide sales organization is staffed with experienced engineers who are available for consultation on any pillow block or bearing application. Our expert engineering assistance also is available for applications involving shaft sizes 1016 mm (40 inch) and larger, such as BOF trunnions, bridge blocks and ball mills. If your design calls for shaft sizes or loads not listed in this catalog, contact your Timken sales engineer for information about availability of special units.

- **Sizes:** 1.37795-11.811 inch shafts (35-300 mm). Special shaft sizes up to 1000 mm (39.37 inch) and beyond.
- **Applications:** Conveyors, mining, cement, casters, rolling mills, heavy movable structures.
- **Features:** Split construction for convenient assembly and disassembly. These units include pry tool slots and the exclusive Pry-Lug fulcrum, which simplifies bearing inspection, service and replacement.
- **Benefits:** Caps can be removed easily and quickly without damage to the bearing or housing.

DESIGN AND CONSTRUCTION

Timken supplies pillow blocks equipped with either tapered bore bearings with adapters for mounting on straight shafts or cylindrical bore bearings for assembly on shouldered shafts. Timken offers a broader range of pillow blocks, including solid blocks, other than are shown in this catalog. Please reference the Timken Housed Unit Catalog (order no. 10475).

Timken SAF spherical roller bearing pillow blocks are made of split construction for convenient assembly and disassembly. These units include pry-tool slots and the exclusive Pry-Lug fulcrum that simplify bearing inspection, service and replacement.

Caps can be removed easily and quickly without damage to the bearing or housing.

Timken uses a system of doweling caps and bases together at an early stage of manufacturing, so that they remain a single unit during machining. They are not interchangeable as separate parts and become precisely mated components, helping to ensure a precise fit. Timken manufactures pillow blocks in two styles: SAF and SDAF. The larger SDAF block is suggested for extreme-duty applications.

Standard caps and bases are made from high-grade, stress-relieved cast iron. They also are available in cast steel.

All Timken® split pillow blocks are designed for four-bolt mounting. Certain smaller sizes are normally furnished for two-bolt mounting. These assemblies are indicated in the following tables and can be ordered with optional four-bolt base.

Four cap bolts are used in most Timken pillow blocks in order to equalize the pressure between the cap and the base, helping to prevent lubricant loss.

The illustration below shows all parts of a pillow block assembly that are described throughout this section.

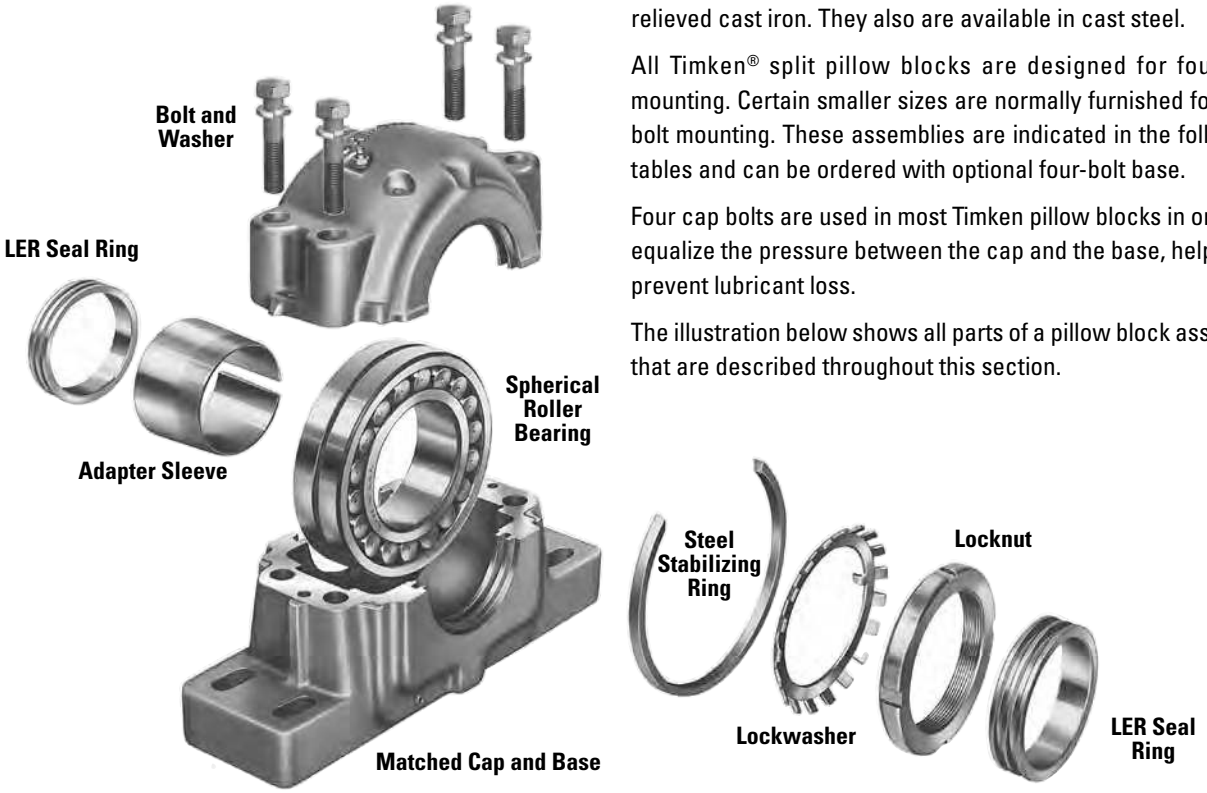

Fig. 48. Exploded view of a Timken spherical roller bearing pillow block, showing tapered bore spherical roller bearing, adapter sleeve, locknut and lockwasher, stabilizing ring and triple-labyrinth seals. Also shown are recesses in cap and base that form pry-tool slot, and integral fulcrum lugs in base and cap.

MOUNTING

ADAPTER VS. STRAIGHT BORE

Usually a spherical roller bearing pillow block assembly is mounted on a straight shaft using a tapered bore bearing and adapter assembly. Standard commercial shafting can be used without additional machining. (Suggested inch shaft diameters are shown in table 32 on page 160.) Adapter mount also permits maximum flexibility in the axial positioning of the bearing on the shaft and will accommodate light locational thrust loads. Timken pillow blocks for tapered bore and adapter-mounted bearings are available in Series 225, 226, 230, 231K and 232K.

Adapter-mounted spherical roller bearings require the correct removal of diametral clearance from the bearing to prevent relative rotation between inner race and sleeve or shaft. For proper shaft mounting of adapter-type spherical roller bearings, see page 21.

NOTE

Failure to employ proper mounting procedures can cause excessive heating and reduced bearing performance.

When application conditions produce heavy thrust loads, or a need exists for exact axial location or a positive shaft interference fit, a direct straight bore mounting may be the best option. This requires a shouldered shaft, machined for proper fit, and a straight bore bearing. Timken pillow block assemblies for straight bore applications are available in series 222, 223, 231 and 232.

Suggested fits for shafts in cylindrical bore spherical roller bearings are shown in the ENGINEERING section in table 4 on page 23. For applications involving heavy shock, vibration, unbalanced rotating loads or other non-standard conditions, consult your Timken sales engineer.

FIXED AND FLOAT PILLOW BLOCKS

Any style of Timken pillow blocks can be easily installed at either the float or fixed position on the shaft. For the fixed position, a stabilizing ring is added between the bearing outer-face ring and the housing shoulder to positively locate the shaft and prevent axial movement.

Some applications require centering of the bearing in its housing. To accomplish this, two special-width stabilizing rings can be ordered.

In the float position, the ring is not used, allowing the bearing to move axially (a maximum of $^3/_8$ inch) to compensate for thermal expansion or contraction of the shaft.

Pillow blocks ordered by the numbers in the dimension tables are fixed units. To order float units, specify by adding suffix "Float" or "FL" to the pillow block number.

CLOSED-END INSTALLATIONS

In some applications, the shaft end is designed to terminate inside the pillow block. For this design, positive fitting end-cap inserts are available to help seal out contaminants and retain lubricant. Timken heavy-duty end plugs include O-rings for positive sealing.

Designers and installers need to make sure the shaft end does not contact the closure. A minimum of $^1/_8$ inch clearance at maximum thermal expansion is suggested between the end of the shaft and the closure. Dimension "Y" in the tables defines the maximum permissible length of the shaft from the centerline of the pillow block housing. If end closure is desired, specify by adding "CL" (one end closed) to the pillow block assembly number.

LUBRICATION

Timken pillow block housings are designed for grease and oil-bath lubrication. They also can be modified easily to accommodate circulating oil- or oil/air-mist systems. Grease fittings or sight gages are available upon request.

A lubrication groove and oil holes are provided in the bearing outer ring. This feature, designated by adding suffix "W33" to the bearing number, should be specified whenever re-ordering bearings for pillow blocks. In most cases, the fresh lubricant is fed directly to the center of the bearing between the rows of rollers and distributed to the rest of the bearing. This helps ensure the used lubricant is purged from the bearing.

SEALS

Precision triple-ring labyrinth seals are supplied with all Timken pillow blocks to help exclude foreign matter and retain lubricants. The pillow block base includes extra-large oil return holes at the bottom of the seal grooves to help prevent leakage past the seals.

For extremely contaminated or abrasive environments, the DUSTAC® seal offers protection against concentrations of dust or abrasive material that a labyrinth seal cannot keep out. See page 164 for further information on DUSTAC.

LOAD RATINGS AND LIFE

Load ratings for the spherical roller bearings that are used in pillow blocks are found in the dimension tables on pages 66-93. Life calculation formulas are found in the Engineering Manual (order no. 10424) available on www.timken.com.

In addition to individual bearing selection, the ability of the pillow block to carry the operating load should be considered.

It should be noted that the load rating figures supplied in this catalog are applicable only when the load direction is generally toward the base of the pillow block. If the pillow block must be mounted so the load can be applied in any other direction, consult your Timken sales engineer.

INCH TAPERED BORE MOUNTING SAF225 AND SAF226 SERIES

- The basic number for ordering complete pillow block assemblies is listed in the table below.
- Each assembly includes the housing cap and base, cap bolts, bearing, bearing adapter, locknut and lockwasher, stabilizing ring and triple-ring seals.
- If only the pillow block housing is desired, use the numbers listed in column headed "Housing Only." These units include cap, base, cap bolts, triple-ring seals and stabilizing ring.
- Assemblies and pillow blocks described on this page constitute a fixed unit. To order float units, specify the part number plus the suffix "Float" or "FL."
- Assemblies shown are furnished in cast iron. If cast steel is desired, add the letter "S" to the alpha prefix. If ductile iron is desired, add the letter D to the alpha prefix (e.g., SAFS 22515 or SAFD 22515).
- Four-bolt bases are standard on all assemblies unless as noted.
- If one end closed assembly is required, specify "CL" in assembly number when ordering.

Pillow Block Assembly[1]	Standard Shaft[2] Diam S-1	A	B	C	D	E		F	H
						Max.	Min.		
	in.	in.	in.	in.	in.	in.	in.	in.	in.
SERIES SAF225									
SAF22509	1 3/8 **1 7/16** 1 1/2	**2 1/4**	**8 1/4**	**2 3/8**	**13/16**	**7**	**6 1/4**	—	**4 3/8**
SAF22510	1 5/8 **1 11/16** 1 3/4	**2 1/2**	**8 1/4**	**2 3/8**	**15/16**	**7**	**6 1/2**	—	**4 3/4**
SAF22511	1 7/8 **1 15/16** 2	**2 3/4**	**9 5/8**	**2 3/4**	**15/16**	**7 7/8**	**7 3/8**	—	**5 11/32**
SAF22513	2 1/8 **2 3/16** 2 1/4	**3**	**11**	**3 1/8**	**1**	**9 1/2**	**8 1/8**	—	**5 25/32**
SAF22515	2 3/8 **2 7/16** 2 1/2	**3 1/4**	**11 1/4**	**3 1/8**	**1 1/8**	**9 5/8**	**8 5/8**	—	**6 3/8**
FSAF22515	2 3/8 **2 7/16** 2 1/2	**3 1/4**	**11 1/4**	**3 1/8**	**1 1/8**	**9 5/8**	**8 5/8**	**1 7/8**	**6 3/8**
SAF22516	2 5/8 **2 11/16** 2 3/4	**3 1/2**	**13**	**3 1/2**	**1 3/16**	**11**	**9 5/8**	—	**6 7/8**
FSAF22516	2 5/8 **2 11/16** 2 3/4	**3 1/2**	**13**	**3 1/2**	**1 3/16**	**11**	**9 5/8**	**2 1/8**	**6 7/8**
SAF22517	2 13/16 2 7/8 **2 15/16** 3	**3 3/4**	**13**	**3 1/2**	**1 1/4**	**11**	**9 7/8**	—	**7 1/4**
FSAF22517	2 13/16 2 7/8 **2 15/16** 3	**3 3/4**	**13**	**3 1/2**	**1 1/4**	**11**	**9 7/8**	**2 1/8**	**7 1/4**

[1]Bold shaft sizes are standard. When ordering non-standard pillow block assemblies specify the shaft size.
[2]See page page 160, table 32 for suggested shaft diameter S-1 tolerances.
[3]Includes sleeve, locknut and lockwasher. Add shaft size to order.
[4]"Housing Only" includes cap, base, cap bolts, triple-ring seals and stabilizing ring as required. When ordering non-standard housing only, specify the shaft size.
[5]Stabilizing ring used for fixed (FX) block; do not use for float (FL) mounting.

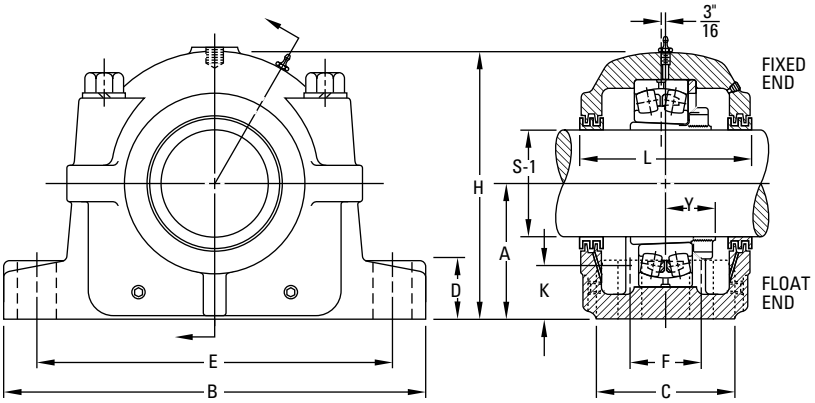

Oil Level K	L	Y	Base Bolts Required No.	Base Bolts Required Size	Bearing Number	Adapter Assembly Number[3]	Housing[4] Only	Stabilizing Ring[5] 1 Req'd	Triple Seal 2 Req'd	Assembly Weight
in.	in.	in.		in.						lbs.
31/32	3 5/8	1 3/32	2	1/2	22209K	SNW-09 x 1 3/8 **SNW-09 x 1 7/16** SNW-09 x 1 1/2	SAF509	SR-9-9	LER 16 **LER 17** LER 18	12
1 3/32	3 5/8	1 3/32	2	1/2	22210K	SNW-10 x 1 5/8 **SNW-10 x 1 11/16** SNW-10 x 1 3/4	SAF510	SR-10-0	LER 19 **LER 20** LER 21	13
1 3/16	3 3/4	1 3/16	2	1/2	22211K	SNW-11 x 1 7/8 **SNW-11 x 1 15/16** SNW-11 x 2	SAF 511	SR-11-0	LER 23 **LER 24** LER 25	16
1 1/8	4 5/16	1 7/32	2	1/2	22213K	SNW-13 x 2 1/8 **SNW-13 x 2 3/16** SNW-13 x 2 1/4	SAF 513	SR-13-0	LER 28 **LER 29** LER 30	19.5
1 1/4	4 3/4	1 9/32	2	5/8	22215K	SNW-15 x 2 3/8 **SNW-15 x 2 7/16** SNW-15 x 2 1/2	SAF515	SR-15-0	LER 35 **LER 37** LER 39	30
1 1/4	4 3/4	1 9/32	4	1/2	22215K	SNW-15 x 2 3/8 **SNW-15 x 2 7/16** SNW-15 x 2 1/2	FSAF515	SR-15-0	LER 35 **LER 37** LER 39	30
1 11/32	4 7/8	1 21/64	2	3/4	22216K	SNW-16 x 2 5/8 **SNW-16 x 2 11/16** SNW-16 x 2 3/4	SAF516	SR-16-13	LER 41 **LER 44** LER 45	37
1 11/32	4 7/8	1 21/64	4	5/8	22216K	SNW-16 x 2 5/8 **SNW-16 x 2 11/16** SNW-16 x 2 3/4	FSAF516	SR-16-13	LER 41 **LER 44** LER 45	37
1 7/16	4 15/16	1 27/64	2	3/4	22217K	SNW-17 x 2 13/16 SNW-17 x 2 7/8 **SNW-17 x 2 15/16** SNW-17 x 3	SAF517	SR-17-14	LER 51 LER 52 **LER 53** LER 54	40
1 7/16	4 15/16	1 27/64	4	5/8	22217K	SNW-17 x 2 13/16 SNW-17 x 2 7/8 **SNW-17 x 2 15/16** SNW-17 x 3	FSAF517	SR-17-14	LER 51 LER 52 **LER 53** LER 54	40

Continued on next page.

INCH TAPERED BORE MOUNTING SAF225 AND SAF226 SERIES – *continued*

- The basic number for ordering complete pillow block assemblies is listed in the table below.
- Each assembly includes the housing cap and base, cap bolts, bearing, bearing adapter, locknut and lockwasher, stabilizing ring and triple-ring seals.
- If only the pillow block housing is desired, use the numbers listed in column headed "Housing Only." These units include cap, base, cap bolts, triple-ring seals and stabilizing ring.
- Assemblies and pillow blocks described on this page constitute a fixed unit. To order float units, specify the part number plus the suffix "Float" or "FL."
- Assemblies shown are furnished in cast iron. If cast steel is desired, add the letter "S" to the alpha prefix. If ductile iron is desired, add the letter D to the alpha prefix (e.g., SAFS 22515 or SAFD 22515).
- Four-bolt bases are standard on all assemblies unless as noted.
- If one end closed assembly is required, specify "CL" in assembly number when ordering.

Continued from previous page.

Pillow Block Assembly[1]	Standard Shaft[2] Diam S-1	A	B	C	D	E		F	H
						Max.	Min.		
	in.	in.	in.	in.	in.	in.	in.	in.	in.
SAF22518	3 1/16 3 1/8 **3 3/16** 3 1/4	**4**	**13 3/4**	**3 7/8**	**1 1/2**	**11 5/8**	**10 3/8**	—	**7 3/4**
FSAF22518	3 1/16 3 1/8 **3 3/16** 3 1/4	**4**	**13 3/4**	**3 7/8**	**1 1/2**	**11 5/8**	**10 3/8**	**2 1/8**	**7 3/4**
SAF22520	3 3/8 **3 7/16** 3 1/2	**4 1/2**	**15 1/4**	**4 3/8**	**1 3/4**	**13 1/8**	**11 5/8**	—	**8 11/16**
FSAF22520	3 3/8 **3 7/16** 3 1/2	**4 1/2**	**15 1/4**	**4 3/8**	**1 3/4**	**13 1/8**	**11 5/8**	**2 3/8**	**8 11/16**
SAF22522	3 13/16 3 7/8 **3 15/16** 4	**4 15/16**	**16 1/2**	**4 3/4**	**2**	**14 1/2**	**12 5/8**	**2 3/4**	**9 9/16**
SAF22524	4 1/16 4 1/8 **4 3/16** 4 1/4	**5 1/4**	**16 1/2**	**4 3/4**	**2 1/8**	**14 1/2**	**13 1/4**	**2 3/4**	**10 1/4**
SAF22526	4 5/16 4 3/8 **4 7/16** 4 1/2	**6**	**18 3/8**	**5 1/8**	**2 3/8**	**16**	**14 5/8**	**3 1/4**	**11 9/16**
SAF22528	4 13/16 4 7/8 **4 15/16** 5	**6**	**20 1/8**	**5 7/8**	**2 3/8**	**17 1/8**	**16**	**3 3/8**	**11 3/4**
SAF22530	5 1/8 **5 3/16** 5 1/4	**6 5/16**	**21 1/4**	**6 1/4**	**2 1/2**	**18 1/4**	**17**	**3 3/4**	**12 1/2**

[1]Bold shaft sizes are standard. When ordering non-standard pillow block assemblies specify the shaft size.
[2]See page page 160, table 32 for suggested shaft diameter S-1 tolerances.
[3]Includes sleeve, locknut and lockwasher. Add shaft size to order.
[4]"Housing Only" includes cap, base, cap bolts, triple-ring seals and stabilizing ring as required. When ordering non-standard housing only, specify the shaft size.
[5]Stabilizing ring used for fixed (FX) block; do not use for float (FL) mounting.

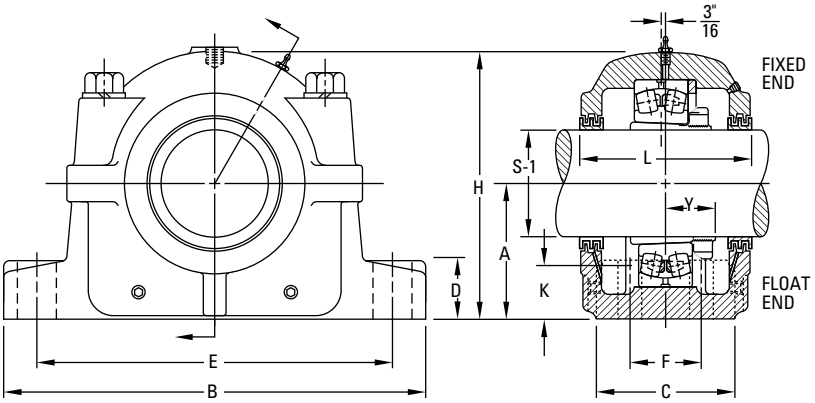

Oil Level K	L	Y	Base Bolts Required No.	Base Bolts Required Size	Bearing Number	Adapter Assembly Number[3]	Housing[4] Only	Stabilizing Ring[5] 1 Req'd	Triple Seal 2 Req'd	Assembly Weight
in.	in.	in.		in.						lbs.
						SNW-18 x 3 1/16			LER 67	
						SNW-18 x 3 1/8			LER 68	
1 17/32	**6 1/4**	**1 37/64**	**2**	**3/4**	**22218K**	**SNW-18 x 3 3/16**	**SAF518**	**SR-18-15**	**LER 69**	**49**
						SNW-18 x 3 1/4			LER 70	
						SNW-18 x 3 1/16			LER 67	
						SNW-18 x 3 1/8			LER 68	
1 17/32	**6 1/4**	**1 37/64**	**4**	**5/8**	**22218K**	**SNW-18 x 3 3/16**	**FSAF518**	**SR-18-15**	**LER 69**	**49**
						SNW-18 x 3 1/4			LER 70	
						SNW-20 x 3 3/8			LER 101	
1 3/4	**6**	**1 49/64**	**2**	**7/8**	**22220K**	**SNW-20 x 3 7/16**	**SAF520**	**SR-20-17**	**LER 102**	**65**
						SNW-20 x 3 1/2			LER 103	
						SNW-20 x 3 3/8			LER 101	
1 3/4	**6**	**1 49/64**	**4**	**3/4**	**22220K**	**SNW-20 x 3 7/16**	**FSAF520**	**SR-20-17**	**LER 102**	**65**
						SNW-20 x 3 1/2			LER 103	
						SNW-22 x 3 13/16			LER 107	
						SNW-22 x 3 7/8			LER 108	
1 7/8	**6 3/8**	**1 61/64**	**4**	**3/4**	**22222K**	**SNW-22 x 3 15/16**	**SAF522**	**SR-22-19**	**LER 109**	**81**
						SNW-22 x 4			LER 110	
						SNW-24 x 4 1/16			LER 111	
						SNW-24 x 4 1/8			LER 112	
1 15/16	**7 3/8**	**2 3/32**	**4**	**3/4**	**22224K**	**SNW-24 x 4 3/16**	**SAF524**	**SR-24-20**	**LER 113**	**94**
						SNW-24 x 4 1/4			LER 114	
						SNW-26 x 4 5/16			LER 115	
						SNW-26 x 4 3/8			LER 115	
2 7/16	**8**	**2 17/64**	**4**	**7/8**	**22226K**	**SNW-26 x 4 7/16**	**SAF526**	**SR-26-0**	**LER 117**	**137**
						SNW-26 x 4 1/2			LER 118	
						SNW-28 x 4 13/16			LER 120	
						SNW-28 x 4 7/8			LER 121	
2 1/8	**7 3/4**	**2 13/32**	**4**	**1**	**22228K**	**SNW-28 x 4 15/16**	**SAF528**	**SR-28-0**	**LER 122**	**159**
						SNW-28 x 5			LER 123	
						SNW-30 x 5 1/8			LER 124	
2 3/16	**8 3/8**	**2 37/64**	**4**	**1**	**22230K**	**SNW-30 x 5 3/16**	**SAF530**	**SR-30-0**	**LER 125**	**189**
						SNW-30 x 5 1/4			LER 126	

Continued on next page.

INCH TAPERED BORE MOUNTING SAF225 AND SAF226 SERIES – *continued*

- The basic number for ordering complete pillow block assemblies is listed in the table below.
- Each assembly includes the housing cap and base, cap bolts, bearing, bearing adapter, locknut and lockwasher, stabilizing ring and triple-ring seals.
- If only the pillow block housing is desired, use the numbers listed in column headed "Housing Only." These units include cap, base, cap bolts, triple-ring seals and stabilizing ring.
- Assemblies and pillow blocks described on this page constitute a fixed unit. To order float units, specify the part number plus the suffix "Float" or "FL."
- Assemblies shown are furnished in cast iron. If cast steel is desired, add the letter "S" to the alpha prefix. If ductile iron is desired, add the letter D to the alpha prefix (e.g., SAFS 22515 or SAFD 22515).
- Four-bolt bases are standard on all assemblies unless as noted.
- If one end closed assembly is required, specify "CL" in assembly number when ordering.

Continued from previous page.

Pillow Block Assembly[1]	Standard Shaft[2] Diam S-1	A	B	C	D	E		F	H
						Max.	Min.		
	in.	in.	in.	in.	in.	in.	in.	in.	in.
SAF22532	5 3/8 **5 7/16** 5 1/2	**6 11/16**	**22**	**6 1/4**	**2 5/8**	**19 1/4**	**17 3/8**	**3 3/4**	**13 5/16**
SAF22534	5 13/16 5 7/8 **5 15/16** 6	**7 1/16**	**24 3/4**	**6 3/4**	**2 3/4**	**21 5/8**	**19 3/8**	**4 1/4**	**14 9/16**
SAF22536	6 5/16 6 3/8 **6 7/16** 6 1/2	**7 1/2**	**26 3/4**	**7 1/8**	**3**	**23 5/8**	**20 7/8**	**4 5/8**	**15 1/2**
SAF22538	6 13/16 6 7/8 **6 15/16** 7	**7 7/8**	**28**	**7 1/2**	**3 1/8**	**24 3/8**	**21 5/8**	**4 1/2**	**15 11/16**
SAF22540	7 1/8 **7 3/16** 7 1/4	**8 1/4**	**29 1/2**	**8**	**3 3/8**	**25**	**22 1/2**	**5**	**17 3/16**
SAF22544	7 13/16 7 7/8 **7 15/16** 8	**9 1/2**	**32 3/4**	**8 3/4**	**3 3/4**	**27 7/8**	**24 3/4**	**5 1/4**	**19 5/8**
SERIES SAF226									
SAF22615	2 3/8 **2 7/16** 2 1/2	**4**	**13 3/4**	**3 7/8**	**1 5/8**	**11 5/8**	**10 3/8**	**2 1/8**	**7 9/16**
SAF22616	2 5/8 **2 11/16** 2 3/4	**4 1/4**	**14 1/4**	**3 7/8**	**1 3/4**	**12 5/8**	**10 5/8**	**2 1/8**	**8 1/4**
SAF22617	2 13/16 2 7/8 **2 15/16** 3	**4 1/2**	**15 1/4**	**4 3/8**	**1 3/4**	**13 1/8**	**11 5/8**	—	**8 11/16**

[1]Bold shaft sizes are standard. When ordering non-standard pillow block assemblies specify the shaft size.
[2]See page page 160, table 32 for suggested shaft diameter S-1 tolerances.
[3]Includes sleeve, locknut and lockwasher. Add shaft size to order.
[4]"Housing Only" includes cap, base, cap bolts, triple-ring seals and stabilizing ring as required. When ordering non-standard housing only, specify the shaft size.
[5]Stabilizing ring used for fixed (FX) block; do not use for float (FL) mounting.

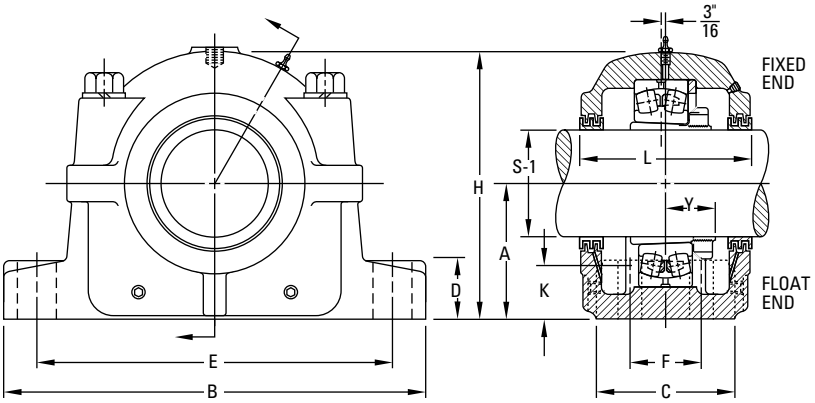

Oil Level K	L	Y	Base Bolts Required No.	Base Bolts Required Size	Bearing Number	Adapter Assembly Number[3]	Housing[4] Only	Stabilizing Ring[5] 1 Req'd	Triple Seal 2 Req'd	Assembly Weight
in.	in.	in.		in.						lbs.
2 3/16	**8 3/4**	**2 49/64**	**4**	**1**	**22232K**	SNW-32 x 5 3/8 **SNW-32 x 5 7/16** SNW-32 x 5 1/2	**SAF532**	**SR-32-0**	LER 129 **LER 130** LER 131	**225**
2 5/16	**9 3/8**	**2 59/64**	**4**	**1**	**22234K**	SNW-34 x 5 13/16 SNW-34 x 5 7/8 **SNW-34 x 5 15/16** SNW-34 x 6	**SAF534**	**SR-34-0**	LER 138 LER 139 **LER 140** LER 141	**300**
2 9/16	**9 11/16**	**2 61/64**	**4**	**1**	**22236K**	SNW-36 x 6 5/16 SNW-36 x 6 3/8 **SNW-36 x 6 7/16** SNW-36 x 6 1/2	**SAF536**	**SR-36-30**	LER 146 LER 147 **LER 148** LER 149	**330**
2 5/8	**10 3/4**	**3 7/64**	**4**	**1 1/4**	**22238K**	SNW-38 x 6 13/16 SNW-38 x 6 7/8 **SNW-38 x 6 15/16** SNW-38 x 7	**SAF538**	**SR-38-32**	LER 153 LER 154 **LER 155** LER 156	**375**
2 11/16	**10 13/16**	**3 9/32**	**4**	**1 1/4**	**22240K**	SNW-40 x 7 1/8 **SNW-40 x 7 3/16** SNW-40 x 7 1/4	**SAF540**	**SR-40-34**	LER 158 **LER 159** LER 160	**445**
3 3/8	**11 1/2**	**3 17/32**	**4**	**1 1/2**	**22244K**	SNW-44 x 7 13/16 SNW-44 x 7 7/8 **SNW-44 x 7 15/16** SNW-44 x 8	**SAF544**	**SR-44-38**	LER 165 LER 166 **LER 167** LER 168	**615**
1 19/32	**5 7/8**	**1 7/8**	**2, 4**	**3/4, 5/8**	**22315K**	SNW-115 x 2 3/8 **SNW-115 x 2 7/16** SNW-115 x 2 1/2	**SAF 615**	**SR-18-15**	LER 36 **LER 37** LER 38	**52**
1 11/16	**6 1/2**	**1 15/16**	**2, 4**	**3/4, 5/8**	**22316K**	SNW-116 x 2 5/8 **SNW-116 x 2 11/16** SNW-116 x 2 3/4	**SAF 616**	**SR-19-16**	LER 43 **LER 44** LER 45	**71**
1 13/16	**6 5/8**	**1 57/64**	**2**	**7/8**	**22317K**	SNW-117 x 2 13/16 SNW-117 x 2 7/8 **SNW-117 x 2 15/16** SNW-117 x 3	**SAF617**	**SR-20-17**	LER 182 LER 183 **LER 184** LER 185	**81**

Continued on next page.

INCH TAPERED BORE MOUNTING SAF225 AND SAF226 SERIES – *continued*

- The basic number for ordering complete pillow block assemblies is listed in the table below.
- Each assembly includes the housing cap and base, cap bolts, bearing, bearing adapter, locknut and lockwasher, stabilizing ring and triple-ring seals.
- If only the pillow block housing is desired, use the numbers listed in column headed "Housing Only." These units include cap, base, cap bolts, triple-ring seals and stabilizing ring.
- Assemblies and pillow blocks described on this page constitute a fixed unit. To order float units, specify the part number plus the suffix "Float" or "FL."
- Assemblies shown are furnished in cast iron. If cast steel is desired, add the letter "S" to the alpha prefix. If ductile iron is desired, add the letter D to the alpha prefix (e.g., SAFS 22515 or SAFD 22515).
- Four-bolt bases are standard on all assemblies unless as noted.
- If one end closed assembly is required, specify "CL" in assembly number when ordering.

Continued from previous page.

Pillow Block Assembly[1]	Standard Shaft[2] Diam S-1	A	B	C	D	E		F	H
						Max.	Min.		
	in.	in.	in.	in.	in.	in.	in.	in.	in.
	2 13/16								
	2 7/8								
FSAF22617	**2 15/16**	**4 1/2**	**15 1/4**	**4 3/8**	**1 3/4**	**13 1/8**	**11 5/8**	**2 3/8**	**8 11/16**
	3								
	3 1/16								
	3 1/8								
SAF22618	**3 3/16**	**4 3/4**	**15 1/2**	**4 3/8**	**2**	**13 1/2**	**12**	**2 1/4**	**9 3/16**
	3 1/4								
	3 5/16								
	3 3/8								
SAF22620	**3 7/16**	**5 1/4**	**16 1/2**	**4 3/4**	**2 1/8**	**14 1/2**	**13 1/4**	**2 3/4**	**10 1/4**
	3 1/2								
	3 13/16								
	3 7/8								
SAF22622	**3 15/16**	**6**	**18 3/8**	**5 1/8**	**2 3/8**	**16**	**14 5/8**	**3 1/4**	**11 9/16**
	4								
	4 1/16								
	4 1/8								
SAF22624	**4 3/16**	**6 5/16**	**21 1/4**	**6 1/4**	**2 1/2**	**18 1/4**	**17**	**3 3/4**	**12 1/2**
	4 1/4								
	4 5/16								
	4 3/8								
SAF22626	**4 7/16**	**6 11/16**	**22**	**6 1/4**	**2 5/8**	**19 1/4**	**17 3/8**	**3 3/4**	**13 5/16**
	4 1/2								
	4 13/16								
	4 7/8								
SAF22628	**4 15/16**	**7 1/16**	**24 3/4**	**6 3/4**	**2 3/4**	**21 5/8**	**19 3/8**	**4 1/4**	**14 9/16**
	5								
	5 1/8								
SAF22630	**5 3/16**	**7 1/2**	**26 3/4**	**7 1/8**	**3**	**23 5/8**	**20 7/8**	**4 5/8**	**15 1/2**
	5 1/4								

[1]Bold shaft sizes are standard. When ordering non-standard pillow block assemblies specify the shaft size.
[2]See page page 160, table 32 for suggested shaft diameter S-1 tolerances.
[3]Includes sleeve, locknut and lockwasher. Add shaft size to order.
[4]"Housing Only" includes cap, base, cap bolts, triple-ring seals and stabilizing ring as required. When ordering non-standard housing only, specify the shaft size.
[5]Stabilizing ring used for fixed (FX) block; do not use for float (FL) mounting.

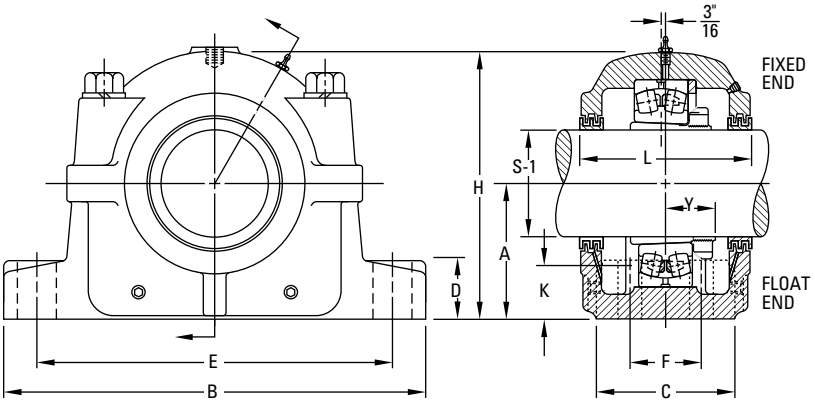

Oil Level K	L	Y	Base Bolts Required No.	Base Bolts Required Size	Bearing Number	Adapter Assembly Number[3]	Housing[4] Only	Stabilizing Ring[5] 1 Req'd	Triple Seal 2 Req'd	Assembly Weight
in.	in.	in.		in.						lbs.
						SNW-117 x 2 13/16			LER 182	
						SNW-117 x 2 7/8			LER 183	
1 13/16	**6 5/8**	**1 57/64**	**4**	**3/4**	**22317K**	**SNW-117 x 2 15/16**	**FSAF617**	**SR-20-17**	**LER 184**	**81**
						SNW-117 x 3			LER 185	
						SNW-118 x 3 1/16			LER 186	
						SNW-118 x 3 1/8			LER 187	
2	**7**	**2 3/64**	**4**	**3/4**	**22318K**	**SNW-118 x 3 3/16**	**SAF618**	**SR-21-18**	**LER 188**	**90**
						SNW-118 x 3 1/4			LER 189	
						SNW-120 x 3 5/16			LER 100	
						SNW-120 x 3 3/8			LER 101	
2 1/8	**7 3/8**	**2 19/64**	**4**	**3/4**	**22320K**	**SNW-120 x 3 7/16**	**SAF620**	**SR-24-20**	**LER 102**	**113**
						SNW-120 x 3 1/2			LER 103	
						SNW-122 x 3 13/16			LER 107	
						SNW-122 x 3 7/8			LER 108	
2 1/2	**8**	**2 31/64**	**4**	**7/8**	**22322K**	**SNW-122 x 3 15/16**	**SAF622**	**SR-0-22**	**LER 109**	**151**
						SNW-122 x 4			LER 110	
						SNW-124 x 4 1/16			LER 111	
						SNW-124 x 4 1/8			LER 112	
2 9/16	**8 3/8**	**2 41/64**	**4**	**1**	**22324K**	**SNW-124 x 4 3/16**	**SAF624**	**SR-0-24**	**LER 113**	**201**
						SNW-124 x 4 1/4			LER 114	
						SNW-126 x 4 5/16			LER 115	
						SNW-126 x 4 3/8			LER 116	
2 5/8	**8 3/4**	**2 27/32**	**4**	**1**	**22326K**	**SNW-126 x 4 7/16**	**SAF626**	**SR-0-26**	**LER 117**	**245**
						SNW-126 x 4 1/2			LER 118	
						SNW-126 x 4 9/16			LER 120	
						SNW-128 x 4 13/16			LER 121	
2 11/16	**9 3/8**	**3 5/64**	**4**	**1**	**22328K**	**SNW-128 x 4 7/8**	**SAF628**	**SR-0-28**	**LER 122**	**310**
						SNW-128 x 4 15/16			LER 123	
						SNW-130 x 5 1/8			LER 124	
2 7/8	**9 11/16**	**3 17/64**	**4**	**1**	**22330K**	**SNW-130 x 5 3/16**	**SAF630**	**SR-36-30**	**LER 125**	**350**
						SNW-130 x 5 1/4			LER 126	

Continued on next page.

INCH TAPERED BORE MOUNTING SAF225 AND SAF226 SERIES – *continued*

- The basic number for ordering complete pillow block assemblies is listed in the table below.
- Each assembly includes the housing cap and base, cap bolts, bearing, bearing adapter, locknut and lockwasher, stabilizing ring and triple-ring seals.
- If only the pillow block housing is desired, use the numbers listed in column headed "Housing Only." These units include cap, base, cap bolts, triple-ring seals and stabilizing ring.
- Assemblies and pillow blocks described on this page constitute a fixed unit. To order float units, specify the part number plus the suffix "Float" or "FL."
- Assemblies shown are furnished in cast iron. If cast steel is desired, add the letter "S" to the alpha prefix. If ductile iron is desired, add the letter D to the alpha prefix (e.g., SAFS 22515 or SAFD 22515).
- Four-bolt bases are standard on all assemblies unless as noted.
- If one end closed assembly is required, specify "CL" in assembly number when ordering.

Continued from previous page.

Pillow Block Assembly[1]	Standard Shaft[2] Diam S-1	A	B	C	D	E		F	H
						Max.	Min.		
	in.	in.	in.	in.	in.	in.	in.	in.	in.
SAF22632	5 3/8 **5 7/16** 5 1/2	**7 7/8**	**28**	**7 1/2**	**3 1/8**	**24 3/8**	**21 5/8**	**4 1/2**	**15 11/16**
SAF22634	5 13/16 5 7/8 **5 15/16** 6	**8 1/4**	**29 1/2**	**8**	**3 3/8**	**25**	**22 1/2**	**5**	**17 3/16**
SAF22636	**6 7/16**	**8 7/8**	**31 1/4**	**8 1/4**	**3 1/2**	**26 5/8**	**24**	**5 1/4**	**18 1/2**
SAF22638	6 13/16 6 7/8 **6 15/16** 7	**9 1/2**	**32 3/4**	**8 3/4**	**3 3/4**	**27 7/8**	**24 3/4**	**5 1/4**	**19 5/8**
SAF22640	7 1/8 **7 3/16** 7 1/4	**9 7/8**	**34 1/4**	**9**	**4**	**29 1/2**	**26 1/4**	**5 1/2**	**20 3/16**

[1]Bold shaft sizes are standard. When ordering non standard pillow block assemblies specify the shaft size.
[2]See page 160, table 32 for suggested shaft diameter S-1 tolerances.
[3]Includes sleeve, locknut and lockwasher. Add shaft size to order.
[4]"Housing Only" includes cap, base, cap bolts, triple-ring seals and stabilizing ring as required. When ordering non-standard housing only, specify the shaft size.
[5]Stabiling ring used for fixed (FX) block; do not use for float (FL) mounting.

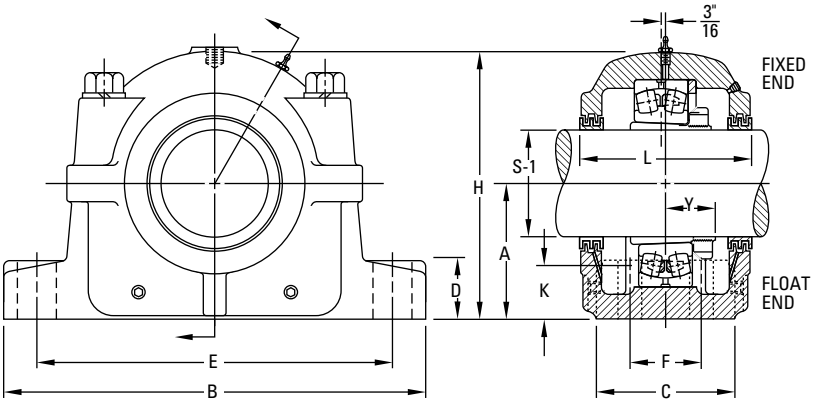

Oil Level K	L	Y	Base Bolts Required No.	Base Bolts Required Size	Bearing Number	Adapter Assembly Number[3]	Housing[4] Only	Stabilizing Ring[5] 1 Req'd	Triple Seal 2 Req'd	Assembly Weight
in.	in.	in.		in.						lbs.
2 15/16	**10 3/4**	**3 7/16**	**4**	**1 1/4**	**22332K**	SNW-132 x 5 3/8 **SNW-132 x 5 7/16** SNW-132 x 5 1/2	**SAF632**	**SR-38-32**	LER 129 **LER 130** LER 131	**420**
3 1/16	**10 13/16**	**3 19/32**	**4**	**1 1/4**	**22334K**	SNW-134 x 5 13/16 SNW-134 x 5 7/8 **SNW-134 x 5 15/16** SNW-134 x 6	**SAF634**	**SR-40-34**	LER 138 LER 139 **LER 140** LER 141	**485**
3 3/8	**11 1/4**	**3 47/64**	**4**	**1 1/4**	**22336K**	**SNW-136 x 6 7/16**	**SAF636**	**SR-0-36**	**LER 148**	**545**
3 11/16	**11 1/2**	**3 57/64**	**4**	**1 1/2**	**22338K**	SNW-138 x 6 13/16 SNW-138 x 6 7/8 **SNW-138 x 6 15/16** SNW-138 x 7	**SAF638**	**SR-44-38**	LER 153 LER 154 **LER 155** LER 156	**655**
3 3/4	**12 1/4**	**4 5/64**	**4**	**1 1/2**	**22340K**	SNW-140 x 7 1/8 **SNW-140 x 7 3/16** SNW-140 x 7 1/4	**SAF640**	**SR-0-40**	LER 158 **LER 159** LER 160	**725**

INCH TAPERED BORE MOUNTING SDAF225 AND SDAF226 SERIES

- Each assembly includes the housing cap and base, cap bolts, bearing, bearing adapter, locknut and lockwasher, stabilizing ring and triple-ring seals.
- To order pillow block housing only, use the number listed in the "Housing Only" column. These units include cap, base, cap bolts, triple-ring seals and stabilizing ring.
- Assemblies and pillow blocks described on this page constitute fixed units.
- To order float units, specify the part number plus the suffix "Float" or "FL."
- Assemblies shown are furnished in cast iron. If cast steel is desired, add the letter S to the alpha prefix. If ductile iron is desired, add the letter D to the alpha prefix (e.g., SAFS 22515 or SAFD 22515).

Pillow Block Assembly[1]	Diameter S-1[2]	A	B	C	D	E		F	H
						Max.	Min.		
	in.	in.	in.	in.	in.	in.	in.	in.	in.
SERIES SDAF225									
	3 3/8								
SDAF22520	**3 7/16**	**4 1/2**	**15 1/4**	**6**	**1 7/8**	**13 1/8**	**11 5/8**	**3 3/8**	**8 15/16**
	3 1/2								
	3 13/16								
	3 7/8								
SDAF22522	**3 15/16**	**4 15/16**	**16 1/2**	**6 3/4**	**2 1/8**	**14 1/2**	**12 5/8**	**4**	**9 7/8**
	4								
	4 1/16								
	4 1/8								
SDAF22524	**4 3/16**	**5 1/4**	**16 1/2**	**6 7/8**	**2 1/4**	**14 1/2**	**13 1/4**	**4 1/8**	**10 1/2**
	4 1/4								
	4 5/16								
	4 3/8								
SDAF22526	**4 7/16**	**6**	**18 3/8**	**7 1/2**	**2 3/8**	**16**	**14 5/8**	**4 1/2**	**11 7/8**
	4 1/2								
	4 13/16								
	4 7/8								
SDAF22528	**4 15/16**	**6**	**20 1/8**	**7 1/2**	**2 3/8**	**17 1/8**	**16**	**4 1/2**	**12 1/16**
	5								
	5 1/8								
SDAF22530	**5 3/16**	**6 5/16**	**21 1/4**	**7 7/8**	**2 1/2**	**18 1/4**	**17**	**4 3/4**	**12 13/16**
	5 1/4								
	5 3/8								
SDAF22532	**5 7/16**	**6 11/16**	**22**	**8 1/4**	**2 1/2**	**19 1/4**	**17 3/8**	**5**	**13 11/16**
	5 1/2								
SDAF22534	**5 15/16**	**7 1/16**	**24 3/4**	**9**	**2 1/2**	**21 5/8**	**19 3/8**	**5 1/2**	**14 1/4**
	6 5/16								
	6 3/8								
SDAF22536	**6 7/16**	**7 1/2**	**26 3/4**	**9 3/8**	**2 3/4**	**23 5/8**	**20 7/8**	**5 7/8**	**15 3/16**
	6 1/2								
SDAF22538	**6 15/16**	**7 7/8**	**27 5/8**	**10**	**3**	**23 1/2**	**21 1/2**	**6 1/4**	**16 1/4**
SDAF22540	**7 3/16**	**8 1/4**	**28 3/4**	**10 1/2**	**3 1/4**	**25**	**23**	**6 3/4**	**17 1/8**
SDAF22544	**7 15/16**	**9 1/2**	**32**	**11 1/4**	**3 1/2**	**27 7/8**	**25 5/8**	**7 1/4**	**19 1/4**

[1]Bold shaft sizes are standard. When ordering non-standard pillow block assemblies, specify the shaft size.
[2]See page 160, table 32 for suggested shaft diameter S-1 tolerances.
[3]Includes sleeve, locknut and lockwasher. Add shaft size to order.
[4]"Housing Only" includes cap, base, cap bolts, triple-ring seals and stabilizing ring as required. When ordering non-standard housing only specify the shaft size.
[5]Stabilizing ring used for fixed (FX) block; do not use for float (FL) mounting.

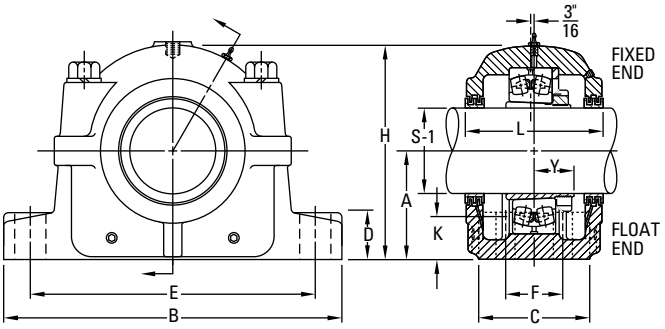

Oil Level K	L	Y	Base Bolts Required No.	Base Bolts Required Size	Bearing Number	Adapter Assembly Number(3)	Housing Only(4)	Stabilizing Ring(5) 1 Req'd	Triple Seal 2 Req'd	Assembly Weight
in.	in.	in.		in.						lbs.
						SNW-20 x 3 3/8			LER 74	
1 3/4	**6 3/4**	**1 49/64**	**4**	**3/4**	**22220K**	**SNW-20 x 3 7/16**	**SDAF520**	**SR-20-17**	**LER 75**	**81**
						SNW-20 x 3 1/2			LER 76	
						SNW-22 x 3 13/16			LER 91	
						SNW-22 x 3 7/8			LER 92	
1 7/8	**7 1/4**	**1 61/64**	**4**	**7/8**	**22222K**	**SNW-22 x 3 15/16**	**SDAF522**	**SR-22-19**	**LER 93**	**94**
						SNW-22 x 4			LER 94	
						SNW-24 x 4 1/16			LER 111	
						SNW-24 x 4 1/8			LER 112	
1 15/16	**7 3/8**	**2 3/32**	**4**	**7/8**	**22224K**	**SNW-24 x 4 3/16**	**SDAF524**	**SR-24-20**	**LER 113**	**137**
						SNW-24 x 4 1/4			LER 114	
						SNW-26 x 4 5/16			LER 115	
						SNW-26 x 4 3/8			LER 116	
2 7/16	**8**	**2 17/64**	**4**	**1**	**22226K**	**SNW-26 x 4 7/16**	**SDAF526**	**SR-26-0**	**LER 117**	**159**
						SNW-26 x 4 1/2			LER 118	
						SNW-28 x 4 13/16			LER 120	
						SNW-28 x 4 7/8			LER 121	
2 1/8	**7 13/16**	**2 13/32**	**4**	**1 1/8**	**22228K**	**SNW-28 x 4 15/16**	**SDAF528**	**SR-28-0**	**LER 122**	**189**
						SNW-28 x 5			LER 123	
						SNW-30 x 5 1/8			LER 124	
2 3/16	**8 3/8**	**2 37/64**	**4**	**1 1/8**	**22230K**	**SNW-30 x 5 3/16**	**SDAF530**	**SR-30-0**	**LER 125**	**225**
						SNW-30 x 5 1/4			LER 126	
						SNW-32 x 5 3/8			LER 129	
2 3/16	**8 3/4**	**2 49/64**	**4**	**1 1/8**	**22232K**	**SNW-32 x 5 7/16**	**SDAF532**	**SR-32-0**	**LER 130**	**300**
						SNW-32 x 5 1/2			LER 131	
2 5/16	**9 5/8**	**2 59/64**	**4**	**1 1/4**	**22234K**	**SNW-34 x 5 15/16**	**SDAF534**	**SR-34-0**	**LER 140**	**310**
						SNW-36 x 6 5/16			LER 146	
						SNW-36 x 6 3/8			LER 147	
2 9/16	**10**	**2 61/64**	**4**	**1 1/4**	**22236K**	**SNW-36 x 6 7/16**	**SDAF536**	**SR-36-30**	**LER 148**	**350**
						SNW-36 x 6 1/2			LER 149	
2 5/8	**10 5/8**	**3 7/64**	**4**	**1 3/8**	**22238K**	**SNW-38 x 6 15/16**	**SDAF538**	**SR-38-32**	**LER 224**	**420**
2 11/16	**11 1/8**	**3 9/32**	**4**	**1 3/8**	**22240K**	**SNW-40 x 7 3/16**	**SDAF540**	**SR-40-34**	**LER 228**	**545**
3 3/8	**11 7/8**	**3 17/32**	**4**	**1 1/2 1/4**	**22244K**	**SNW-44 x 7 15/16**	**SDAF544**	**SR-44-38**	**LER 236**	**665**

Continued on next page.

INCH TAPERED BORE MOUNTING SDAF225 AND SDAF226 SERIES – *continued*

- Each assembly includes the housing cap and base, cap bolts, bearing, bearing adapter, locknut and lockwasher, stabilizing ring and triple-ring seals.
- To order pillow block housing only, use the number listed in the "Housing Only" column. These units include cap, base, cap bolts, triple-ring seals and stabilizing ring.
- Assemblies and pillow blocks described on this page constitute fixed units.
- To order float units, specify the part number plus the suffix "Float" or "FL."
- Assemblies shown are furnished in cast iron. If cast steel is desired, add the letter S to the alpha prefix. If ductile iron is desired, add the letter D to the alpha prefix (e.g., SAFS 22515 or SAFD 22515).

Continued from previous page.

Pillow Block Assembly[1]	Diameter S-1[2]	A	B	C	D	E		F	H
						Max.	Min.		
	in.	in.	in.	in.	in.	in.	in.	in.	in.
SERIES SDAF226									
SDAF22617	2 7/8 **2 15/16** 3	**4 1/2**	**15 1/4**	**6**	**1 7/8**	**13 1/8**	**11 5/8**	**3 3/8**	**8 15/16**
SDAF22618	3 1/16 3 1/8 **3 3/16** 3 1/4	**4 3/4**	**15 1/2**	**6 1/8**	**2**	**13 1/2**	**12**	**3 5/8**	**9 7/16**
SDAF22620	3 5/16 3 3/8 **3 7/16** 3 1/2	**5 1/4**	**16 1/2**	**6 7/8**	**2 1/4**	**14 1/2**	**13 1/4**	**4 1/8**	**10 1/2**
SDAF22622	3 13/16 3 7/8 **3 15/16** 4	**6**	**18 3/8**	**7 1/2**	**2 3/8**	**16**	**14 5/8**	**4 1/2**	**11 7/8**
SDAF22624	4 1/16 4 1/8 **4 3/16** 4 1/4	**6 5/16**	**21 1/4**	**7 7/8**	**2 1/2**	**18 1/4**	**17**	**4 3/4**	**12 13/16**
SDAF22626	4 5/16 4 3/8 **4 7/16** 4 1/2 4 9/16	**6 11/16**	**22**	**8 1/4**	**2 1/2**	**19 1/4**	**17 3/8**	**5**	**13 11/16**
SDAF22628	**4 15/16**	**7 1/16**	**24 3/4**	**9**	**2 1/2**	**21 5/8**	**19 3/8**	**5 1/2**	**14 1/4**
SDAF22630	5 1/8 **5 3/16** 5 1/4 5 5/16 5 3/8	**7 1/2**	**26 3/4**	**9 3/8**	**2 3/4**	**23 5/8**	**20 7/8**	**5 7/8**	**15 3/16**
SDAF22632	**5 7/16**	**7 7/8**	**27 5/8**	**10**	**3**	**23 1/2**	**21 1/2**	**6 1/4**	**16 1/4**
SDAF22634	**5 15/16**	**8 1/4**	**28 3/4**	**10 1/2**	**3 1/4**	**25**	**23**	**6 3/4**	**17 1/8**
SDAF22636	**6 7/16**	**8 7/8**	**30 1/2**	**10 3/4**	**3 1/4**	**26 3/8**	**24 1/8**	**6 7/8**	**17 15/16**
SDAF22638	**6 15/16**	**9 1/2**	**32**	**11 1/4**	**3 1/2**	**27 7/8**	**25 5/8**	**7 1/4**	**19 1/4**
SDAF22640	**7 3/16**	**9 7/8**	**33 1/2**	**11 3/4**	**3 1/2**	**29 1/4**	**26 5/8**	**7 5/8**	**19 15/16**

[1]Bold shaft sizes are standard. When ordering non-standard pillow block assemblies, specify the shaft size.
[2]See page 160, table 32 for suggested shaft diameter S-1 tolerances.
[3]Includes sleeve, locknut and lockwasher. Add shaft size to order.
[4]"Housing Only" includes cap, base, cap bolts, triple-ring seals and stabilizing ring as required. When ordering non-standard housing only specify the shaft size.
[5]Stabilizing ring used for fixed (FX) block; do not use for float (FL) mounting.

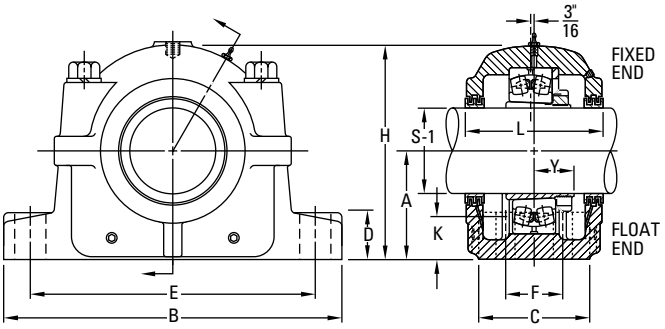

Oil Level K	L	Y	Base Bolts Required No.	Base Bolts Required Size	Bearing Number	Adapter Assembly Number[3]	Housing Only[4]	Stabilizing Ring[5] 1 Req'd	Triple Seal 2 Req'd	Assembly Weight
in.	in.	in.		in.						lbs.
						SNW-117 x 2 7/8			LER 58	
1 13/16	**6 3/4**	**1 57/64**	**4**	**3/4**	**22317K**	**SNW-117 x 2 15/16**	**SDAF617**	**SR-20-17**	**LER 59**	**94**
						SNW-117 x 3			LER 60	
						SNW-118 x 3 1/16			LER 67	
						SNW-118 x 3 1/8			LER 68	
2	**6 7/8**	**2 3/64**	**4**	**3/4**	**22318K**	**SNW-118 x 3 3/16**	**SDAF618**	**SR-21-18**	**LER 69**	**137**
						SNW-118 x 3 1/4			LER 70	
						SNW-120 x 3 5/16			LER 73	
						SNW-120 x 3 3/8			LER 74	
2 1/8	**7 3/8**	**2 19/64**	**4**	**7/8**	**22320K**	**SNW-120 x 3 7/16**	**SDAF620**	**SR-24-20**	**LER 75**	**159**
						SNW-120 x 3 1/2			LER 76	
						SNW-122 x 3 13/16			LER 91	
						SNW-122 x 3 7/8			LER 92	
2 1/2	**8**	**2 31/64**	**4**	**1**	**22322K**	**SNW-122 x 3 15/16**	**SDAF622**	**SR-0-22**	**LER 93**	**189**
						SNW-122 x 4			LER 94	
						SNW-124 x 4 1/16			LER 111	
						SNW-124 x 4 1/8			LER 112	
2 9/16	**8 3/8**	**2 41/64**	**4**	**1 1/8**	**22324K**	**SNW-124 x 4 3/16**	**SDAF624**	**SR-0-24**	**LER 113**	**225**
						SNW-124 x 4 1/4			LER 114	
						SNW-126 x 4 5/16			LER 115	
						SNW-126 x 4 3/8			LER 116	
2 5/8	**8 3/4**	**2 27/64**	**4**	**1 1/8**	**22326K**	**SNW-126 x 4 7/16**	**SDAF626**	**SR-0-26**	**LER 117**	**300**
						SNW-126 x 4 1/2			LER 118	
						SNW-126 x 4 9/16			LER 119	
2 11/16	**9 5/8**	**3 5/64**	**4**	**1 1/8**	**22328K**	**SNW-128 x 4 15/16**	**SDAF628**	**SR-0-28**	**LER 122**	**310**
						SNW-130 x 5 1/8			LER 124	
2 7/8	**9 3/4**	**3 17/64**	**4**	**1 1/4**	**22330K**	**SNW-130 x 5 3/16**	**SDAF630**	**SR-36-30**	**LER 125**	**395**
						SNW-130 x 5 1/4			LER 126	
						SNW-130 x 5 5/16			LER 127	
						SNW-130 x 5 3/8			LER 128	
2 15/16	**10 5/8**	**3 7/16**	**4**	**1 3/8**	**22332K**	**SNW-132 x 5 7/16**	**SDAF632**	**SR-38-32**	**LER 211**	**420**
3 1/16	**11 1/8**	**3 19/32**	**4**	**1 3/8**	**22334K**	**SNW-134 x 5 15/16**	**SDAF634**	**SR-40-34**	**LER 215**	**525**
3 7/8	**11 3/8**	**3 47/64**	**4**	**1 1/2**	**22336K**	**SNW-136 x 6 7/16**	**SDAF636**	**SR-0-36**	**LER 220**	**645**
3 11/16	**11 13/16**	**4 57/64**	**4**	**1 1/2**	**22338K**	**SNW-138 x 6 15/16**	**SDAF638**	**SR-44-38**	**LER 224**	**705**
3 3/4	**12 1/4**	**4 5/64**	**4**	**1 5/8**	**22340K**	**SNW-140 x 7 3/16**	**SDAF640**	**SR-0-40**	**LER 228**	**825**

INCH TAPERED BORE MOUNTING SAF230K AND SDAF230K SERIES

- Each assembly includes the housing cap and base, cap bolts, bearing, bearing adapter, locknut and lockwasher, stabilizing ring and triple-ring seals.
- If only the pillow block is desired, use the numbers listed in the "Housing Only" column. These units include cap and base, cap bolts, triple-ring seals and stabilizing ring.
- Assembly and pillow blocks described on this page constitute fixed units.
- To order float units, specify the part number plus the suffix "Float" or "FL."
- Assemblies shown are furnished in cast iron. If cast steel is desired, add the letter S to the alpha prefix. If ductile iron is desired, add the letter D to the alpha prefix (e.g., SAFS 23024 or SAFD 23024).
- Please note that for applications SAF23048 and larger, the shaft size must be included in the part description when ordering (e.g., SAF23048-8 15/16).
- Two stabilizing rings are supplied with housings SAF048 through SAF056 and SDAF060K through SDAF076K. For fixed applications both rings must be used. Do not use stabilizing rings for float mounting.

Pillow Block Assembly[1]	Diameter S-1[2]	A	B	C	D	E		F	H	Oil Level K
						Max.	Min.			
	in.	in.	in.	in.	in.	in.	in.	in.	in.	in.
SERIES SAF230K										
SAF23024K	4 1/16 4 1/8 **4 3/16** 4 1/4	**4 1/2**	**15 1/4**	**4 3/8**	**1 3/4**	**13 1/8**	**11 5/8**	**2 3/8**	**8 11/16**	**1 9/16**
SAF23026K	4 5/16 4 3/8 **4 7/16** 4 1/2	**4 15/16**	**16 1/2**	**4 3/4**	**2**	**14 1/2**	**12 5/8**	**2 3/4**	**9 9/16**	**1 11/16**
SAF23028K	4 13/16 4 7/8 **4 15/16** 5	**5 1/4**	**16 1/2**	**4 3/4**	**2 1/8**	**14 1/2**	**13 1/4**	**2 3/4**	**10 1/4**	**1 13/16**
SAF23030K	5 1/8 **5 3/16** 5 1/4	**6**	**18 3/8**	**5 1/8**	**2 3/8**	**16**	**14 5/8**	**3 1/4**	**11 9/16**	**2 5/16**
SAF23032K	5 3/8 **5 7/16** 5 1/2	**6**	**18 3/8**	**5 1/8**	**2 3/8**	**16**	**14 5/8**	**3 1/4**	**11 9/16**	**2 1/16**
SAF23034K	5 13/16 5 7/8 **5 15/16** 6	**6**	**20 1/8**	**5 7/8**	**2 3/8**	**17 1/8**	**16**	**3 3/8**	**11 3/4**	**1 3/4**
SAF23036K	6 5/16 6 3/8 **6 7/16** 6 1/2	**6 11/16**	**22**	**6 1/4**	**2 5/8**	**19 1/4**	**17 3/8**	**3 3/4**	**13 5/16**	**2 3/16**
SAF23038K	6 13/16 6 7/8 **6 15/16** 7	**6 11/16**	**22**	**6 1/4**	**2 5/8**	**19 1/4**	**17 3/8**	**3 3/4**	**13 5/16**	**1 15/16**
SAF23040K	7 1/8 **7 3/16** 7 1/4	**7 1/16**	**24 3/4**	**6 3/4**	**2 3/4**	**21 5/8**	**19 3/8**	**4 1/4**	**14 9/16**	**2 13/16**
SAF23044K	7 13/16 7 7/8 **7 15/16** 8	**7 7/8**	**28**	**7 1/2**	**3 1/8**	**24 3/8**	**21 5/8**	**4 1/2**	**15 11/16**	**2 3/8**

[1]Bold shaft sizes are standard. When ordering non-standard pillow block assemblies, specify shaft size.
[2]See page 160, table 32 for suggested shaft diameter S-1 tolerances.
[3]Includes sleeve, locknut and lockwasher. Add shaft size to order.
[4]"Housing Only" includes cap, base, cap bolts, triple-ring seals and stabilizing ring as required. When ordering non-standard housing only specify the shaft size.
[5]Stabilizing ring used for fixed (FX) block; do not use for float (FL) mounting.

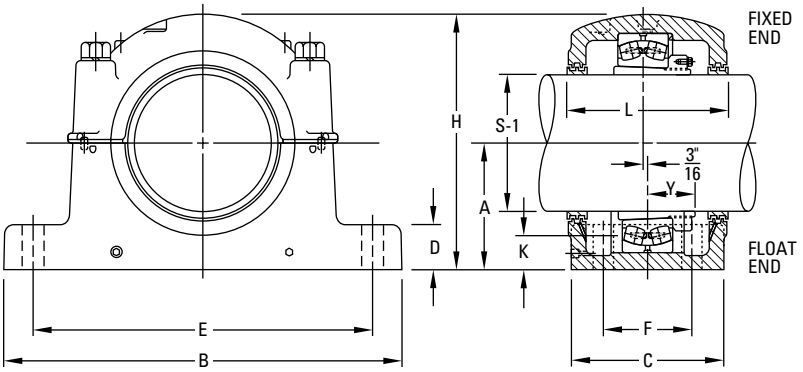

L	Y	Base Bolts 4 Req'd.	Bearing Number	Adapter Assembly Number[3]	Housing Only[4]	Stabilizing Ring[5] 1 Req'd	Triple Seal 2 Req'd	Assembly Weight
in.	in.	in.						lbs.
				SNW-3024 x 4 1/16			LER 111	
				SNW-3024 x 4 1/8			LER 112	
6	**1 55/64**	**3/4**	**23024K**	**SNW-3024 x 4 3/16**	**SAF024K**	**SR-20-17**	**LER 113**	**60**
				SNW-3024 x 4 1/4			LER 114	
				SNW-3026 x 4 5/16			LER 115	
				SNW-3026 x 4 3/8			LER 116	
6 3/8	**2 1/32**	**3/4**	**23026K**	**SNW-3026 x 4 7/16**	**SAF026K**	**SR-22-19**	**LER 117**	**76**
				SNW-3026 x 4 1/2			LER 118	
				SNW-3028 x 4 13/16			LER 120	
				SNW-3028 x 4 7/8			LER 121	
7 3/8	**2 1/8**	**3/4**	**23028K**	**SNW-3028 x 4 15/16**	**SAF028K**	**SR- 0-20**	**LER 122**	**90**
				SNW-3028 x 5			LER 123	
				SNW-3030 x 5 1/8			LER 124	
8	**2 13/64**	**7/8**	**23030K**	**SNW-3030 x 5 3/16**	**SAF030K**	**SR- 0-21**	**LER 125**	**125**
				SNW-3030 x 5 1/4			LER 126	
				SNW-3032 x 5 3/8			LER 129	
8	**2 11/32**	**7/8**	**23032K**	**SNW-3032 x 5 7/16**	**SAF032K**	**SR- 0-22**	**LER 130**	**132**
				SNW-3032 x 5 1/2			LER 131	
				SNW-3034 x 5 13/16			LER 138	
				SNW-3034 x 5 7/8			LER 139	
7 3/4	**2 33/64**	**1**	**23034K**	**SNW-3034 x 5 15/16**	**SAF034K**	**SR- 0-24**	**LER 140**	**154**
				SNW-3034 x 6			LER 141	
				SNW-3036 x 6 5/16			LER 146	
				SNW-3036 x 6 3/8			LER 147	
8 3/4	**2 11/16**	**1**	**23036K**	**SNW-3036 x 6 7/16**	**SAF036K**	**SR- 0-26**	**LER 148**	**212**
				SNW-3036 x 6 1/2			LER 149	
				SNW-3038 x 6 13/16			LER 153	
				SNW-3038 x 6 7/8			LER 154	
8 3/4	**2 47/64**	**1**	**23038K**	**SNW-3038 x 6 15/16**	**SAF038K**	**SR-32- 0**	**LER 155**	**220**
				SNW-3038 x 7			LER 156	
				SNW-3040 x 7 1/8			LER 158	
9 3/8	**2 15/16**	**1**	**23040K**	**SNW-3040 x 7 3/16**	**SAF040K**	**SR-34- 0**	**LER 159**	**295**
				SNW-3040 x 7 1/4			LER 160	
				SNW-3044 x 7 13/16			LER 165	
				SNW-3044 x 7 7/8			LER 166	
10 3/4	**3 5/32**	**1 1/4**	**23044K**	**SNW-3044 x 7 15/16**	**SAF044K**	**SR-38-32**	**LER 167**	**370**
				SNW-3044 x 8			LER 168	

Continued on next page.

INCH TAPERED BORE MOUNTING SAF230K AND SDAF230K SERIES – *continued*

- Each assembly includes the housing cap and base, cap bolts, bearing, bearing adapter, locknut and lockwasher, stabilizing ring and triple-ring seals.
- If only the pillow block is desired, use the numbers listed in the "Housing Only" column. These units include cap and base, cap bolts, triple-ring seals and stabilizing ring.
- Assembly and pillow blocks described on this page constitute fixed units.
- To order float units, specify the part number plus the suffix "Float" or "FL."
- Assemblies shown are furnished in cast iron. If cast steel is desired, add the letter S to the alpha prefix. If ductile iron is desired, add the letter D to the alpha prefix (e.g., SAFS 23024 or SAFD 23024).
- Please note that for applications SAF23048 and larger, the shaft size must be included in the part description when ordering (e.g., SAF23048-8 15/16).
- Two stabilizing rings are supplied with housings SAF048 through SAF056 and SDAF060K through SDAF076K. For fixed applications both rings must be used. Do not use stabilizing rings for float mounting.

Continued from previous page.

Pillow Block Assembly[1]	Diameter S-1[2]	A	B	C	D	E		F	H	Oil Level K
						Max.	Min.			
	in.	in.	in.	in.	in.	in.	in.	in.	in.	in.
SAF23048K-8 7/16	8 7/16	8 1/4	29 1/2	8	3 3/8	25	22 1/2	5	17 3/16	2 1/4
SAF23048K-8 1/2	8 1/2	8 1/4	29 1/2	8	3 3/8	25	22 1/2	5	17 3/16	2 1/4
SAF23048K-8 15/16	8 15/16	8 1/4	29 1/2	8	3 3/8	25	22 1/2	5	17 3/16	2 1/4
SAF23048K-9	9	8 1/4	29 1/2	8	3 3/8	25	22 1/2	5	17 3/16	2 1/4
SAF23052K-9 7/16	9 7/16	9 1/2	32 3/4	8 3/4	3 3/4	27 7/8	24 3/4	5 1/4	19 7/16	2 15/16
SAF23052K-9 1/2	9 1/2	9 1/2	32 3/4	8 3/4	3 3/4	27 7/8	24 3/4	5 1/4	19 7/16	2 15/16
SAF23056K-9 15/16	9 15/16	9 7/8	34 1/4	9	4	29 1/2	26 1/4	5 1/2	20 3/16	2 15/16
SAF23056K-10	10	9 7/8	34 1/4	9	4	29 1/2	26 1/4	5 1/2	20 3/16	2 15/16
SAF23056K-10 7/16	10 7/16	9 7/8	34 1/4	9	4	29 1/2	26 1/4	5 1/2	20 3/16	2 15/16
SAF23056K-10 1/2	10 1/2	9 7/8	34 1/4	9	4	29 1/2	26 1/4	5 1/2	20 3/16	2 15/16
SERIES SDAF230K										
SDAF23060K-10 15/16	10 15/16	12	38 1/4	14 3/4	3 1/2	33 1/2	32 3/4	9	23 7/16	4 7/16
SDAF23060K-11	11	12	38 1/4	14 3/4	3 1/2	33 1/2	32 3/4	9	23 7/16	4 7/16
SDAF23064K-11 7/16	11 7/16	12	38 1/4	14 3/4	3 1/2	33 1/2	32 3/4	9	23 7/16	4 1/16
SDAF23064K-11 1/2	11 1/2	12	38 1/4	14 3/4	3 1/2	33 1/2	32 3/4	9	23 7/16	4 1/16
SDAF23064K-11 15/16	11 15/16	12	38 1/4	14 3/4	3 1/2	33 1/2	32 3/4	9	23 7/16	4 1/16
SDAF23064K-12	12	12	38 1/4	14 3/4	3 1/2	33 1/2	32 3/4	9	23 7/16	4 1/16
SDAF23068K-12 7/16	12 7/16	12	39	15 1/4	4 3/16	33 1/2	32	10	24	3 7/16
SDAF23068K-12 1/2	12 1/2	12	39	15 1/4	4 3/16	33 1/2	32	10	24	3 7/16
SDAF23072K-12 15/16	12 15/16	12 13/16	41 3/4	15 3/4	4 1/2	36 1/2	35	10 1/2	26	3 7/8
SDAF23072K-13	13	12 13/16	41 3/4	15 3/4	4 1/2	36 1/2	35	10 1/2	26	3 7/8
SDAF23072K-13 7/16	13 7/16	12 13/16	41 3/4	15 3/4	4 1/2	36 1/2	35	10 1/2	26	3 7/8
SDAF23072K-13 1/2	13 1/2	12 13/16	41 3/4	15 3/4	4 1/2	36 1/2	35	10 1/2	26	3 7/8
SDAF23076K-13 15/16	13 15/16	12 13/16	41 3/4	15 3/4	4 1/2	36 1/2	35	10 1/2	26	3 7/16
SDAF23076K-14	14	12 13/16	41 3/4	15 3/4	4 1/2	36 1/2	35	10 1/2	26	3 7/16
SDAF23080K-15	15	14 1/2	46	17 1/8	5 1/4	40 3/4	39 1/4	11	29	4 7/16
SDAF23084K-15 3/4	15 3/4	14 1/2	46	17 1/8	5 1/4	40 3/4	39 1/4	11	29	4 1/16
SDAF23088K-16 1/2	16 1/2	15 1/2	48 3/4	18 3/4	5 1/2	43 1/2	41 3/4	12 1/4	30 1/2	4 1/2
SDAF23092K-17	17	15 1/2	48 3/4	18 3/4	5 1/2	43 1/2	41 3/4	12 1/4	30 1/2	4
SDAF23096K-18	18	17	53	21	5 1/2	46 1/8	44 3/8	14 1/2	33 3/4	5 1/8
SDAF230/530K-18 1/2	18 1/2	17	53	21	5 1/2	46 1/8	44 3/8	14 1/2	33 3/4	4 3/4
SDAF230/530K-19 1/2	19 1/2	18	54 1/4	21 5/8	5 3/4	48 7/8	47 1/8	15	35 3/4	4 13/16

[1]Bold shaft sizes are standard. When ordering non-standard pillow block assemblies, specify shaft size.
[2]See page 160, table 32 for suggested shaft diameter S-1 tolerances.
[3]Includes sleeve, locknut and lockwasher. Add shaft size to order.
[4]"Housing Only" includes cap, base, cap bolts, triple-ring seals and stabilizing ring as required. When ordering non-standard housing only specify the shaft size.
[5]Stabilizing ring used for fixed (FX) block; do not use for float (FL) mounting.

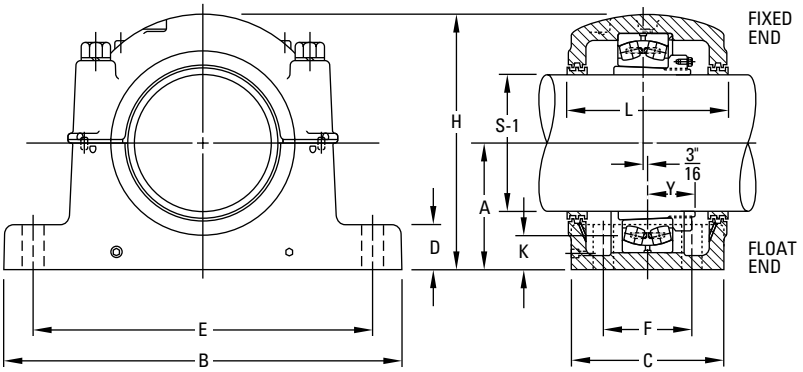

L	Y	Base Bolts 4 Req'd.	Bearing Number	Adapter Assembly Number[3]	Housing Only[4]	Stabilizing Ring[5] 1 Req'd	Triple Seal 2 Req'd	Assembly Weight
in.	in.	in.						lbs.
11 1/8	3 17/32	1 1/4	23048K	SNP-3048 x 8 7/16	SAF048K-8 7/16	A8897	LER 526	430
11 1/8	3 17/32	1 1/4	23048K	SNP-3048 x 8 1/2	SAF048K-8 1/2	A8897	LER 527	428
11 1/8	3 17/32	1 1/4	23048K	SNP-3048 x 8 15/16	SAF048K-8 15/16	A8897	LER 529	422
11 1/8	3 17/32	1 1/4	23048K	SNP-3048 x 9	SAF048K-9	A8897	LER 530	420
11 7/8	3 53/64	1 1/2	23052K	SNP-3052 x 9 7/16	SAF052K-9 7/16	A8898	LER 178-1	587
11 7/8	3 53/64	1 1/2	23052K	SNP-3052 x 9 1/2	SAF052K-9 1/2	A8898	LER 178	585
12 1/16	3 61/64	1 1/2	23056K	SNP-3056 x 10	SAF056K-9 15/16	A8819	ER 751	640
12 1/16	3 61/64	1 1/2	23056K	SNP-3056 x 10 7/16	SAF056K-10	A8819	ER705	635
12 1/16	3 61/64	1 1/2	23056K	SNP-3056 x 10 1/2	SAF056K-10 7/16	A8819	ER 745	625
12 1/16	3 61/64	1 1/2	23056K	SNP-3056 x 9 15/16	SAF056K-10 1/2	A8819	ER 710	620
15 1/2	4 9/32	1 5/8	23060K	SNP-3060 x 10 15/16	SDAF060K-10 15/16	A8967	ER 858	1175
15 1/2	4 9/32	1 5/8	23060K	SNP-3060 x 11	SDAF060K-11	A8967	ER 825	1174
15 1/2	4 7/16	1 5/8	23064K	SNP-3064 x 11 7/16	SDAF064K-11 7/16	A8968	ER 861	1275
15 1/2	4 7/16	1 5/8	23064K	SNP-3064 x 11 1/2	SDAF064K-11 1/2	A8968	ER 832	1274
15 1/2	4 7/16	1 5/8	23064K	SNP-3064 x 11 15/16	SDAF064K-11 15/16	A8968	ER 859	1269
15 1/2	4 7/16	1 5/8	23064K	SNP-3064 x 12	SDAF064K-12	A8968	ER 818	1268
15 3/4	4 13/16	1 7/8	23068K	SNP-3068 x 12 7/16	SDAF068K-12 7/16	A8969	ER 865	1553
15 3/4	4 13/16	1 7/8	23068K	SNP-3068 x 12 1/2	SDAF068K-12 1/2	A8969	ER 866	1552
16 1/4	4 53/64	1 7/8	23072K	SNP-3072 x 12 15/16	SDAF072K-12 15/16	A8970	ER 869	1632
16 1/4	4 53/64	1 7/8	23072K	SNP-3072 x 13	SDAF072K-13	A8970	ER 846	1630
16 1/4	4 53/64	1 7/8	23072K	SNP-3072 x 13 7/16	SDAF072K-13 7/16	A8970	ER 872	1614
16 1/4	4 53/64	1 7/8	23072K	SNP-3072 x 13 1/2	SDAF072K-13 1/2	A8970	ER 823	1610
16 1/4	5 1/16	1 7/8	23076K	SNP-3076 x 13 15/16	SDAF076K-13 15/16	A8971	ER 875	1687
16 1/4	5 1/16	1 7/8	23076K	SNP-3076 x 14	SDAF076K-14	A8971	ER 876	1685
17 5/8	5 17/32	4, 2	23080K	SNP-3080 x 15	SDAF080K-15	A8974	ER 847	2300
17 5/8	5 9/16	4, 2	23087K	SNP-3084 x 15 3/4	SDAF084K-15 3/4	A8978	ER 885	2300
19 1/4	5 3/4	4, 2 1/4	230994K	SNP-3088 x 16 1/2	SDAF3088K-16 1/2	A8979	ER 958	2550
19 1/4	5 7/8	4, 2 1/4	23082K	SNP-3092 x 17	SDAF3092K-17	A8980	ER 838	2850
21 3/4	5 29/32	4, 2 1/4	23096K	SNP-3096 x 18	SDAF3096K-18	A8984	ER 888	4250
21 3/4	6 1/2	4, 2 1/4	230/500K	SNP-30-500 x 18 1/2	SDAF30-500K-18 1/2	A8976	ER 978	4350
22 1/4	6 27/32	4, 2 1/2	230/530/K	SNP-30-530 x 19 1/2	SDAF 30-530K-19 1/2		ER 926	5200

INCH TAPERED BORE MOUNTING SDAF231K AND SDAF232K SERIES

- Each assembly includes the housing cap and base, cap bolts, bearing, bearing adapter, locknut and lockwasher, stabilizing ring and triple-ring seals.
- To order pillow block housing only, use the numbers listed in the "Housing Only" column. These units include cap and base, cap bolts, triple-ring seals and stabilizing ring.
- Assembly and pillow blocks described on this page constitute fixed units.
- To order float units, specify part number plus suffix "Float" or "FL."
- Assemblies shown are furnished in cast iron. If cast steel is desired, add the letter S to the alpha prefix. If ductile iron is desired, add the letter D to the alpha prefix (e.g., SDAFS 23152K or SDAFD 23152K).

Pillow Block Assembly	Diameter S-1[1]	A	B	C	D	E		F	H
						Max.	Min.		
	in.	in.	in.	in.	in.	in.	in.	in.	in.
SERIES SDAF231K									
SDAF23152K	**9 7/16** 9 1/2	**10 1/4**	**35**	**13 1/8**	**3 3/4**	**30 1/2**	**29**	**8 3/4**	**20 7/8**
SDAF23156K	9 15/16 10 **10 7/16** 10 1/2	**12**	**38 1/4**	**14 3/4**	**3 3/8**	**33 1/2**	**32 3/4**	**9**	**23 7/16**
SDAF23160K	**10 15/16**	**12**	**38 1/4**	**14 3/4**	**3 3/8**	**33 1/2**	**32 3/4**	**9**	**23 7/16**
SDAF23164K	11 **11 15/16**	**12 13/16**	**41 3/4**	**15 3/4**	**4 1/2**	**36 1/2**	**35**	**10 1/2**	**25 3/4**
SDAF23168K	**12 7/16**	**14**	**43 3/4**	**17 3/4**	**5**	**38 1/4**	**36 3/4**	**10 3/4**	**27 7/8**
SDAF23172K	**13 7/16** 13 1/2	**14 1/2**	**46**	**17 1/8**	**5 1/4**	**40 3/4**	**39 1/4**	**11**	**28 7/8**
SDAF23176K	**13 15/16** 14	**14 1/2**	**46**	**17 1/8**	**5 1/4**	**40 3/4**	**39 1/4**	**11**	**28 7/8**
SDAF23180K	14 15/16 **15**	**15 1/2**	**48 3/4**	**18 3/4**	**5 1/2**	**43 1/2**	**41 3/4**	**12 1/4**	**30 1/2**
SDAF23184K	**15 3/4**	**17**	**52**	**21**	**5 1/2**	**46 1/8**	**44 3/8**	**14 1/2**	**33 3/4**
SDAF23188K	**16 1/2**	**17**	**52**	**21**	**5 1/2**	**46 1/8**	**44 3/8**	**14 1/2**	**33 3/4**
SDAF23192K	**17**	**18**	**54 1/4**	**21 5/8**	**5 3/4**	**48 7/8**	**47 1/8**	**15**	**35 3/4**
SDAF23196K	**18**	**18**	**54 1/4**	**21 5/8**	**5 3/4**	**48 7/8**	**47 1/8**	**15**	**35 3/4**
SERIES SDAF232K									
SDAF23248K	**8 15/16** 9	**10 1/4**	**35**	**13 1/8**	**3 3/4**	**30 1/2**	**29**	**8 3/4**	**20 7/8**
SDAF23252K	**9 7/16** 9 1/2	**12**	**38 1/4**	**14 3/4**	**3 3/8**	**33 1/2**	**32 3/4**	**9**	**23 7/16**
SDAF23256K	**10 7/16** 10 1/2	**12**	**38 1/4**	**14 3/4**	**3 3/8**	**33 1/2**	**32 3/4**	**9**	**23 7/16**
SDAF23260K	**10 15/16** 11	**12 13/16**	**41 3/4**	**15 3/4**	**4 1/2**	**36 1/2**	**35**	**10 1/2**	**25 3/4**
SDAF23264K	**11 15/16**	**14**	**43 3/4**	**17 3/4**	**5**	**38 1/4**	**36 3/4**	**10 3/4**	**27 7/8**
SDAF23268K	**12 7/16**	**14 1/2**	**46**	**17 1/8**	**5 1/4**	**40 3/4**	**39 1/4**	**11**	**28 7/8**
SDAF23272K	**13 7/16**	**15 1/2**	**48 3/4**	**18 3/4**	**5 1/2**	**43 1/2**	**41 3/4**	**12 1/4**	**30 1/2**
SDAF23276K	**13 15/16**	**15 1/2**	**48 3/4**	**18 3/4**	**5 1/2**	**43 1/2**	**41 3/4**	**12 1/4**	**30 1/2**
SDAF23280K	**14 15/16**	**17**	**52**	**21**	**5 1/2**	**46 1/8**	**44 3/8**	**14 1/2**	**33 3/4**
SDAF23284K	**15 3/4**	**18**	**54 1/4**	**21 5/8**	**5 3/4**	**48 7/8**	**47 1/8**	**15**	**35 3/4**
SDAF23288K	**16 1/2**	**18**	**54 1/4**	**21 5/8**	**5 3/4**	**48 7/8**	**47 1/8**	**15**	**35 3/4**

[1]See page 160, table 32 for suggested shaft diameter S-1 tolerances.
[2]Includes sleeve, locknut and lockwasher. Add shaft size to order.
[3]"Housing Only" includes cap, base, cap bolts, triple-ring seals and stabilizing ring as required. When ordering non-standard housing only specify the shaft size.
[4]Stabilizing ring used for fixed (FX) block; do not use for float (FL) mounting.

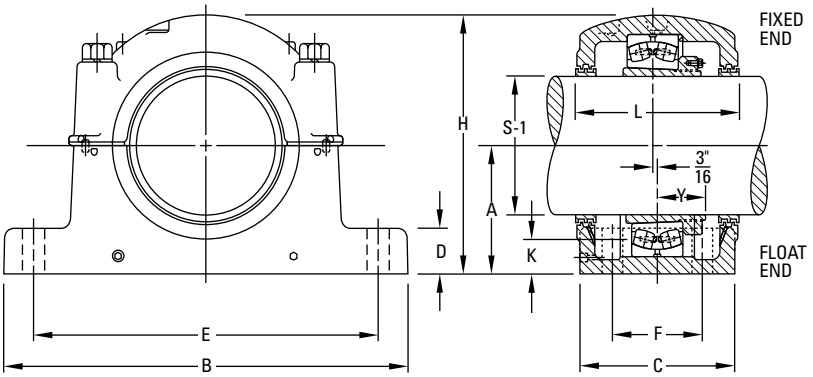

Oil Level K	L	Base Bolts 4 Req'd.	Bearing Number	Adapter Assembly Number[2]	Housing Only[3]	Stabilizing Ring[4] 1 Req'd	Triple Seal 2 Req'd	Assembly Weight
in.	in.	in.						lbs.
3 3/8	**13 3/4**	**1 5/8**	**23152K**	**SNP-3152 x 9 7/16**	**SDAF3152K**	**A5679**	**ER 891**	**1050**
				SNP-3152 x 9 1/2			ER 842	
				SNP-3156 x 9 15/16			ER 845	
				SNP-3156 x 10			ER 820	
4 3/4	**15 3/8**	**1 5/8**	**23156K**	**SNP-3156 x 10 7/16**	**SDAF3156K**	**A8967**	**ER 973**	**1300**
				SNP-3156 x 10 1/2			ER 840	
4 1/8	**15 3/8**	**1 5/8**	**23160K**	**SNP-3160 x 10 15/16**	**SDAF3160K**	**A8975**	**ER 858**	**1350**
				SNP-3160 x 11			ER 825	
4 3/8	**16 1/4**	**1 7/8**	**23164K**	**SNP-3164 x 11 15/16**	**SDAF3164K**	**A8970**	**ER 900**	**1900**
4 15/16	**18 1/4**	**2**	**23168K**	**SNP-3168 x 12 7/16**	**SDAF3168K**	**A8977**	**ER 975**	**2550**
5	**17 3/4**	**2**	**23172K**	**SNP-3172 x 13 7/16**	**SDAF3172K**	**A8974**	**ER 872**	**2600**
				SNP-3172 x 13 1/2			ER 823	
4 5/8	**17 3/4**	**2**	**23176K**	**SNP-3176 x 13 15/16**	**SDAF3176K**	**A8978**	**ER 875**	**2600**
				SNP-3176 x 14			ER 876	
				SNP-3180 x 14 15/16			ER 976	
5 1/8	**19 1/4**	**2 1/4**	**23180K**	**SNP-3180 x 15**	**SDAF3180K**	**A8979**	**ER 847**	**3000**
6	**21 3/4**	**2 1/4**	**23184K**	**SNP-3184 x 15 3/4**	**SDAF3184K**	**A8984**	**ER 907**	**4400**
5 9/16	**21 3/4**	**2 1/4**	**23188K**	**SNP-3188 x 16 1/2**	**SDAF3188K**	**A8976**	**ER 958**	**4600**
6	**22 1/4**	**2 1/2**	**23192K**	**SNP-3192 x 17**	**SDAF3192K**	**A8990**	**ER 838**	**5100**
5 1/2	**22 1/4**	**2 1/2**	**23196K**	**SNP-3196 x 18**	**SDAF3196K**	**A8998**	**ER 888**	**5200**
3 9/16	**13 3/4**	**1 5/8**	**23248K**	**SNP-148 x 8 15/16**	**SDAF3248K**	**A5679**	**ER 914**	**1100**
				SNP-148 x 9			ER 828	
4 3/4	**15 3/8**	**1 5/8**	**23252K**	**SNP-152 x 9 7/16**	**SDAF3252K**	**A8968**	**ER 891**	**1400**
				SNP-152 x 9 1/2			ER 842	
4 3/8	**15 3/8**	**1 5/8**	**23256K**	**SNP-3256 x 10 7/16**	**SDAF3256K**	**A8975**	**ER 973**	**1400**
				SNP-3256 x 10 1/2			ER 840	
4 1/2	**16 1/4**	**1 7/8**	**23260K**	**SNP-3260 x 10 15/16**	**SDAF3260K**	**A8970**	**ER 974**	**1900**
				SNP-3260 x 11			ER 974-1	
5 1/8	**18 1/4**	**2**	**23264K**	**SNP-3264 x 11 15/16**	**SDAF3264K**	**A8977**	**ER 900**	**2600**
5	**17 3/4**	**2**	**23268K**	**SNP-3268 x 12 7/16**	**SDAF3268K**	**A8978**	**ER 975**	**2700**
5 1/2	**19 1/4**	**2 1/4**	**23272K**	**SNP-3272 x 13 7/16**	**SDAF3272K**	**A8979**	**ER 979**	**3050**
4 3/8	**19 1/4**	**2 1/4**	**23276K**	**SNP-3276 x 13 15/16**	**SDAF3276K**	**A8980**	**ER 875**	**3000**
6	**21 3/4**	**2 1/4**	**23280K**	**SNP-3280 x 14 15/16**	**SDAF3280K**	**A8976**	**ER976**	**4650**
6 3/8	**22 1/4**	**2 1/2**	**23284K**	**SNP-3284 x 15 3/4**	**SDAF3284K**	**A8990**	**ER 907**	**4900**
5 7/8	**22 1/4**	**2 1/2**	**23288K**	**SNP-3288 x 16 1/2**	**SDAF3288K**	**A8988**	**ER 907**	**5200**

INCH STRAIGHT BORE MOUNTING SAF222 AND SAF223 SERIES

- Each assembly includes the housing cap and base, cap bolts, bearing, locknut and lockwasher, stabilizing ring and triple-ring seals.
- To order pillow block housing only, use the numbers listed in "Housing Only" column. These units include cap and base, cap bolts, triple-ring seals and stabilizing ring.
- Assembly and pillow blocks described on this page constitute fixed units.
- To order float units, specify part number plus suffix "Float" or "FL."
- Assemblies shown are furnished in cast iron. If cast steel is desired, add the letter S to the alpha prefix. If ductile iron is desired, add the letter D to the alpha prefix (e.g., SAFS 22217 or SAFD 22217).
- Four-bolt bases are standard on all assemblies, unless noted.

Pillow Block Assembly	Diameter[1]		A	B	C	D	E		F	H	Oil Level K	L	Y	Base Bolts Required	
	S-2	S-3					Max.	Min.						No.	Size
	in.	in.	in.	in.	in.	in.	in.	in.	in.	in.	in.	in.	in.		in.
SERIES SAF222															
SAF22217	3 15/16	3 3/16	3 3/4	13	3 1/2	1 1/4	11	9 7/8	–	7 1/4	1 7/16	4 15/16	1 27/64	2	3/4
FSAF22217	3 15/16	3 3/16	3 3/4	13	3 1/2	1 1/4	11	9 7/8	2 1/8	7 1/4	1 7/16	4 15/16	1 27/64	4	5/8
SAF22218	4 1/8	3 3/8	4	13 3/4	3 7/8	1 1/2	11 5/8	10 3/8	–	7 3/4	1 17/32	6 1/4	1 37/64	2	3/4
FSAF22218	4 1/8	3 3/8	4	13 3/4	3 7/8	1 1/2	11 5/8	10 3/8	2 1/8	7 3/4	1 17/32	6 1/4	1 37/64	4	5/8
SAF22220	4 1/2	3 13/16	4 1/2	15 1/4	4 3/8	1 3/4	13 1/8	11 5/8	–	8 11/16	1 3/4	6	1 49/64	2	7/8
FSAF22220	4 1/2	3 13/16	4 1/2	15 1/4	4 3/8	1 3/4	13 1/8	11 5/8	2 3/8	8 11/16	1 3/4	6	1 49/64	4	3/4
SAF22222	4 7/8	4 3/16	4 15/16	16 1/2	4 3/4	2	14 1/2	12 5/8	2 3/4	9 9/16	1 7/8	6 3/8	1 61/64	4	3/4
SAF22224	5 5/16	4 9/16	5 1/4	16 1/2	4 3/4	2 1/8	14 1/2	13 1/4	2 3/4	10 1/4	1 15/16	7 3/8	2 3/32	4	3/4
SAF22226	5 7/8	4 15/16	6	18 3/8	5 1/8	2 3/8	16	14 5/8	3 1/4	11 9/16	2 7/16	8	2 17/64	4	7/8
SAF22228	6 1/4	5 5/16	6	20 1/8	5 7/8	2 3/8	17 1/8	16	3 3/8	11 3/4	2 1/8	7 3/4	2 13/32	4	1
SAF22230	6 5/8	5 3/4	6 5/16	21 1/4	6 1/4	2 1/2	18 1/4	17	3 3/4	12 1/2	2 3/16	8 3/8	2 37/64	4	1
SAF22232	7	6 1/16	6 11/16	22	6 1/4	2 5/8	19 1/4	17 3/8	3 3/4	13 5/16	2 3/16	8 3/4	2 49/64	4	1
SAF22234	7 7/16	6 7/16	7 1/16	24 3/4	6 3/4	2 3/4	21 5/8	19 3/8	4 1/4	14 9/16	2 5/16	9 3/8	2 59/64	4	1
SAF22236	7 13/16	6 7/8	7 1/2	26 3/4	7 1/8	3	23 5/8	20 7/8	4 5/8	15 1/2	2 9/16	9 11/16	2 61/64	4	1
SAF22238	8 3/8	7 1/4	7 7/8	28	7 1/2	3 1/8	24 3/8	21 5/8	4 1/2	15 11/16	2 5/8	10 3/4	3 7/64	4	1 1/4
SAF22240	8 3/4	7 5/8	8 1/4	29 1/2	8	3 3/8	25	22 1/2	5	17 3/16	2 11/16	10 13/16	3 9/32	4	1 1/4
SAF22244	9 9/16	8 5/16	9 1/2	32 3/4	8 3/4	3 3/4	27 7/8	24 3/4	5 1/4	19 5/8	3 3/8	11 1/2	3 17/32	4	1 1/2
SERIES SAF223															
SAF22317	3 15/16	3 3/16	4 1/2	15 1/4	4 3/8	1 3/4	13 1/8	11 5/8	–	8 11/16	1 13/16	6	1 57/64	2	7/8
FSAF22317	3 15/16	3 3/16	4 1/2	15 1/4	4 3/8	1 3/4	13 1/8	11 5/8	2 3/8	8 11/16	1 13/16	6	1 57/64	4	3/4
SAF22318	4 1/8	3 3/8	4 3/4	15 1/2	4 3/8	2	13 1/2	12	2 1/4	9 3/16	2	7	2 3/64	4	3/4
SAF22320	4 1/2	3 13/16	5 1/4	16 1/2	4 3/4	2 1/8	14 1/2	13 1/4	2 3/4	10 1/4	2 1/8	7 3/8	2 19/64	4	3/4
SAF22322	4 7/8	4 3/16	6	18 3/8	5 1/8	2 3/8	16	14 5/8	3 1/4	11 9/16	2 1/2	8	2 31/64	4	7/8
SAF22324	5 5/16	4 9/16	6 5/16	21 1/4	6 1/4	2 1/2	18 1/4	17	3 3/4	12 1/2	2 9/16	8 3/8	2 41/64	4	1
SAF22326	5 7/8	4 15/16	6 11/16	22	6 1/4	2 5/8	19 1/4	17 3/8	3 3/4	13 15/16	2 5/8	8 3/4	2 27/32	4	1
SAF22328	6 1/4	5 5/16	7 1/16	24 3/4	6 3/4	2 3/4	21 5/8	19 3/8	4 1/4	14 9/16	2 11/16	9 3/8	3 5/64	4	1
SAF22330	6 5/8	5 3/4	7 1/2	26 3/4	7 1/8	3	23 5/8	20 7/8	4 5/8	15 1/2	2 7/8	9 11/16	3 17/64	4	1
SAF22332	7	6 1/16	7 7/8	28	7 1/2	3 1/8	24 3/8	21 5/8	4 1/2	15 11/16	2 15/16	10 3/4	3 7/16	4	1 1/4
SAF22334	7 7/16	6 7/16	8 1/4	29 1/2	8	3 3/8	25	22 1/2	5	17 3/16	3 1/16	10 13/16	3 19/32	4	1 1/4
SAF22336	7 13/16	6 7/8	8 7/8	31 1/4	8 1/4	3 1/2	26 5/8	24	5 1/4	18 1/2	3 3/8	11 1/4	3 47/64	4	1 1/4
SAF22338	8 3/8	7 1/4	9 1/2	32 3/4	8 3/4	3 3/4	27 7/8	24 3/4	5 1/4	19 5/8	3 11/16	11 1/2	3 57/64	4	1 1/2
SAF22340	8 3/4	7 5/8	9 7/8	34 1/4	9	4	29 1/2	26 1/4	5 1/2	20 3/16	3 3/4	12 1/4	4 5/64	4	1 1/2

[1]See page 160, table 32 for suggested shaft diameter S-2, S-3 tolerances.
[2]"Housing Only" includes cap, base, cap bolts, triple-ring seals and stabilizing rings as required.
[3]Stabilizing ring used for fixed (FX) block; do not use for float (FL) mounting.
[4]Triple-ring seals for other shaft diameters are available upon special order.

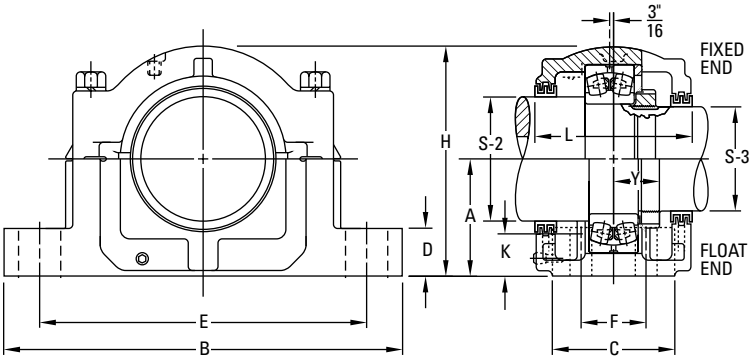

Bearing Number	Locknut	Lockwasher	Housing Only[2]	Stabilizing Ring[3] 1 Req'd	Triple Seal 1 Req'd[4]		Assembly Weight
					S-2	S-3	
							lbs.
22217	AN17	W17	SAF217	SR-17-14	LER89	LER63	43
22217	AN17	W17	FSAF217	SR-17-14	LER89	LER63	43
22218	AN18	W18	SAF218	SR-18-15	LER96	LER72	50
22218	AN18	W18	FSAF218	SR-18-15	LER96	LER72	50
22220	AN20	W20	SAF220	SR-20-17	LER118	LER106	71
22220	AN20	W20	FSAF220	SR-20-17	LER118	LER106	71
22222	AN22	W22	SAF222	SR-22-19	LER121	LER113	81
22224	AN24	W24	SAF224	SR-24-20	LER127	LER119	90
22226	AN26	W26	SAF226	SR-26-0	LER136	LER122	127
22228	AN28	W28	SAF228	SR-28-0	LER144	LER127	149
22230	AN30	W30	SAF230	SR-30-0	LER151	LER134	175
22232	AN32	W32	SAF232	SR-32-0	LER156	LER142	210
22234	AN34	W34	SAF234	SR-34-0	LER161	LER148	280
22236	AN36	W36	SAF236	SR-36-30	LER165	LER154	305
22238	AN38	W38	SAF238	SR-38-32	LER171	LER160	350
22240	AN40	W40	SAF240	SR-40-34	LER175	LER164	420
22244	N44	W44	SAF244	SR-44-38	LER179	LER170	590
22317	AN17	W17	SAF317	SR-20-17	LER109	LER188	80
22317	AN17	W17	FSAF317	SR-20-17	LER109	LER188	80
22318	AN18	W18	SAF318	SR-21-18	LER112	LER191	92
22320	AN20	W20	SAF320	SR-24-20	LER118	LER106	109
22322	AN22	W22	SAF322	SR-0-22	LER121	LER113	145
22324	AN24	W24	SAF324	SR-0-24	LER127	LER119	195
22326	AN26	W26	SAF326	SR-0-26	LER136	LER122	235
22328	AN28	W28	SAF328	SR-0-28	LER144	LER127	300
22330	AN30	W30	SAF330	SR-36-30	LER151	LER134	335
22332	AN32	W32	SAF332	SR-38-32	LER156	LER142	405
22334	AN34	W34	SAF334	SR-40-34	LER161	LER148	465
22336	AN36	W36	SAF336	SR-0-36	LER165	LER154	525
22338	AN38	W38	SAF338	SR-44-38	LER171	LER160	635
22340	AN40	W40	SAF340	SR-0-40	LER175	LER164	700

INCH STRAIGHT BORE MOUNTING SDAF222 AND SDAF223 SERIES

- Each assembly includes the housing cap and base, cap bolts, bearing, locknut and washer, stabilizing ring, and triple-ring seals.
- To order pillow block housing only, use the numbers listed in the "Housing Only" column. These units include cap and base, cap bolts, triple-ring seals and stabilizing ring.
- Assembly and pillow blocks described on this page constitute fixed units.
- To order float units, specify part number plus suffix "Float" or "FL."
- Assemblies shown are furnished in cast iron. If cast steel is desired, add the letter S to the alpha prefix. If ductile iron is desired, add the letter D to the alpha prefix (e.g., SDAS 22220 or SDAD 22220).

Pillow Block Assembly	Diameter[1]		A	B	C	D	E		F	H	Oil Level K	L	Y	Base Bolts Required	
	S-2	S-3					Max.	Min.						No.	Size
	in.	in.	in.	in.	in.	in.	in.	in.	in.	in.	in.	in.	in.		in.
SERIES SDAF222															
SDAF22220	4 1/2	3 13/16	4 1/2	15 1/4	6	1 7/8	13 1/8	11 5/8	3 3/8	8 15/16	1 3/4	6 3/4	1 49/64	4	3/4
SDAF22222	4 7/8	4 3/16	4 15/16	16 1/2	6 3/4	2 1/8	14 1/2	12 5/8	4	9 7/8	1 7/8	7 1/4	1 61/64	4	7/8
SDAF22224	5 5/16	4 9/16	5 1/4	16 1/2	6 7/8	2 1/4	14 1/2	13 1/4	4 1/8	10 1/2	1 15/16	7 3/8	2 3/32	4	7/8
SDAF22226	5 7/8	4 15/16	6	18 3/8	7 1/2	2 3/8	16	14 5/8	4 1/2	11 7/8	2 7/16	8	2 17/64	4	1
SDAF22228	6 1/4	5 5/16	6	20 1/8	7 1/2	2 3/8	17 1/8	16	4 1/2	12 1/16	2 1/8	7 13/16	2 13/32	4	1
SDAF22230	6 5/8	5 3/4	6 5/16	21 1/4	7 7/8	2 1/2	18 1/4	17	4 3/4	12 13/16	2 3/16	8 3/8	2 37/64	4	1 1/8
SDAF22232	7	6 1/16	6 11/16	22	8 1/4	2 1/2	19 1/4	17 3/8	5	13 11/16	2 3/16	8 3/4	2 49/64	4	1 1/8
SDAF22234	7 7/16	6 7/16	7 1/16	24 3/4	9	2 1/2	21 5/8	19 3/8	5 1/2	14 1/4	2 5/16	9 5/8	2 59/64	4	1 1/4
SDAF22236	7 13/16	6 7/8	7 1/2	26 3/4	9 3/8	2 3/4	23 5/8	20 7/8	5 7/8	15 3/16	2 9/16	10	2 61/64	4	1 1/4
SDAF22238	8 3/8	7 1/4	7 7/8	27 5/8	10	3	23 1/2	21 1/2	6 1/4	16 1/4	2 5/8	10 5/8	3 7/64	4	1 3/8
SDAF22240	8 3/4	7 5/8	8 1/4	28 3/4	10 1/2	3 1/4	25	23	6 3/4	17 1/8	2 11/16	11 1/8	3 9/32	4	1 3/8
SDAF22244	9 9/16	8 5/16	9 1/2	32	11 1/4	3 1/2	27 7/8	25 5/8	7 1/4	19 1/4	3 3/8	11 7/8	3 17/32	4	1 1/2
SERIES SDAF223															
SDAF22317	3 15/16	3 3/16	4 1/2	15 1/4	6	1 7/8	13 1/8	11 5/8	3 3/8	8 15/16	1 3/16	6 3/4	1 57/64	4	3/4
SDAF22318	4 1/8	3 3/8	4 3/4	15 1/2	6 1/8	2	13 1/2	12	3 5/8	9 7/16	2	6 7/8	2 3/64	4	3/4
SDAF22320	4 1/2	3 13/16	5 1/4	16 1/2	6 7/8	2 1/4	14 1/2	13 1/4	4 1/8	10 1/2	2 1/8	7 3/8	2 19/64	4	7/8
SDAF22322	4 7/8	4 3/16	6	18 3/8	7 1/2	2 3/8	16	14 5/8	4 1/2	11 7/8	2 1/2	8	2 31/64	4	1
SDAF22324	5 5/16	4 9/16	6 5/16	21 1/4	7 7/8	2 1/2	18 1/4	17	4 3/4	12 13/16	2 9/16	8 3/8	2 41/64	4	1 1/8
SDAF22326	5 7/8	4 15/16	6 11/16	22	8 1/4	2 1/2	19 1/4	17 3/8	5	13 11/16	2 5/8	8 3/4	2 27/64	4	1 1/8
SDAF22328	6 1/4	5 5/16	7 1/16	24 3/4	9	2 1/2	21 5/8	19 3/8	5 1/2	14 1/4	2 11/16	9 5/8	3 5/64	4	1 1/4
SDAF22330	6 5/8	5 3/4	7 1/2	26 3/4	9 3/8	2 3/4	23 5/8	20 7/8	5 7/8	15 3/16	2 7/8	9 3/4	3 17/64	4	1 1/4
SDAF22332	7	6 1/16	7 7/8	27 5/8	10	3	23 1/2	21 1/2	6 1/4	16 1/4	2 15/16	10 5/8	3 7/16	4	1 3/8
SDAF22334	7 7/16	6 7/16	8 1/4	28 3/4	10 1/2	3 1/4	25	23	6 3/4	17 1/8	3 1/16	11 1/8	3 19/32	4	1 3/8
SDAF22336	7 13/16	6 7/8	8 7/8	30 1/2	10 3/4	3 1/4	26 3/8	24 1/8	6 7/8	17 15/16	3 3/8	11 3/8	3 47/64	4	1 1/2
SDAF22338	8 3/8	7 1/4	9 1/2	32	11 1/4	3 1/2	27 7/8	25 5/8	7 1/4	19 1/4	3 11/16	11 13/16	3 57/64	4	1 1/2
SDAF22340	8 3/4	7 5/8	9 7/8	33 1/2	11 3/4	3 1/2	29 1/4	26 5/8	7 5/8	19 15/16	3 3/4	12 1/4	4 5/64	4	1 5/8

[1]See page 160, table 32 for suggested shaft diameter S-2, S-3 tolerances.
[2]"Housing Only" includes cap, base, cap bolts, triple-ring seals and stabilizing rings as required.
[3]Stabilizing ring used for fixed (FX) block; do not use for float (FL) mounting.
[4]Triple-ring seals for other shaft diameters are available upon special order.

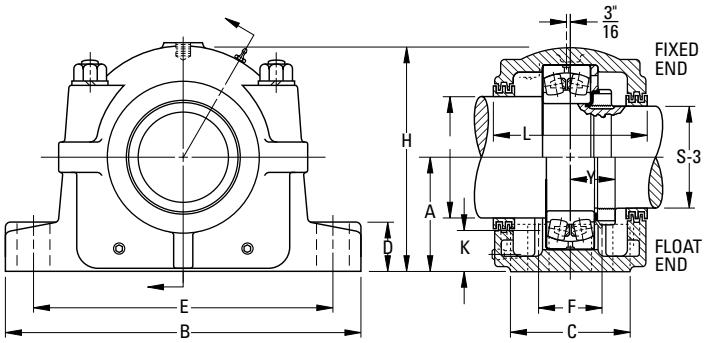

Bearing Number	Locknut	Lockwasher	Housing Only[2]	Stabilizing Ring[3] 1 Req'd	Triple Seal 1 Req'd[4]		Assembly Weight
					S-2	S-3	
							lbs.
22220	AN20	W20	SDAF220	SR-20-17	LER118	LER106	81
22222	AN22	W22	SDAF222	SR-22-19	LER121	LER113	109
22224	AN24	W24	SDAF224	SR-24-20	LER127	LER119	113
22226	AN26	W26	SDAF226	SR-26-0	LER136	LER122	151
22228	AN28	W28	SDAF228	SR-28-0	LER144	LER127	175
22230	AN30	W30	SDAF230	SR-30-0	LER151	LER134	201
22232	AN32	W32	SDAF232	SR-32-0	LER156	LER142	245
22234	AN34	W34	SDAF234	SR-34-0	LER161	LER148	300
22236	AN36	W36	SDAF236	SR-36-30	LER165	LER154	335
22238	AN38	W38	SDAF238	SR-38-32	LER240	LER229	405
22240	AN40	W40	SDAF240	SR-40-34	LER244	LER233	465
22244	N44	W44	SDAF244	SR-44-38	LER248	LER239	650
22317	AN17	W17	SDAF317	SR-20-17	LER109	LER188	80
22318	AN18	W18	SDAF318	SR-21-18	LER112	LER191	92
22320	AN20	W20	SDAF320	SR-24-20	LER118	LER106	109
22322	AN22	W22	SDAF322	SR-0-22	LER121	LER113	145
22324	AN24	W24	SDAF324	SR-0-24	LER127	LER119	195
22326	AN26	W26	SDAF326	SR-0-26	LER136	LER122	280
22328	AN28	W28	SDAF328	SR-0-28	LER144	LER127	305
22330	AN30	W30	SDAF330	SR-36-30	LER151	LER134	375
22332	AN32	W32	SDAF332	SR-38-32	LER225	LER217	445
22334	AN34	W34	SDAF334	SR-40-34	LER230	LER220	525
22336	AN36	W36	SDAF336	SR-0-36	LER234	LER223	635
22338	AN38	W38	SDAF338	SR-44-38	LER240	LER229	700
22340	AN40	W40	SDAF340	SR-0-40	LER244	LER233	725

INCH STRAIGHT BORE MOUNTING SDAF231 AND SDAF232 SERIES

- Each assembly includes the housing cap and base, cap bolts, bearing, locknut and washer, stabilizing ring and triple-ring seals.
- To order pillow block housing only, use the numbers listed in the "Housing Only" column. These units include cap and base, cap bolts, triple-ring seals and stabilizing ring.
- Assembly and pillow blocks described on this page constitute fixed units.
- To order float units, specify part number plus suffix "Float" or "FL."
- Assemblies shown are furnished in cast iron. If cast steel is desired, add the letter S to the alpha prefix. If ductile iron is desired, add the letter D to the alpha prefix (e.g., SDAFS 23152 or SDAFD 23152).
- For fixed applications, both stabilizing rings must be used. Do not use stabilizing rings for "Float" mounting.

Pillow Block Assembly	Diameter[1]		A	B	C	D	E		F	H	Oil Level K	L
	S-2	S-3					Max.	Min.				
	in.	in.	in.	in.	in.	in.	in.	in.	in.	in.	in.	in.
SERIES SDAF231												
SDAF23152	11 ½	9 15/16	10 ¼	35	13 ⅛	3 ¾	30 ½	29	8 ¾	20 ⅞	3 ⅜	14 ¼
SDAF23156	12 ½	10 ¾	12	38 ¼	14 ¾	3 ⅜	33 ½	32 ¾	9	23 7/16	4 ¾	15 ⅞
SDAF23160	13	11 ½	12	38 ¼	14 ¾	3 ⅜	33 ½	32 ¾	9	23 7/16	4 ⅛	15 ⅞
SDAF23164	14	12 ¼	12 13/16	41 ¾	15 ¾	4 ½	36 ½	35	10 ½	25 ¾	4 ⅜	16 ¾
SDAF23168	15	13	14	43 ¾	17 ¾	5	38 ¼	36 ¾	10 ¾	27 ⅞	4 15/16	18 ¾
SDAF23172	16	13 ¾	14 ½	46	17 ⅛	5 ¼	40 ¾	39 ¼	11	28 ⅞	5	18
SDAF23176	17	14 ½	14 ½	46	17 ⅛	5 ¼	40 ¾	39 ¼	11	28 ⅞	4 ⅝	18
SDAF23180	17 ½	15 ¼	15 ½	48 ¾	18 ¾	5 ½	43 ½	41 ¾	12 ¼	30 ½	5 ⅛	19 ¾
SDAF23184	18 ½	15 ¾	17	52	21	5 ½	46 ⅛	44 ⅜	14 ½	33 ¾	6	22 ¼
SDAF23188	19 ½	17	17	52	21	5 ½	46 ⅛	44 ⅜	14 ½	33 ¾	5 9/16	22 ¼
SDAF23192	20	17 ¾	18	54 ¼	21 ⅝	5 ¾	48 ⅞	47 ⅛	15	35 ¾	6	22 ¾
SERIES SDAF232												
SDAF23248	10 ½	9 3/16	10 ¼	35	13 ⅛	3 ¾	30 ½	29	8 ¾	20 ⅞	3 9/16	14 ¼
SDAF23252	11 ½	9 15/16	12	38 ¼	14 ¾	3 ⅜	33 ½	32 ¾	9	23 7/16	4 ¾	15 ⅞
SDAF23256	12 ½	10 ¾	12	38 ¼	14 ¾	3 ⅜	33 ½	32 ¾	9	23 7/16	4 ⅜	15 ⅞
SDAF23260	13	11 ½	12 13/16	41 ¾	15 ¾	4 ½	36 ½	35	10 ½	25 ¾	4 ½	16 ¾
SDAF23264	14	12 ¼	14	43 ¾	17 ¾	5	38 ¼	36 ¾	10 ¾	27 ⅞	5 ⅛	18 ¾
SDAF23268	15	13	14 ½	46	17 ⅛	5 ¼	40 ¾	39 ¼	11	28 ⅞	5	18
SDAF23272	16	13 ¾	15 ½	48 ¾	18 ¾	5 ½	43 ½	41 ¾	12 ¼	30 ½	5 ½	19 ¾
SDAF23276	17	14 ½	15 ½	48 ¾	18 ¾	5 ½	43 ½	41 ¾	12 ¼	30 ½	4 ⅜	19 ¾
SDAF23280	17 ½	15 ¼	17	52	21	5 ½	46 ⅛	44 ⅜	14 ½	33 ¾	6	22 ¼
SDAF23284	18 ½	15 ¾	18	54 ½	21 ⅝	5 ¾	48 ⅞	47 ⅛	15	35 ¾	6 ⅜	22 ¾
SDAF23288	19 ½	17	18	54 ½	21 ⅝	5 ¾	48 ⅞	47 ⅛	15	35 ¾	5 ⅞	22 ¾

[1]See page 160, table 32 for suggested shaft diameter S-2, S-3 tolerances.
[2]"Housing Only" includes cap, base, cap bolts, triple-ring seals and stabilizing rings as required.
[3]Stabilizing ring used for fixed (FX) block; do not use for float (FL) mounting.
[4]Triple-ring seals for other shaft diameters are available upon special order.

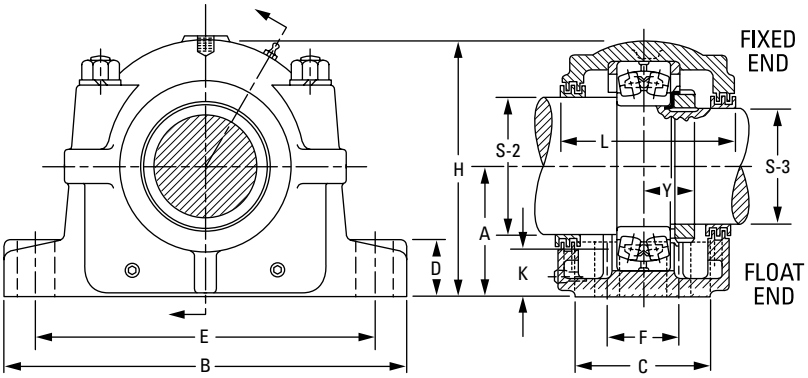

4 Base Bolts Req'd	Bearing Number	Locknut	Lockwasher	Housing Only[2]	Stabilizing Ring[3] 1 Req'd	Triple Seal 1 Req'd[4]		Assembly Weight
						S-2	S-3	
in.								lbs.
1 5/8	23152	N052	P52	SDAF3152	A5679	ER832	ER845	1050
1 5/8	23156	N056	P56	SDAF3156	A8967	ER866	ER826	1250
1 5/8	23160	N060	P60	SDAF3160	A8975	ER824	ER832	1350
1 7/8	23164	N064	P64	SDAF3164	A8970	ER876	ER983	1850
2	23168	N068	P68	SDAF3168	A8977	ER847	ER846	2450
2	23172	N072	P72	SDAF3172	A8974	ER809	ER874	2500
2	23176	N076	P76	SDAF3176	A8978	ER811	ER950	2500
2 1/4	23180	N080	P80	SDAF3180	A8979	ER967	ER895	2800
2 1/4	23184	N084	P84	SDAF3184	A8984	ER978	ER907	4300
2 1/4	23188	N088	P88	SDAF3188	A8976	ER926	ER838	4300
2 1/2	23192	N092	P92	SDAF3192	A8990	ER808	ER906	5000
1 5/8	23248	N048	P48	SDAF3248	A5679	ER840	ER923	1100
1 5/8	23252	N052	P52	SDAF3252	A8968	ER832	ER845	1350
1 5/8	23256	N056	P56	SDAF3256	A8975	ER866	ER826	1400
1 7/8	23260	N060	P60	SDAF3260	A8970	ER846	ER856	1900
2	23264	N064	P64	SDAF3264	A8977	ER876	ER983	2500
2	23268	N068	P68	SDAF3268	A8978	ER847	ER846	2650
2 1/4	23272	N072	P72	SDAF3272	A8979	ER965	ER981	2950
2 1/4	23276	N076	P76	SDAF3276	A8980	ER838	ER984	3050
2 1/4	23280	N080	P80	SDAF3280	A8976	ER967	ER895	4500
2 1/2	23284	N084	P84	SDAF3284	A8990	ER978	ER907	5000
2 1/2	23288	N088	P88	SDAF3288	A8988	ER926	ER838	5050

INCH SHAFT DIAMETERS

TABLE 32. SUGGESTED S-1, S-2, S-3 INCH SHAFT DIAMETERS

Diameter	Max.	Min.
1 7/16	1.4375	1.4345
1 11/16	1.6875	1.6845
1 7/8	1.8750	1.8720
1 15/16	1.9375	1.9345
2 1/16	2.0625	2.0585
2 1/8	2.1250	2.1210
2 3/16	2.1875	2.1835
2 1/4	2.2500	2.2460
2 3/8	2.3750	2.3710
2 7/16	2.4375	2.4335
2 9/16	2.5625	2.5585
2 5/8	2.6250	2.6210
2 11/16	2.6875	2.6835
2 13/16	2.8125	2.8085
2 7/8	2.8750	2.8710
2 15/16	2.9375	2.9335
3	3.0000	2.9960
3 1/16	3.0625	3.0585
3 3/16	3.1875	3.1835
3 1/4	3.2500	3.2460
3 3/8	3.3750	3.3710
3 7/16	3.4375	3.4335
3 5/8	3.6250	3.6210
3 15/16	3.9375	3.9335
4 1/8	4.1250	4.1200
4 3/16	4.1875	4.1825
4 7/16	4.4375	4.4325
4 1/2	4.5000	4.4950
4 9/16	4.5625	4.5575
4 7/8	4.8750	4.8700
4 15/16	4.9375	4.9325
5 3/16	5.1875	5.1825
5 5/16	5.3125	5.3075
5 7/16	5.4375	5.4325
5 3/4	5.7500	5.7450
5 7/8	5.8750	5.8700
5 15/16	5.9375	5.9325
6 1/16	6.0625	6.0575
6 1/4	6.2500	6.2450
6 7/16	6.4375	6.4325
6 5/8	6.6250	6.6200
6 7/8	6.8750	6.8700
6 15/16	6.9375	6.9325
7	7.0000	6.9950
7 3/16	7.1875	7.1825

Diameter	Max.	Min.
7 1/4	7.2500	7.2450
7 7/16	7.4375	7.4325
7 5/8	7.6250	7.6200
7 13/16	7.8125	7.8075
7 15/16	7.9375	7.9325
8 5/16	8.3125	8.3065
8 3/8	8.3750	8.3690
8 7/16	8.4375	8.4315
8 1/2	8.5000	8.4940
8 3/4	8.7500	8.7440
8 15/16	8.9375	8.9315
9	9.0000	8.9940
9 7/16	9.4375	9.4315
9 1/2	9.5000	9.4940
9 9/16	9.5625	9.5565
9 15/16	9.9375	9.9315
10	10.0000	9.9940
10 7/16	10.4375	10.4305
10 1/2	10.5000	10.4930
10 15/16	10.9375	10.9305
11	11.0000	10.9930
11 7/16	11.4375	11.4305
11 1/2	11.5000	11.4930
11 15/16	11.9375	11.9305
12	12.0000	11.9930
12 7/16	12.4375	12.4295
12 1/2	12.5000	12.4920
12 15/16	12.9375	12.9295
13	13.0000	12.9920
13 7/16	13.4375	13.4295
13 1/2	13.5000	13.4920
13 15/16	13.9375	13.9295
14	14.0000	13.9920
15	15.0000	14.9920
16	16.0000	15.9920
17	17.0000	16.9920
17 1/2	17.5000	17.4920
18 1/2	18.5000	18.4920
19 1/2	19.5000	19.4920
20	20.0000	19.9920

INCH TU TAKE-UP UNITS

- The same care taken in the selection of stationary pillow blocks also must be applied to selecting the proper take-up unit.
- Load requirements should be carefully evaluated before specifying a particular Timken take-up assembly.
- The pedestal is made of stress-relieved cast iron. End bases are made of ductile iron. The guide rail and screw are steel.
- Units are available with travel lengths from 12 to 36 inch, in 6-inch increments.
- Catalog numbers shown here are for the TU take-up unit only; pillow block assemblies must be ordered separately.
- Both two- and four-bolt pedestals are available and must be specified.

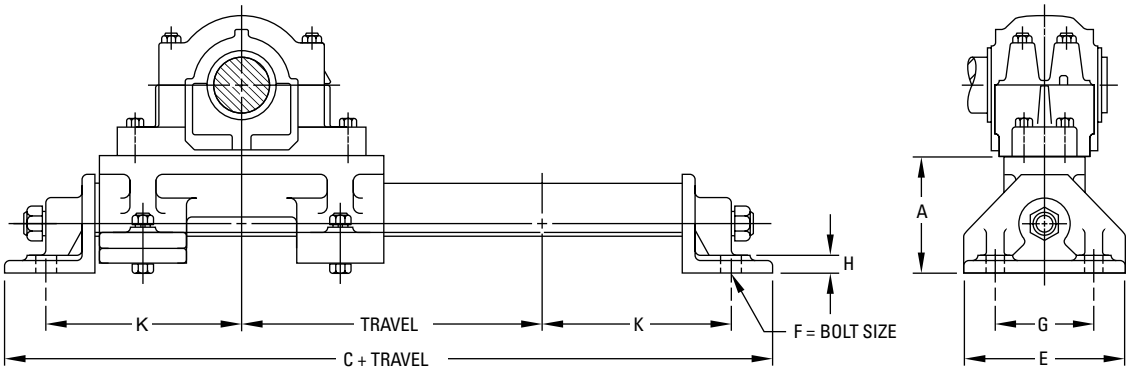

TU Take-Up Unit Catalog Number[1]	Pillow Block Housing Number (SAF or SDAF)			Travel	A	C	E	Bolt Size F	G	H	K
				in.	in.	in.	in.	in.	in.	in.	in.
TU-3x12	515L	–	–	12	4 7/8	20	6 1/2	5/8	4	3/4	8 1/4
TU -3x24	515L	–		24	4 7/8	20	6 1/2	5/8	4	3/4	8 1/4
TU-4x18	516L	–	517L	18	5	21 3/4	6 1/2	3/4	4	3/4	9 1/8
TU -4x24	516L	–	517L	24	5	21 3/4	6 1/2	3/4	4	3/4	9 1/8
TU-5x24	518L		615L	24	5 1/4	23	7 1/2	3/4	5	3/4	9 3/4
TU -6x12	520L	–	617L	12	5 1/2	24 3/4	7 1/2	3/4	5	7/8	10 3/4
TU-6x18	520L	–	617L	18	5 1/2	24 3/4	7 1/2	3/4	5	7/8	10 3/4
TU -6x24	520L		617L	24	5 1/2	24 3/4	7 1/2	3/4	5	7/8	10 3/4
TU-6x36	520L		617L	36	5 1/2	24 3/4	7 1/2	3/4	5	7/8	10 3/4
TU -7x12	522L	524L	620L	12	6	26	9	3/4	6 1/2	1	11 1/2
TU-7x18	522L	524L	620L	18	6	26	9	3/4	6 1/2	1	11 1/2
TU -7x24	522L	524L	620L	24	6	26	9	3/4	6 1/2	1	11 1/2
TU-7x30	522L	524L	620L	30	6	26	9	3/4	6 1/2	1	11 1/2
TU -8x12	526L		622L	12	6	28	9	3/4	6 1/2	1	12 1/2
TU-8x18	526L			18	6	28	9	3/4	6 1/2	1	12 1/2
TU -8x30	526L			30	6	28	9	3/4	6 1/2	1	12 1/2
TU-8x-1x18	528L	–	–	18	6	29 1/2	9	3/4	6 1/2	1	13 1/4

[1]Enter 12, 18, 24, 30 or 36 to indicate travel in inches.

INCH TTU TAKE-UP UNITS

- The same care taken in the selection of stationary pillow blocks also must be applied to selecting the proper take-up unit.
- Load requirements should be carefully evaluated before specifying a particular take-up assembly.
- Frame assembly and adjusting screw of TTU units are made of steel.
- The bearing housing is cast iron. Steel or ductile iron housings are additional options.
- Units include housing for adapter-mounted bearings only, for either fixed or float position (be sure to specify).
- One stabilizing ring is included for fixed-position assemblies.
- Sealing is triple-ring labyrinth or end closures.
- For extremely contaminated environments, the DUSTAC seal is suggested. See page 164 for more information.
- Bearings and mounting accessories sold separately.

Take-Up Unit and Frame No. (Travel in Bold)	Diameter S-1[1]	A	B	C	D	E	F	Bolt Size G	H	L	N	R	T
	in.	in.	in.	in.	in.	in.	in.	in.	in.	in.	in.	in.	
TTU-55-**12**	1 15/16	4 5/8	28 1/2	3 1/2	1 3/4	26 1/2	–	5/8	9	4	3/4	7 1/4	4
TTU-55-**18**		4 5/8	34 1/2	3 1/2	1 3/4	32 1/2	–	5/8	9	4	3/4	7 1/4	4
TTU-55-**24**		4 5/8	40 1/2	3 1/2	1 3/4	38 1/2	–	5/8	9	4	3/4	7 1/4	4
TTU-65-**12**	2 3/16	5	29 1/2	3 1/2	1 3/4	27 1/2	–	5/8	10	4 1/2	3/4	7 3/4	4
TTU-65-**18**		5	35 1/2	3 1/2	1 3/4	33 1/2	–	5/8	10	4 1/2	3/4	7 3/4	4
TTU-65-**24**		5	41 1/2	3 1/2	1 3/4	39 1/2	–	5/8	10	4 1/2	3/4	7 3/4	4
TTU-75-**6**	2 7/16	5 3/16	24 1/2	3 1/2	1 3/4	22 1/2	–	3/4	10 1/2	4 1/2	7/8	8 1/4	4
TTU-75-**12**		5 3/16	30 1/2	3 1/2	1 3/4	28 1/2	–	3/4	10 1/2	4 1/2	7/8	8 1/4	4
TTU-75-**18**		5 3/16	36 1/2	3 1/2	1 3/4	34 1/2	–	3/4	10 1/2	4 1/2	7/8	8 1/4	4
TTU-75-**24**		5 3/16	42 1/2	3 1/2	1 3/4	40 1/2	–	3/4	10 1/2	4 1/2	7/8	8 1/4	4
TTU-75-**30**		5 3/16	48 1/2	3 1/2	1 3/4	46 1/2	–	3/4	10 1/2	4 1/2	7/8	8 1/4	4
TTU-85-**6**	2 15/16	6	26 1/2	4 5/8	2	24 1/2	2	5/8	12 1/4	4 3/4	1	9 1/4	5
TTU-85-**12**		6	32 1/2	4 5/8	2	30 1/2	2	5/8	12 1/4	4 3/4	1	9 1/4	5
TTU-85-**18**		6	38 1/2	4 5/8	2	36 1/2	2	5/8	12 1/4	4 3/4	1	9 1/4	5
TTU-85-**24**		6	44 1/2	4 5/8	2	42 1/2	2	5/8	12 1/4	4 3/4	1	9 1/4	5
TTU-85-**30**		6	50 1/2	4 5/8	2	48 1/2	2	5/8	12 1/4	4 3/4	1	9 1/4	5
TTU-100-**12**	3 7/16	6 5/8	34 1/4	4 5/8	2	32	2	3/4	13 7/8	6	1 1/8	10	5 1/2
TTU-100-**18**		6 5/8	40 1/4	4 5/8	2	38	2	3/4	13 7/8	6	1 1/8	10	5 1/2
TTU-100-**24**		6 5/8	46 1/4	4 5/8	2	44	2	3/4	13 7/8	6	1 1/8	10	5 1/2
TTU-100-**30**		6 5/8	52 1/4	4 5/8	2	50	2	3/4	13 7/8	6	1 1/8	10	5 1/2
TTU-110-**12**	3 15/16	7 3/4	38 1/2	5 5/8	2 1/4	36	2 1/2	3/4	16 1/4	6 1/2	1 1/4	12	7
TTU-110-**18**		7 3/4	44 1/2	5 5/8	2 1/4	42	2 1/2	3/4	16 1/4	6 1/2	1 1/4	12	7
TTU-110-**24**		7 3/4	50 1/2	5 5/8	2 1/4	48	2 1/2	3/4	16 1/4	6 1/2	1 1/4	12	7
TTU-110-**30**		7 3/4	56 1/2	5 5/8	2 1/4	54	2 1/2	3/4	16 1/4	6 1/2	1 1/4	12	7
TTU-110-**36**		7 3/4	62 1/2	5 5/8	2 1/4	60	2 1/2	3/4	16 1/4	6 1/2	1 1/4	12	7
TTU-130-**12**	4 7/16	8 5/8	45 3/4	8 3/4	2 3/4	40 3/4	5	1 1/8	18 7/8	7 1/4	2	14 3/8	10
TTU-130-**18**		8 5/8	51 3/4	8 3/4	2 3/4	46 3/4	5	1 1/8	18 7/8	7 1/4	2	14 3/8	10
TTU-130-**24**		8 5/8	57 3/4	8 3/4	2 3/4	52 3/4	5	1 1/8	18 7/8	7 1/4	2	14 3/8	10
TTU-130-**30**		8 5/8	63 3/4	8 3/4	2 3/4	58 3/4	5	1 1/8	18 7/8	7 1/4	2	14 3/8	10
TTU-140-**12**	4 15/16	9 1/2	49 1/2	9 3/4	3	44 1/2	5 1/2	1 1/4	20 3/8	7 1/2	2 1/4	16 1/4	11
TTU-140-**18**		9 1/2	55 1/2	9 3/4	3	50 1/2	5 1/2	1 1/4	20 3/8	7 1/2	2 1/4	16 1/4	11
TTU-140-**24**		9 1/2	61 1/2	9 3/4	3	56 1/2	5 1/2	1 1/4	20 3/8	7 1/2	2 1/4	16 1/4	11
TTU-140-**30**		9 1/2	67 1/2	9 3/4	3	62 1/2	5 1/2	1 1/4	20 3/8	7 1/2	2 1/4	16 1/4	11

[1]See page 120, table 28 for suggested shaft diameter S-1 tolerances.
[2]Includes sleeve, locknut and lockwasher. Add shaft size to order.
[3]Stabilizing ring is used for fixed (FX) block; do not use for float (FL) mounting.
Note: Speed ratings are found in dimension tables on pages 62-88.

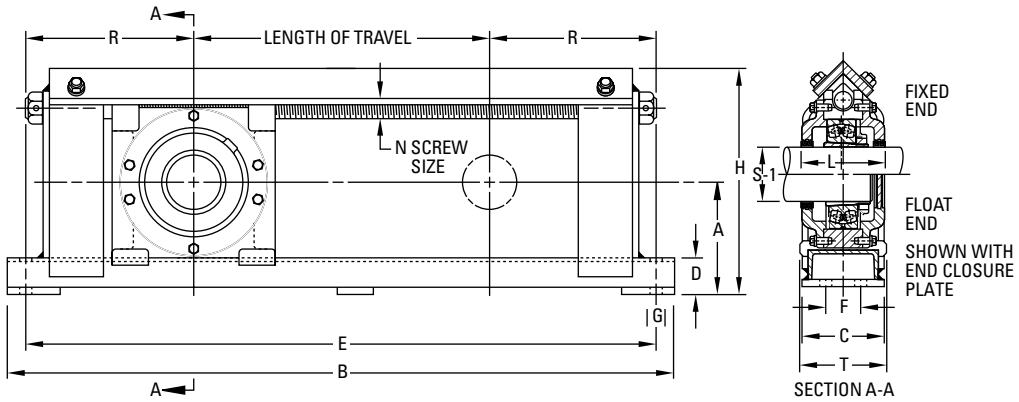

Bearing Number	Adapter Assembly Number[2]	Stabilizing Ring[3] 1 Req'd	Triple Seal 2 Req'd	Approx. Weight
				lbs.
22211K	SNW-11	SR-11-0	LER24	55
22211K	SNW-11	SR-11-0	LER24	60
22211K	SNW-11	SR-11-0	LER24	65
22213K	SNW-13	SR-13-0	LER29	60
22213K	SNW-13	SR-13-0	LER29	65
22213K	SNW-13	SR-13-0	LER29	70
22215K	SNW-15	SR-15-0	LER37	65
22215K	SNW-15	SR-15-0	LER37	70
22215K	SNW-15	SR-15-0	LER37	75
22215K	SNW-15	SR-15-0	LER37	80
22215K	SNW-15	SR-15-0	LER37	85
22217K	SNW-17	SR-17-14	LER53	95
22217K	SNW-17	SR-17-14	LER53	100
22217K	SNW-17	SR-17-14	LER53	105
22217K	SNW-17	SR-17-14	LER53	110
22217K	SNW-17	SR-17-14	LER53	115
22220K	SNW-20	SR-20-17	LER102	140
22220K	SNW-20	SR-20-17	LER102	145
22220K	SNW-20	SR-20-17	LER102	150
22220K	SNW-20	SR-20-17	LER102	155
22222K	SNW-22	SR-22-19	LER109	200
22222K	SNW-22	SR-22-19	LER109	210
22222K	SNW-22	SR-22-19	LER109	220
22222K	SNW-22	SR-22-19	LER109	230
22222K	SNW-22	SR-22-19	LER109	240
22226K	SNW-26	SR-26-0	LER117	360
22226K	SNW-26	SR-26-0	LER117	380
22226K	SNW-26	SR-26-0	LER117	400
22226K	SNW-26	SR-26-0	LER117	420
22228K	SNW-28	SR-28-0	LER122	460
22228K	SNW-28	SR-28-0	LER122	480
22228K	SNW-28	SR-28-0	LER122	510
22228K	SNW-28	SR-28-0	LER122	530

INCH DUSTAC™ SHAFT SEAL

- Suggested for pillow blocks used in extremely contaminated environments, such as taconite mines.
- Provides protection against residual and airborne contaminants that are better than the triple-labyrinth shaft seal.
- Contributes significantly to extending service bearing life; reduces costs by helping prevent premature bearing damage.
- Because of its unique design, no special finish is required on the shaft. DUSTAC utilizes a V-shaped nitrile ring that rotates with the shaft and applies pressure to the cartridge face to help exclude contaminates.

TABLE 33.

Pillow Block Housing Number 500	600	Diameter S-1	Assembly Standout B	DUSTAC Seal Assembly	V-Ring Seal	O-Ring	End Plug
515	615	2 7/16	59/64	DV-37	V-60-A	2-228	EPS-4
516	616	2 11/16	59/64	DV-44	V-65-A	2-231	EPS-5
517	–	2 15/16	1	DV-53	V-75-A	2-230	EPS-6
518	–	3 3/16	1	DV-69	V-80-A	2-235	EPS-9
520	620	3 7/16	1	DV-102	V-85-A	2-234	EPS-11
522	622	3 15/16	1	DV-109	V-100-A	2-239	EPS-13
524	624	4 3/16	1 1/16	DV-113	V-110-A	2-238	EPS-14
526	626	4 7/16	1 1/16	DV-117	V-110-A	2-242	EPS-15
528	628	4 15/16	1 1/16	DV-122	V-130-A	2-244	EPS-16
530	630	5 3/16	1 1/16	DV-125	V-130-A	2-247	EPS-17
532	632	5 7/16	1 1/16	DV-130	V-140-A	2-249	EPS-18
534	634	5 15/16	1 1/16	DV-140	V-150-A	2-253	EPS-20
536	636	6 7/16	1 9/64	DV-148	V-160-A	2-259	EPS-21
538	638	6 15/16	1 9/64	DV-155	V-180-A	2-259	EPS-22
540	640	7 3/16	1 9/64	DV-159	V-180-A	2-259	EPS-23
544	–	7 15/16	1 15/32	DV-167	V-200-A	2-262	EPS-25

ORDER INSTRUCTIONS

- Shaft seal may be ordered in place of the standard LER triple-ring seals supplied with the pillow blocks listed. They also are available to retrofit existing installations.
- To order any pillow block housings with DUSTAC shaft seal on both sides, add the suffix "DV" to the number (e.g., SAF2522DV).
- To order pillow block housings with DUSTAC shaft seal and one end closed, add the suffix "DC" to the number (e.g., SAF22522DC).
- Standard sizes of DUSTAC shaft seals are shown in the table. Other sizes are available upon request.

INSTALLATION PROCEDURE

1. Check shaft diameters to print specification. Remove any burrs or sharp edges. Be sure that the shaft surface is clean and dry beyond the area of seal location.
2. Expand the V-ring seal over the shaft to the approximate inboard position (reference dimension "B" in the tables). *Make sure the lip of the seal faces the bearing.*
3. Slide the seal cartridge onto the shaft until the V-ring fits into its cavity.
4. Mount the bearing, sleeve, lockwasher and locknut in a normal manner and adjust for internal clearance.
5. If both ends have seals, repeat steps 2 and 3 with the V-ring going on last with its lip facing the bearing.
6. Thoroughly clean the housing base and remove any paint or burrs from the mating surfaces of the housing cap.
7. Lower shaft, bearing and seals into the housing base, taking care to guide the seals into the seal grooves.
8. On each shaft, there must be only one fixed bearing. If the bearing is to be fixed, the stabilizing ring can be inserted between the bearing outer ring and the housing shoulder on the locknut side of the bearing. All other bearings on this shaft should be centered in the housing.
9. The upper half of the housing or cap should be thoroughly cleaned and checked for burrs. Place it over the bearing and seals. The dowel pins will align the cap to the base. NOTE: Housing caps and bases are not interchangeable.
10. After the cap bolts are tightened, it is most important to position the V-ring seal to its proper fitted width. This is accomplished by moving the seal until it is flush with the outside face of the cavity. This provides proper compression of the lip against the cartridge face.

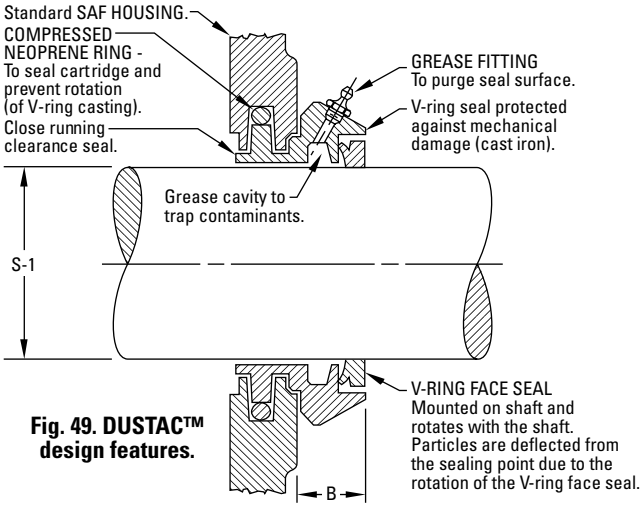

Fig. 49. DUSTAC™ design features.

SPHERICAL ROLLER BEARING METRIC AND INCH ACCESSORIES

Spherical roller bearing accessories are manufactured to the same quality standards as our bearings, ensuring a secure fit to straight and stepped shafts.

- **Sizes**: Accessories are available for metric and inch shaft sizes from 20 mm (0.78 inch) to 1000 mm (40 inch).
- **Features**: Extensive product range, including hydraulic assist, for integration into a full range of industrial applications.
- **Benefits**: Supports full range of installation and removal needs, minimizing the chance for damage to the bearing.

Nomenclature 166
Accessories Prefixes and Suffixes 167
Inch Sine Bar Gages 168

METRIC ACCESSORIES
Metric Accessories Index 169
Metric H Adapter Sleeves 175
Metric HE Adapter Sleeves for Inch Shaft 179
Metric HA Adapter Sleeves for Inch Shaft 181
Metric OH Hydraulic Adapter Sleeves 183
Metric AH Withdrawal Sleeves 187
Metric AOH Hydraulic Withdrawal Sleeves 192
Metric HMV Hydraulic Nuts 197
Metric Locknuts 201
Metric Lockwashers 207
Metric Lockplates 209

INCH ACCESSORIES
Inch Accessories – Pull-Type Sleeves 211
Inch Accessories – Push-Type Sleeves 220
Inch Accessories – Locknuts and Lockwashers 224
Inch Accessories – Locknuts and Lockplates 228
Inch HMVC Hydraulic Nuts 232

NOMENCLATURE

Timken provides accessories for your every need. To complement our line of Timken® spherical roller bearings, we offer bearing sleeves and locking devices in a wide range of sizes. These accessories are manufactured to the same quality standards as our bearings, ensuring a secure fit to straight and stepped shafts. Available in sizes up to 1000 mm (39.3701 inch), bearing sleeves are available in two distinct designs: assembled adapter sleeves and adapter sleeve assemblies.

ADAPTER SLEEVES

Timken adapter sleeves are used in conjunction with a nut and locking device to mount a tapered bore bearing onto a straight shaft using a pull-type fit. Smaller size assemblies (20 mm [0.78 inch] - 200 mm [12 inch] shaft) commonly use simple nuts, whereas larger assemblies (sizes >200 mm [12 inch]) may use HMV hydraulic nuts to assist in mounting. Tables 32, 33 and 34 outline our part number nomenclature, which is consistent with world standards for adapter sleeves.

TABLE 34. METRIC ADAPTER SLEEVES (H, OH) FOR METRIC SHAFT SIZES ARE SUPPLIED WITH CORRESPONDING LOCKNUT AND LOCKING DEVICE

Sleeve	Locknut	Locking Device
H standard metric/ OH hydraulic assist	KM, KML, HM	MB, MBL, MS

TABLE 35. METRIC ADAPTER SLEEVES (HA, HE) FOR INCH SHAFT SIZES ARE SUPPLIED WITH CORRESPONDING LOCKNUT AND LOCKING DEVICE

Sleeve	Locknut	Locking Device
HE standard inch (English Standard) HA standard inch (American standard)	KM, KML	MB, MBL

TABLE 36. INCH ADAPTER SLEEVES (SNW, SNP) FOR INCH SHAFT SIZES ARE SUPPLIED WITH CORRESPONDING LOCKNUT AND LOCKING DEVICE

Assembly	Sleeve	Locknut	Locking Device
SNW	S	N, AN	W
SNP	S	N	P

SNW assembly consists of a sleeve, locknut and lockwasher.
SNP assembly consists of a sleeve, locknut and lockplate.

WITHDRAWAL SLEEVES

Withdrawal sleeves feature a push-type mounting arrangement and a locking device (i.e., locknut or lockplate) to secure a bearing to a shaft. This design is not as widely used as the adapter sleeve assembly, and it does require the use of a specially designed dismounting nut. Timken's part number nomenclature for withdrawal sleeves also conforms to industry-accepted standards. Nuts are not supplied with the withdrawal sleeve and must be ordered separately. The dismounting of large assemblies can be eased by using a hydraulic nut (HMV).

TABLE 37. METRIC WITHDRAWAL SLEEVE FOR METRIC SHAFT SIZES

Sleeve	Dismounting Nut	Hydraulic Nut
AH standard metric/AOH hydraulic assist	KM, HM	HMV

TABLE 38. INCH WITHDRAWAL SLEEVE FOR INCH SHAFT SIZES

Sleeve	Locknut	Lockwasher/Plate	Dismounting Nut
SK	N, AN	W, P	AN, ARN, RN, N

LOCKING DEVICE

Timken offers a wide range of locknuts to locate bearing assemblies on application shafts. Sometimes referred to as shaft or withdrawal nuts, they are used to secure the assembly onto, and sometimes aid with the removal from the shaft.

LOCKWASHERS (MB, MBL AND W)

Locking washers are designed to secure the relative movement of a properly positioned locknut, so that a bearing and adapter sleeve remain tightly fitted to a shaft or a bearing remains secure against a shaft shoulder. The tab in the bore of the washer engages a keyway in the shaft or slot in the adapter sleeve. There are tabs on the O.D. of the washer that can be bent over into slots on the circumference of the locknut. Locking washers are used with locknuts in the KM and KML series as well as for the locknuts with inch dimensions in the N and AN series.

LOCKPLATES (MS AND P)

Lockplates are bolted onto the outboard face of the locknut and fit into a keyway machined in the shaft or a slot in the adapter sleeve.

- MS series are mounted on metric shafts sizes with HM locknuts.
- P series are mounted on metric shafts sizes with N locknuts.

To learn more about our spherical roller bearing accessories, contact your Timken sales engineer. Standard suffixes and prefixes are found on page 167.

ACCESSORIES PREFIXES AND SUFFIXES

Prefix	Suffix	Part Description	Full Description
AH		Withdrawal sleeve	Withdrawal sleeve
AHX		Withdrawal sleeve	Withdrawal sleeve – modified
AOH		Withdrawal sleeve – hydraulic	Withdrawal sleeve with oil hole on nut end
AOHX		Withdrawal sleeve – hydraulic	Withdrawal sleeve – modified with oil hole on nut end
H		Adapter sleeve – metric	Adapter sleeve
OH		Adapter sleeve – hydraulic	Adapter sleeve with oil hole on large end (opposite to the threaded end)
HA		Adapter sleeve metric – inch shaft	Metric adapter sleeves for shafts with inch dimensions (American standards)
HE		Adapter sleeve metric – inch shaft	Metric adapter sleeves for shafts with inch dimensions (English standards)
SNW		Adapter sleeve – inch	Adapter sleeves, locknut and lockwasher with inch dimensions
SNP		Adapter sleeve – inch	Adapter sleeves, locknut and lockplate with inch dimensions
KM		Locknut	Locknut
KML		Locknut	Locknut – light; smaller outside diameter
HM		Locknut	Locknut/removal nut
HML		Locknut	Locknut/removal nut – light
HME		Locknut	Locknut/removal nut – with locking screw
HM….T		Locknut	Locknut/removal nut
HML….T		Locknut	Locknut/removal nut – light
HMLL… .T		Locknut	Locknut/removal nut – super light
MB		Lockwasher	Lockwasher
MBL		Lockwasher	Lockwasher – light
MS		Lock clip	Locking clip
	G	Sleeve	Thread pitch diameter changed to ISO standard
	H	Locknut	Additional threaded holes on locknut for locking screws (no screws)
	HS	Locknut	Additional threaded holes on locknut for locking screws and screws
OH..	H	Adapter sleeve – hydraulic	Adapter sleeve with oil hole on nut end – standard design
OH..	HB	Adapter sleeve – hydraulic	Adapter sleeve with grooves and oil hole or two holes for bigger sizes on nut end
OH..	B	Adapter sleeve – hydraulic	Adapter sleeve with grooves and oil hole or two holes for bigger sizes on large end (opposite to the threaded end)
OH..	S	Adapter sleeve – hydraulic	Adapter sleeve with oil hole on large end (opposite to the threaded end) plus nut with eight threaded holes
OH..	BS	Adapter sleeve – hydraulic	Adapter sleeve with grooves and oil hole or two holes for bigger sizes on large end (opposite to the threaded end) plus nut with eight threaded holes

INCH SINE BAR GAGES

- Tapered-bore, antifriction bearings are mounted either on adapter sleeves or on tapered shaft seats.
- In cases where tapered bore bearings are mounted directly on the shaft, the shaft must conform to the tapered bore of the bearing to ensure a proper fit. If a proper fit is not achieved, the results could be:
  - Turning of the bearing inner race on the shaft.
  - Uneven loading of the bearing.
  - Severe inner race hoop stress.
  - Insufficient support (back-up) of the inner race on the shaft.
- All of these conditions could lead to premature bearing wear. Therefore, the manufacture, maintenance and measurement of accurate shaft tapers is important.
- There are two accepted ways of measuring tapered shafts: ring gages and sine bar gages.
- Precision measurement of tapered shafts is difficult with ring gages and may be impossible in the case of large shafts where gages are large, cumbersome and heavy.
- Sine bar gages provide an accurate and easy method of measurement.
- Lightweight, and easy to handle and use, sine bar gages achieve precise gaging of the shaft size and taper.
- A complete set for measurement of 1:12 shaft tapers consists of 3 inch, 4 inch, 5½ inch, 7 inch, 10 inch and 14 inch sine bar gages, sine bar saddle no. T-5491-C, web clamp no. T-5489-A and a wooden box no. T-5224-C. A complete set for 1:30 shaft tapers consists of 4 inch, 6 inch, 8 inch and 12 inch sine bar gages.
- Sine bars can be purchased individually or in any combination of sizes to meet your individual needs.
- All sine bars require a sine bar saddle and web clamp. A wooden box is optional.
- For information on the use of sine bars, prices and delivery, consult your Timken sales engineer.

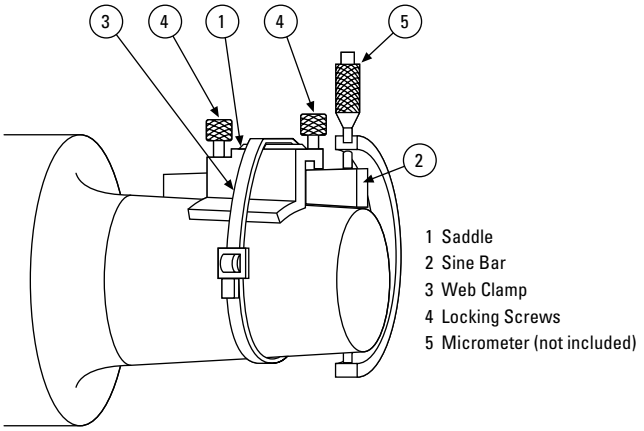

Fig. 50. Parts of a sine gage.

TABLE 39.

Part Number	Size	For Bearings
	in.	
T-3071-C	3.0000	22232K to 22240K
	3.0000	22322K to 22328K
	3.0000	23040K to 23048K
	3.0000	23130K to 23136K
	3.0000	23226K to 23230K
		23960K to 23972K
T-3072-C	4.0000	22248K to 22256K
	4.0000	22330K to 22340K
	4.0000	23052K to 23076K
	4.0000	23138K to 23148K
	4.0000	23232K to 23240K
		23976K to 239/560K
T-3073-C	5.5000	22260K to 22264K
	5.5000	23080K to 230/500K
	5.5000	23152K to 23164K
	5.5000	23244K to 23256K
		239/600K to 239/710K

Note: All sine bars require a sine bar saddle, T-5491-C, and a web clamp, T-5489-A.

TABLE 40.

Part Number	Size	For Bearings
	in.	
T-3074-C	7.0000	230/530K to 230/750K
	7.0000	23168K to 23196K
	7.0000	23260K to 23276K
		239/750K to 239/1120K
T-3075-C	10.0000	230/800K to 230/1180
	10.0000	231/500K to 231/710K
	10.0000	23280K to 232/530K
		230/1250 and up
T-3076-C	14.0000	231/750K and up
	14.0000	232/560K and up
		239/118K and up
T-5476-C	4.0000	24040K to 24056K
	4.0000	24132K to 24144K
T-5477-C	6.0000	24060K to 24084K
	6.0000	24148K to 24160K
T-5478-C	8.0000	24089K to 240/630K
	8.0000	24164K to 24192K
T-5479-C	12.0000	240/670K and up
	12.0000	24196K and up

The table above represents the sine bar sizes developed for a full range of tapered bore bearings with a 1:12 and a 1:30 taper. Additional sizes are available to fit a variety of width-and-taper combinations. Consult your local Timken sales engineer for availability.

METRIC ACCESSORIES INDEX

Bearing Bore	Bearing Part Number	Adapter Sleeve		Withdrawal Sleeve	
mm		Metric Shaft	Hydraulic Metric Shaft	Metric Shaft	Hydraulic Metric Shaft
25	22205K	H305			
30	22206K	H306			
35	22207K	H307			
40	21308K	H308		AH308	
40	22208K	H308		AH308	
40	22308K	H2308		AH2308	
45	21309K	H309		AH309	
45	22209K	H309		AH309	
45	22309K	H2309		AH2309	
50	21310K	H310		AHX310	
50	22210K	H310		AHX310	
50	22310K	H2310		AHX2310	
55	21311K	H311		AHX311	
55	22211K	H311		AHX311	
55	22311K	H2311		AHX2311	
60	21312K	H312		AHX312	
60	22212K	H312		AHX312	
60	22312K	H2312		AHX2312	
65	21313K	H313		AH313G	
65	22213K	H313		AH313G	
65	22313K	H2313		AH2313G	
70	21314K	H314		AH314G	
70	22214K	H314		AH314G	
70	22314K	H2314		AHX2314G	
75	21315K	H315		AH315G	
75	22215K	H315		AH315G	
75	22315K	H2315		AHX2315G	
80	21316K	H316		AH316	
80	22216K	H316		AH316	
80	22316K	H2316		AHX2316	
85	21317K	H317		AHX317	
85	22217K	H317		AHX317	
85	22317K	H2317		AHX2317	
90	21318K	H318		AHX318	
90	22218K	H318		AHX318	
90	22318K	H2318		AHX2318	
90	23218K	H2318		AHX3218	
95	22219K	H319		AHX319	
95	22319K	H2319		AHX2319	
100	22220K	H320		AHX320	
100	22320K	H2320		AHX2320	
100	23120K	H3120		AHX3120	
100	23220K	H2320		AHX3220	
105	23221K	H2321			
110	22222K	H322		AHX3122	
110	22322K	H2322		AHX2322G	
110	23022K	H322		AHX322	
110	23122K	H3122		AHX3122	
110	23222K	H2322		AHX3222G	
110	24122K			AH24122	

Continued on next page.

METRIC ACCESSORIES INDEX – *continued*

Bearing Bore	Bearing Part Number	Adapter Sleeve		Withdrawal Sleeve	
mm		Metric Shaft	Hydraulic Metric Shaft	Metric Shaft	Hydraulic Metric Shaft
120	22224K	H3124		AHX3124	
120	22324K	H2324		AHX2324G	
120	23024K	H3024		AHX3024	
120	23124K	H3124		AHX3124	
120	23224K	H2324		AHX3224G	
120	24024K			AH24024	
120	24124K			AH24124	
130	22226K	H3126		AHX3126	
130	22326K	H2326		AHX2326G	
130	23026K	H3026		AHX3026	
130	23126K	H3126		AHX3126	
130	23226K	H2326		AHX3226G	
130	23926K	H3926			
130	24026K			AH24026	
130	24126K			AH24126	
140	22228K	H3128		AHX3128	
140	22328K	H2328		AHX2328G	
140	23028K	H3028		AHX3028	
140	23128K	H3128		AHX3128	
140	23228K	H2328		AHX3228G	
140	23928K	H3928			
140	24028K			AH24028	
140	24128K			AH24128	
150	22230K	H3130		AHX3130G	
150	22330K	H2330		AHX2330G	
150	23030K	H3030		AHX3030	
150	23130K	H3130		AHX3130G	
150	23230K	H2330		AHX3230G	
150	23930K	H3930			
150	24030K			AH24030	
150	24130K			AH24130	
160	22232K	H3132	OH3132H	AH3132G	AOH3132G
160	22332K	H2332	OH2332H	AH2332G	AOH2332G
160	23032K	H3032	OH3032H	AH3032	
160	23132K	H3132	OH3132H	AH3132G	AOH3132G
160	23232K	H2332	OH2332H	AH3232G	AOH3232G
160	23932K	H3932	OH3932H		
160	24032K			AH24032	
160	24132K			AH24132	
170	22234K	H3134	OH3134H	AH3134G	AOH3134G
170	22334K	H2334	OH2334H	AH2334G	AOH2334G
170	23034K	H3034	OH3034H	AH3034	
170	23134K	H3134	OH3134H	AH3134G	AOH3134G
170	23234K	H2334	OH2334H	AH3234G	AOH3234G
170	23934K	H3934	OH3934H	AH3934	AOH3934
170	24034K			AH24034	
170	24134K			AH24134	
180	22236K	H3136	OH3136H	AH2236G	AOH2236G
180	22336K	H2336	OH2336H	AH2336G	AOH2336G
180	23036K	H3036	OH3036H	AH3036	AOH3036

Continued on next page.

Bearing Bore	Bearing Part Number	Adapter Sleeve		Withdrawal Sleeve	
mm		Metric Shaft	Hydraulic Metric Shaft	Metric Shaft	Hydraulic Metric Shaft
180	23136K	H3136	OH3136H	AH3136G	AOH3136G
180	23236K	H2336	OH2336H	AH3236G	AOH3236G
180	23936K	H3936	OH3936H	AH3936	AOH3936
180	24036K			AH24036	
180	24136K			AH24136	
190	22238K	H3138	OH3138H	AH2238G	AOH2238G
190	22338K	H2338	OH2338H	AH2338G	AOH2338G
190	23038K	H3038	OH3038H	AH3038G	AOH3038G
190	23138K	H3138	OH3138H	AH3138G	AOH3138G
190	23238K	H2338	OH2338H	AH3238G	AOH3238G
190	23938K	H3938	OH3938H	AH3938	AOH3938
190	24038K			AH24038	
190	24138K			AH24138	
200	22240K	H3140	OH3140H	AH2240	AOH2240
200	22340K	H2340	OH2340H	AH2340	AOH2340
200	23040K	H3040	OH3040H	AH3040G	AOH3040G
200	23140K	H3140	OH3140H	AH3140	AOH3140
200	23240K	H2340	OH2340H	AH3240	AOH3240
200	23940K	H3940	OH3940H	AH3940	AOH3940
200	24040K			AH24040	
200	24140K			AH24140	
220	22244K	H3144	OH3144H	AH2244	AOH2244
220	22344K	H2344	OH2344H	AH2344	AOH2344
220	23044K	H3044	OH3044H	AH3044G	AOH3044G
220	23144K	H3144	OH3144H	AH3144	AOH3144
220	23244K	H2344	OH2344H	AH2344	AOH2344
220	23944K	H3944	OH3944H	AH3944	AOH3944
220	24044K			AH24044	AOH24044
220	24144K			AH24144	AOH24144
240	22248K	H3148	OH3148H	AH2248	AOH2248
240	22348K	H2348	OH2348H	AH2348	AOH2348
240	23048K	H3048	OH3048H	AH3048	AOH3048
240	23148K	H3148	OH3148H	AH3148	AOH3148
240	23248K	H2348	OH2348H	AH2348	AOH2348
240	23948K	H3948	OH3948H	AH3948	AOH3948
240	24048K			AH24048	AOH24048
240	24148K			AH24148	AOH24148
260	22252K	H3152	OH3152H	AH2252G	AOH2252G
260	22352K	H2352	OH2352H	AH2352G	AOH2352G
260	23052K	H3052	OH3052H	AH3052	AOH3052
260	23152K	H3152	OH3152H	AH3152G	AOH3152G
260	23252K	H2352	OH2352H	AH2352G	AOH2352G
260	23952K	H3952	OH3952H	AH3952	AOH3952
260	24052K				AOH24052G
260	24152K			AH24152	AOH24152
280	22256K	H3156	OH3156H	AH2256G	AOH2256G
280	22356K	H2356	OH2356H	AH2356G	AOH2356G
280	23056K	H3056	OH3056H	AH3056	AOH3056
280	23156K	H3156	OH3156H	AH3156G	AOH3156G
280	23256K	H2356	OH2356H	AH2356G	AOH2356G
280	23956K	H3956	OH3956H	AH3956	AOH3956

Continued on next page.

METRIC ACCESSORIES INDEX – *continued*

Bearing Bore	Bearing Part Number	Adapter Sleeve		Withdrawal Sleeve	
mm		Metric Shaft	Hydraulic Metric Shaft	Metric Shaft	Hydraulic Metric Shaft
280	24056K				AOH24056G
280	24156K			AH24156	AOH24156
300	22260K	H3160	OH3160H	AH2260G	AOH2260G
300	23060K	H3060	OH3060H	AH3060	AOH3060
300	23160K	H3160	OH3160H	AH3160G	AOH3160G
300	23260K	H3260	OH3260H	AH3260G	AOH3260G
300	23960K	H3960	OH3960H	AH3960	AOH3960
300	24060K				AOH24060G
300	24160K			AH24160	AOH24160
320	22264K	H3164	OH3164H	AH2264G	AOH2264G
320	23064K	H3064	OH3064H	AH3064G	AOH3064G
320	23164K	H3164	OH3164H	AH3164G	AOH3164G
320	23264K	H3264	OH3264H	AH3264G	AOH3264G
320	23964K	H3964	OH3964H	AH3964	AOH3964
320	24064K				AOH24064G
320	24164K			AH24164	AOH24164
340	23068K	H3068	OH3068H	AH3068G	AOH3068G
340	23168K	H3168	OH3168H	AH3168G	AOH3168G
340	23268K	H3268	OH3268H	AH3268G	AOH3268G
340	23968K	H3968	OH3968H	AH3968	AOH3968
340	24068K			AH24068	AOH24068
340	24168K			AH24168	AOH24168
360	23072K	H3072	OH3072H	AH3072G	AOH3072G
360	23172K	H3172	OH3172H	AH3172G	AOH3172G
360	23272K	H3272	OH3272H	AH3272G	AOH3272G
360	23972K	H3972	OH3972H	AH3972	AOH3972
360	24072K			AH24072	AOH24072
360	24172K			AH24172	AOH24172
380	23076K	H3076	OH3076H	AH3076G	AOH3076G
380	23176K	H3176	OH3176H	AH3176G	AOH3176G
380	23276K	H3276	OH3276H	AH3276G	AOH3276G
380	23976K	H3976	OH3976H	AH3976	AOH3976
380	24076K			AH24076	AOH24076
380	24176K			AH24176	AOH24176
400	22380K	H3280	OH3280H	AH3280G	AOH3280G
400	23080K	H3080	OH3080H	AH3080G	AOH3080G
400	23180K	H3180	OH3180H	AH3180G	AOH3180G
400	23280K	H3280	OH3280H	AH3280G	AOH3280G
400	23980K	H3980	OH3980H	AH3980	AOH3980
400	24080K			AH24080	AOH24080
400	24180K			AH24180	AOH24180
420	23084K	H3084	OH3084H	AH3084G	AOH3084G
420	23184K	H3184	OH3184H	AH3184G	AOH3184G
420	23284K	H3284	OH3284H	AH3284G	AOH3284G
420	23984K	H3984	OH3984H	AH3984	AOH3984
420	24084K			AH24084	AOH24084
420	24184K			AH24184	AOH24184
440	23088K	H3088	OH3088H	AHX3088G	AOHX3088G
440	23188K	H3188	OH3188H	AHX3188G	AOHX3188G
440	23288K	H3288	OH3288H	AHX3288G	AOHX3288G
440	23988K	H3988	OH3988H	AH3988	AOH3988

Continued on next page.

Bearing Bore	Bearing Part Number	Adapter Sleeve		Withdrawal Sleeve	
mm		Metric Shaft	Hydraulic Metric Shaft	Metric Shaft	Hydraulic Metric Shaft
440	24088K			AH24088	AOH24088
440	24188K			AH24188	AOH24188
460	23092K		OH3092H	AHX3092G	AOHX3092G
460	23192K	H3192	OH3192H	AHX3192G	AOHX3192G
460	23292K	H3292	OH3292H	AHX3292G	AOHX3292G
460	23992K	H3992	OH3992H	AH3992	AOH3992
460	24092K			AH24092	AOH24092
460	24192K			AH24192	AOH24192
480	23096K		OH3096H		AOHX3096G
480	23196K		OH3196H		AOHX3196G
480	23296K	H3296	OH3296H	AHX3296G	AOHX3296G
480	23996K	H3996	OH3996H	AH3996	AOH3996
480	24096K			AH24096	AOH24096
480	24196K			AH24196	AOH24196
500	230/500K		OH30/500H		AOHX30/500G
500	231/500K		OH31/500H		AOHX31/500G
500	232/500K		OH32/500H		AOHX32/500G
500	239/500K		OH39/500H		AOH39/500
500	240/500K				AOH240/500
500	241/500K				AOH241/500
530	230/530K		OH30/530H		AOH30/530
530	231/530K		OH31/530H		AOH31/530
530	232/530K		OH32/530H		AOH32/530G
530	239/530K		OH39/530H		AOH39/530
530	240/530K				AOH240/530G
530	241/530K				AOH241/530G
560	230/560K		OH30/560H		AOH30/560
560	231/560K		OH31/560H		AOH31/560
560	232/560K		OH32/560H		AOH32/560
560	239/560K		OH39/560H		AOH39/560
560	240/560K				AOH240/560G
560	241/560K				AOH241/560G
600	230/600K		OH30/600H		AOH30/600
600	231/600K		OH31/600H		AOH31/600
600	232/600K		OH32/600H		AOH32/600G
600	239/600K		OH39/600H		AOH39/600
600	240/600K				AOH240/600
600	241/600K				AOH241/600
630	230/630K		OH30/630H		AOH30/630
630	231/630K		OH31/630H		AOH31/630
630	232/630K		OH32/630H		AOH32/630G
630	239/630K		OH39/630H		AOH39/630
630	240/630K				AOH240/630G
630	241/630K				AOH241/630G
670	230/670K		OH30/670H		AOH30/670
670	231/670K		OH31/670H		AOH31/670
670	232/670K		OH32/670H		AOH32/670G
670	239/670K		OH39/670H		AOH39/670
670	240/670K				AOH240/670G
670	241/670K				AOH241/670

Continued on next page.

METRIC ACCESSORIES INDEX – *continued*

Bearing Bore	Bearing Part Number	Adapter Sleeve		Withdrawal Sleeve	
mm		Metric Shaft	Hydraulic Metric Shaft	Metric Shaft	Hydraulic Metric Shaft
710	230/710K		OH30/710H		AOH30/710
710	231/710K		OH31/710H		AOH31/710
710	232/710K		OH32/710H		AOH32/710G
710	239/710K		OH39/710H		AOH39/710
710	240/710K				AOH240/710G
710	241/710K				AOH241/710
750	230/750K		OH30/750H		AOH30/750
750	239/750K		OH39/750H		AOH39/750
750	240/750K				AOH240/750G
750	241/750K				AOH241/750G
800	230/800K		OH30/800H		AOH30/800
800	231/800K		OH31/800H		AOH31/800
800	232/800K		OH32/800H		AOH32/800G
800	239/800K		OH39/800H		AOH39/800
800	240/800K				AOH240/800G
800	241/800K				AOH241/800G
850	230/850K		OH30/850H		AOH30/850
850	231/850K		OH31/850H		AOH31/850
850	232/850K		OH32/850H		AOH32/850
850	239/850K		OH39/850H		AOH39/850
850	240/850K				AOH240/850G
900	230/900K		OH30/900H		AOH30/900
900	231/900K		OH31/900H		AOH31/900
900	232/900K		OH32/900H		AOH32/900
900	239/900K		OH39/900H		AOH39/900
900	240/900K				AOH240/900
900	241/900K				AOH241/900
950	230/950K		OH30/950H		AOH30/950
950	231/950K		OH31/950H		AOH31/950
950	232/950K		OH32/950H		AOH32/950
950	239/950K		OH39/950H		AOH39/950
950	240/950K				AOH240/950
950	241/950K				AOH241/950
1000	230/1000K		OH30/1000H		AOH30/1000
1000	231/1000K		OH31/1000H		AOH31/1000
1000	232/1000K		OH32/1000H		AOH32/1000
1000	239/1000K		OH39/1000H		AOH39/1000
1000	240/1000K				AOH240/1000
1000	241/1000K				AOH241/1000
1060	230/1060K		OH30/1060H		AOH30/1060
1060	231/1060K		OH31/1060H		AOH31/1060
1060	239/1060K		OH39/1060H		AOH39/1060
1060	240/1060K				AOH240/1060
1120	239/1120K		OH39/1120H		

METRIC H ADAPTER SLEEVES

- Effective tapered bore bearing assembly.
- Includes mounting sleeve, locknut and lockwasher or lockplate.
- Other dimensions may be available, consult your Timken sales engineer.

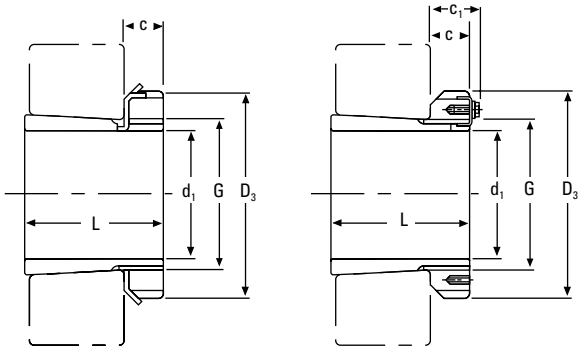

$d_1 \leq 180$ mm $d_1 \geq 200$ mm

d_1	Sleeve Part Number[1]	L	C	Thread[2] G	D_3	C_1[3]	Weight	Locknuts	Lockwasher and Lockplates	Appropriate Hydraulic Nut
mm		mm	mm	mm	mm	mm	kg			
20	H305	29	8	M 25x1.5	38	–	0.17	KM5	MB5	–
25	H306	31	8	M 30x1.5	45	–	0.24	KM6	MB6	–
30	H307	35	9	M 35x1.5	52	–	0.31	KM7	MB7	–
35	H308	36	10	M 40x1.5	58	–	0.42	KM8	MB8	–
35	H2308	46	10	M 40x1.5	58	–	0.22	KM8	MB8	–
40	H309	39	11	M 45x1.5	65	–	0.55	KM9	MB9	–
40	H2309	50	11	M 45x1.5	65	–	0.28	KM9	MB9	–
45	H310	42	12	M 50x1.5	70	–	0.67	KM10	MB10	HMV10
45	H2310	55	12	M 50x1.5	70	–	0.36	KM10	MB10	HMV10
50	H311	45	12	M 55x2	75	–	0.76	KM11	MB11	HMV11
50	H2311	59	12	M 55x2	75	–	0.42	KM11	MB11	HMV11
55	H312	47	13	M 60x2	80	–	0.87	KM12	MB12	HMV12
55	H2312	62	13	M 60x2	80	–	0.48	KM12	MB12	HMV12
60	H313	50	14	M 65x2	85	–	1.01	KM13	MB13	HMV13
60	H314	52	14	M 70x2	92	–	1.59	KM14	MB14	HMV14
60	H2313	65	14	M 65x2	85	–	0.56	KM13	MB13	HMV13
60	H2314	68	14	M 70x2	92	–	0.90	KM14	MB14	HMV14
65	H315	55	15	M 75x2	98	–	1.83	KM15	MB15	HMV15
65	H2315	73	15	M 75x2	98	–	1.05	KM15	MB15	HMV15
70	H316	59	17	M 80x2	105	–	2.27	KM16	MB16	HMV16
70	H2316	78	17	M 80x2	105	–	1.28	KM16	MB16	HMV16
75	H317	63	18	M 85x2	110	–	2.60	KM17	MB17	HMV17
75	H2317	82	18	M 85x2	110	–	1.45	KM17	MB17	HMV17
80	H318	65	18	M 90x2	120	–	3.02	KM18	MB18	HMV18
80	H2318	86	18	M 90x2	120	–	1.69	KM18	MB18	HMV18
85	H319	68	19	M 95x2	125	–	3.44	KM19	MB19	HMV19
85	H2319	90	19	M 95x2	125	–	1.92	KM19	MB19	HMV19
90	H320	71	20	M 100x2	130	–	3.73	KM20	MB20	HMV20
90	H3120	76	20	M 100x2	130	–	1.80	KM20	MB20	HMV20
90	H2320	97	20	M 100x2	130	–	2.15	KM20	MB20	HMV20

[1]Adapter sleeves are supplied complete with locknuts and lockwasher or lockplates.
[2]M means metric thread and the digits are major diameter of thread and pitch.
[3]Adapters with a C_1 dimension use a lockplate as the locking device as shown in the illustration; otherwise, a lockwasher is used as the locking device.
NOTE: Sleeves are not sold separately.

Continued on next page.

METRIC H ADAPTER SLEEVES – *continued*

- Effective tapered bore bearing assembly.
- Includes mounting sleeve, locknut and lockwasher or lockplate.
- Other dimensions may be available, consult your Timken sales engineer.

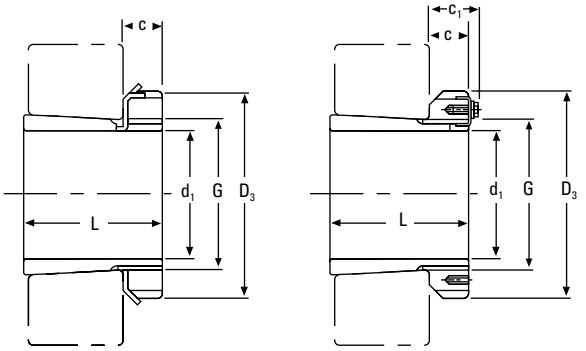

$d_1 \leq 180$ mm $d_1 \geq 200$ mm

Continued from previous page.

d_1	Sleeve Part Number[1]	L	C	Thread[2] G	D_3	C_1[3]	Weight	Locknuts	Lockwasher and Lockplates	Appropriate Hydraulic Nut
mm		**mm**	**mm**	**mm**	**mm**	**mm**	**kg**			
95	H321	**74**	**20**	**M 105x2**	**140**	–	**4.30**	KM 21	MB21	HMV21
95	H2321	**101**	**20**	**M 105x2**	**140**	–	**2.46**	KM21	MB21	HMV21
100	H322	**77**	**21**	**M 110x2**	**145**	–	**4.81**	KM22	MB22	HMV22
100	H3122	**81**	**21**	**M 110x2**	**145**	–	**2.25**	KM22	MB22	HMV22
100	H2322	**105**	**21**	**M 110x2**	**145**	–	**2.74**	KM22	MB22	HMV22
110	H3024	**72**	**22**	**M 120x2**	**145**	–	**1.93**	KML24	MBL24	HMV24
110	H3124	**88**	**22**	**M 120x2**	**155**	–	**2.64**	KM24	MB24	HMV24
110	H2324	**112**	**22**	**M 120x2**	**155**	–	**3.19**	KM24	MB24	HMV24
115	H3926	**65**	**23**	**M 130x2**	**155**	–	**2.40**	KML26	MBL26	HMV26
115	H3026	**80**	**23**	**M 130x2**	**155**	–	**2.85**	KML26	MBL26	HMV26
115	H3126	**92**	**23**	**M 130x2**	**165**	–	**3.66**	KM26	MB26	HMV26
115	H2326	**121**	**23**	**M 130x2**	**165**	–	**4.60**	KM26	MB26	HMV26
125	H3928	**66**	**24**	**M 140x2**	**165**	–	**2.70**	KML28	MBL28	HMV28
125	H3028	**82**	**24**	**M 140x2**	**165**	–	**3.16**	KML28	MBL28	HMV28
125	H3128	**97**	**24**	**M 140x2**	**180**	–	**4.34**	KM28	MB28	HMV28
125	H2328	**131**	**24**	**M 140x2**	**180**	–	**5.55**	KM28	MB28	HMV28
135	H3930	**76**	**26**	**M 150x2**	**180**	–	**3.60**	KML30	MBL30	HMV30
135	H3030	**87**	**26**	**M 150x2**	**180**	–	**3.89**	KML30	MBL30	HMV30
135	H3130	**111**	**26**	**M 150x2**	**195**	–	**5.52**	KM30	MB30	HMV30
135	H2330	**139**	**26**	**M 150x2**	**195**	–	**6.63**	KM30	MB30	HMV30
140	H3932	**78**	**27.5**	**M 160x3**	**190**	–	**4.60**	KML32	MBL32	HMV32
140	H3032	**93**	**27.5**	**M 160x3**	**190**	–	**5.21**	KML32	MBL32	HMV32
140	H3132	**119**	**28**	**M 160x3**	**210**	–	**7.67**	KM32	MB32	HMV32
140	H2332	**147**	**28**	**M 160x3**	**210**	–	**9.14**	KM32	MB32	HMV32
150	H3934	**79**	**27.5**	**M 170x3**	**200**	–	**5.00**	KML34	MBL34	HMV34
150	H3034	**101**	**28.5**	**M 170x3**	**200**	–	**5.99**	KML34	MBL34	HMV34
150	H3134	**122**	**29**	**M 170x3**	**220**	–	**8.38**	KM34	MB34	HMV34
150	H2334	**154**	**29**	**M 170x3**	**220**	–	**10.20**	KM34	MB34	HMV34

[1]Adapter sleeves are supplied complete with locknuts and lockwasher or lockplates.
[2]M means metric thread and the digits are major diameter of thread and pitch.
[3]Adapters with a C_1 dimension use a lockplate as the locking device as shown in the illustration; otherwise, a lockwasher is used as the locking device.
NOTE: Sleeves are not sold separately.

Continued on next page.

Continued from previous page.

d_1	Sleeve Part Number[1]	L	C	Thread[2][3] G	D_3	C_1[4]	Weight	Locknuts	Lockwasher and Lockplates	Appropriate Hydraulic Nut
mm		mm	mm	mm	mm	mm	kg			
160	H3936	87	29.5	M 180x3	210	–	5.70	KML36	MBL36	HMV36
160	H3036	109	29.5	M 180x3	210	–	6.83	KML36	MBL36	HMV36
160	H3136	131	30	M 180x3	230	–	9.50	KM36	MB36	HMV36
160	H2336	161	30	M 180x3	230	–	11.30	KM36	MB36	HMV36
170	H3938	89	30.5	M 190x3	220	–	6.19	KML38	MBL38	HMV38
170	H3038	112	30.5	M 190x3	220	–	7.45	KML38	MBL38	HMV38
170	H3138	141	31	M 190x3	240	–	10.80	KM38	MB38	HMV38
170	H2338	169	31	M 190x3	240	–	12.60	KM38	MB38	HMV38
180	H3940	98	31.5	M 200x3	240	–	7.89	KML40	MBL40	HMV40
180	H3040	120	31.5	M 200x3	240	–	9.19	KML40	MBL40	HMV40
180	H3140	150	32	M 200x3	250	–	12.10	KM40	MB40	HMV40
180	H2340	176	32	M 200x3	250	–	13.90	KM40	MB40	HMV40
200	H3944	96	30	Tr 220x4	260	41	8.16	HM3044	MS3044	HMV44
200	H3044	126	30	Tr 220x4	260	41	10.30	HM3044	MS3044	HMV44
200	H3144	161	35	Tr 220x4	280	–	15.10	HM44T	MB44	HMV44
200	H2344	186	35	Tr 220x4	280	–	17.00	HM44T	MB44	HMV44
220	H3948	101	34	Tr 240x4	290	46	11.00	HM3048	MS3048	HMV48
220	H3048	133	34	Tr 240x4	290	46	13.20	HM3048	MS3048	HMV48
220	H3148	172	37	Tr 240x4	300	–	17.60	HM48T	MS48	HMV48
220	H2348	199	37	Tr 240x4	300	–	20.00	HM48T	MS48	HMV48
240	H3952	116	34	Tr 260x4	310	46	12.80	HM3052	MS3052	HMV52
240	H3052	145	34	Tr 260x4	310	46	15.30	HM3052	MS3052	HMV52
240	H3152	190	39	Tr 260x4	330	–	22.30	HM52T	MB52	HMV52
240	H2352	211	39	Tr 260x4	330	–	24.50	HM52T	MB52	HMV52
260	H3956	121	38	Tr 280x4	330	50	15.30	HM3056	MS3056	HMV56
260	H3056	152	38	Tr 280x4	330	50	17.70	HM3056	MS3056	HMV56
260	H3156	195	41	Tr 280x4	350	–	25.10	HM56T	MB56	HMV56
260	H2356	224	41	Tr 280x4	350	–	28.40	HM56T	MB56	HMV56
280	H3960	140	42	Tr 300x4	360	54	20.00	HM3060	MS3060	HMV60
280	H3060	168	42	Tr 300x4	360	54	22.80	HM3060	MS3060	HMV60
280	H3160	208	40	Tr 300x4	380	53	30.20	HM3160	MS3160	HMV60
280	H3260	240	40	Tr 300x4	380	53	34.10	HM3160	MS3160	HMV60
300	H3964	140	42	Tr 320x5	380	55	21.50	HM3064	MS3064	HMV64
300	H3064	171	42	Tr 320x5	380	55	24.60	HM3064	MS3064	HMV64
300	H3164	226	42	Tr 320x5	400	56	34.90	HM3164	MS3164	HMV64
300	H3264	258	42	Tr 320x5	400	56	39.30	HM3164	MS3164	HMV64

[1]Adapter sleeves are supplied complete with locknuts and lockwasher or lockplates.
[2]M means metric thread and the digits are major diameter of thread and pitch.
[3]Tr means 30°. Trapezoid thread and the digits are outside diameter of thread and pitch.
[4]Adapters with a C_1 dimension use a lockplate as the locking device as shown in the illustration; otherwise, a lockwasher is used as the locking device.
NOTE: Sleeves are not sold separately.

Continued on next page.

METRIC H ADAPTER SLEEVES – *continued*

- Effective tapered bore bearing assembly.
- Includes mounting sleeve, locknut and lockwasher or lockplate.
- Other dimensions may be available, consult your Timken sales engineer.

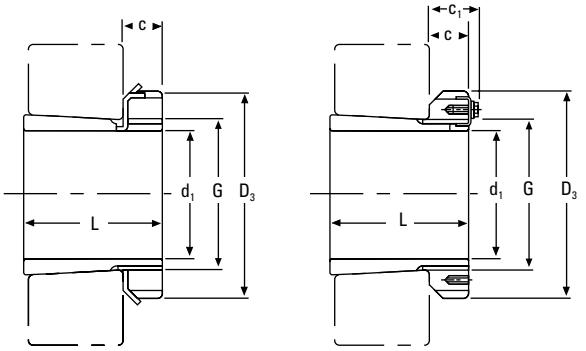

$d_1 \leq 180$ mm $d_1 \geq 200$ mm

Continued from previous page.

d_1	Sleeve Part Number[1]	L	C	Thread[2] G	D_3	C_1[3]	Weight	Locknuts	Lockwasher and Lockplates	Appropriate Hydraulic Nut
mm		mm	mm	mm	mm	mm	kg			
320	H3968	144	45	Tr 340x5	400	58	24.50	HM3068	MS3068	HMV68
320	H3068	187	45	Tr 340x5	400	58	28.70	HM3068	MS3068	HMV68
320	H3168	254	55	Tr 340x5	440	72	50.00	HM3168	MS3168	HMV68
320	H3268	288	55	Tr 340x5	440	72	54.60	HM3168	MS3168	HMV68
340	H3972	144	45	Tr 360x5	420	58	25.20	HM3072	MS3072	HMV72
340	H3072	188	45	Tr 360x5	420	58	30.50	HM3072	MS3072	HMV72
340	H3172	259	58	Tr 360x5	460	75	56.00	HM3172	MS3172	HMV72
340	H3272	299	58	Tr 360x5	460	75	60.60	HM3172	MS3172	HMV72
360	H3976	164	48	Tr 380x5	450	62	31.50	HM3076	MS3076	HMV76
360	H3076	193	48	Tr 380x5	450	62	35.80	HM3076	MS3076	HMV76
360	H3176	264	60	Tr 380x5	490	77	61.70	HM3176	MS3176	HMV76
360	H3276	310	60	Tr 380x5	490	77	69.60	HM3176	MS3176	HMV76
380	H3980	168	52	Tr 400x5	470	66	35.00	HM3080	MS3080	HMV80
380	H3080	210	52	Tr 400x5	470	66	41.30	HM3080	MS3080	HMV80
380	H3180	272	62	Tr 400x5	520	82	73.00	HM3180	MS3180	HMV80
380	H3280	328	62	Tr 400x5	520	82	81.00	HM3180	MS3180	HMV80
400	H3984	168	52	Tr 420x5	490	66	36.60	HM3084	MS3084	HMV84
400	H3084	212	52	Tr 420x5	490	66	43.70	HM3084	MS3084	HMV84
400	H3184	304	70	Tr 420x5	540	90	84.20	HM3184	MS3184	HMV84
400	H3284	352	70	Tr 420x5	540	90	96.00	HM3184	MS3184	HMV84
410	H3988	189	60	Tr 440x5	520	77	58.00	HM3088	MS3088	HMV88
410	H3088	228	60	Tr 440x5	520	77	65.20	HM3088	MS3088	HMV88
410	H3188	307	70	Tr 440x5	560	90	104.00	HM3188	MS3188	HMV88
410	H3288	361	70	Tr 440x5	560	90	118.00	HM3188	MS3188	HMV88
430	H3992	189	60	Tr 460x5	540	77	60.00	HM3092	MS3092	HMV92
430	H3192	326	75	Tr 460x5	580	95	116.00	HM3192	MS3192	HMV92
430	H3292	382	75	Tr 460x5	580	95	134.00	HM3192	MS3192	HMC92
450	H3996	200	60	Tr 480x5	560	77	66.00	HM3096	MS3096	HMV96
450	H3296	397	75	Tr 480x5	620	95	153.00	HM3196	MS3196	HMV96

[1]Adapter sleeves are supplied complete with locknuts and lockwasher or lockplates.
[2]Tr means 30°. Trapezoid thread and the digits are outside diameter of thread and pitch.
[3]Adapters with a C_1 dimension use a lockplate as the locking device as shown in the illustration; otherwise, a lockwasher is used as the locking device.
NOTE: Sleeves are not sold separately.

METRIC HE ADAPTER SLEEVES FOR INCH SHAFT

- Effective tapered bore bearing assembly.
- Includes mounting sleeve, locknut and lockwasher or lockplate.
- Other dimensions may be available, consult your Timken sales engineer.

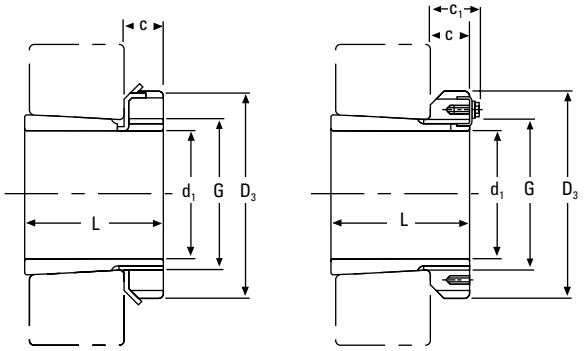

$d_1 \leq 180$ mm $d_1 \geq 200$ mm

d_1		Part Number[1]	L	C	Thread[2] G	D_3	C_1[3]	Weight	Locknuts	Lockwasher and Lockplate	Appropriate Hydraulic Nut
in.	mm		mm	mm	mm	mm	mm	kg			
¾	19.05	HE305	29	8.00	M 25x1.5	38.00	–	0.08	KM5	MB5	
1	25.40	HE306	31	8.00	M 30x1.5	45.00	–	0.10	KM6	MB6	
1 ¼	31.75	HE308	36	10.00	M 40x1.5	58.00	–	0.22	KM8	MB8	
1 ¼	31.75	HE2308	46	10.00	M 40x1.5	58.00	–	0.28	KM8	MB8	
1 ½	38.10	HE309	39	11.00	M 45x1.5	65.00	–	0.24	KM9	MB9	
1 ½	38.10	HE2309	50	11.00	M 45x1.5	65.00	–	0.31	KM9	MB9	
1 ¾	44.45	HE310	42	12.00	M 50x1.5	70.00	–	0.29	KM10	MB10	HMV10
1 ¾	44.45	HE2310	55	12.00	M 50x1.5	70.00	–	0.36	KM10	MB10	HMV10
2	50.80	HE311	45	12.00	M 55x2	75.00	–	0.35	KM11	MB11	HMV11
2	50.80	HE2311	59	12.00	M 55x2	75.00	–	0.42	KM11	MB11	HMV11
2 ¼	57.15	HE313	50	14.00	M 65x2	85.00	–	0.52	KM13	MB13	HMV13
2 ¼	57.15	HE2313	65	14.00	M 65x2	85.00	–	0.65	KM13	MB13	HMV13
2 ½	63.50	HE315	55	15.00	M 75x2	98.00	–	0.85	KM15	MB15	HMV15
2 ½	63.50	HE2315	73	15.00	M 75x2	98.00	–	1.09	KM15	MB15	HMV15
2 ¾	69.85	HE316	59	17.00	M 80x2	105.00	–	0.97	KM16	MB16	HMV16
2 ¾	69.85	HE2316	78	17.00	M 80x2	105.00	–	1.20	KM16	MB16	HMV16
3	76.20	HE317	63	18.00	M 85x2	110.00	–	1.00	KM17	MB17	HMV17
3	76.20	HE2317	82	18.00	M 85x2	110.00	–	1.30	KM17	MB17	HMV17
3 ¼	82.55	HE318	65	18.00	M 90x2	120.00	–	1.10	KM18	MB18	HMV18
3 ¼	82.55	HE319	68	19.00	M 95x2	125.00	–	1.60	KM19	MB19	HMV19
3 ¼	82.55	HE2318	86	18.00	M 90x2	120.00	–	1.40	KM18	MB18	HMV18
3 ¼	82.55	HE2319	90	19.00	M 95x2	125.00	–	2.00	KM19	MB19	HMV19
3 ½	88.90	HE320	71	20.00	M 100x2	130.00	–	1.75	KM20	MB20	HMV20
3 ½	88.90	HE3120	76	20.00	M 100x2	130.00	–	1.80	KM20	MB20	HMV20
3 ½	88.90	HE2320	97	20.00	M 100x2	130.00	–	2.20	KM20	MB20	HMV20
4	101.60	HE322	77	21.00	M 110x2	145.00	–	1.90	KM22	MB22	HMV22
4	101.60	HE3122	81	21.00	M 110x2	145.00	–	2.25	KM22	MB22	HMV22
4	101.60	HE2322	105	21.00	M 110x2	145.00	–	2.40	KM22	MB22	HMV22

[1]Adapter sleeves are supplied complete with locknuts and lockwasher or lockplates.
[2]M means metric thread and the digits are major diameter of thread and pitch.
[3]Adapters with a C_1 dimension use a lockplate as the locking device as shown in the illustration; otherwise, a lockwasher is used as the locking device.
NOTE: Sleeves are not sold separately.

Continued on next page.

METRIC HE ADAPTER SLEEVES FOR INCH SHAFT – *continued*

- Effective tapered bore bearing assembly.
- Includes mounting sleeve, locknut and lockwasher or lockplate.
- Other dimensions may be available, consult your Timken sales engineer.

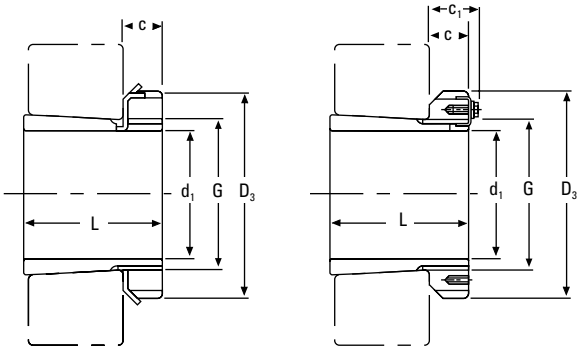

$d_1 \leq 180$ mm $\qquad$ $d_1 \geq 200$ mm

Continued from previous page.

d_1		Part Number[1]	L	C	Thread[2][3] G	D_3	C_1[4]	Weight	Locknuts	Lockwasher and Lockplate	Appropriate Hydraulic Nut
in.	mm		mm	mm	mm	mm	mm	kg			
4 ¼	107.95	HE3024	72	22.00	M 120x2	145.00	–	2.00	KML24	MBL24	HMV24
4 ¼	107.95	HE3124	88	22.00	M 120x2	155.00	–	2.64	KM24	MB24	HMV24
4 ¼	107.95	HE2324	112	22.00	M 120x2	155.00	–	3.35	KM24	MB24	HMV24
4 ½	114.30	HE3026	80	23.00	M 130x2	155.00	–	2.90	KML26	MBL26	HMV26
4 ½	114.30	HE3126	92	23.00	M 130x2	165.00	–	3.66	KM26	MB26	HMV26
4 ½	114.30	HE2326	121	23.00	M 130x2	165.00	–	4.55	KM26	MB26	HMV26
5	127.00	HE3028	82	24.00	M 140x2	165.00	–	3.16	KML28	MBL28	HMV28
5	127.00	HE3128	97	24.00	M 140x2	180.00	–	3.80	KM28	MB28	HMV28
5	127.00	HE2328	131	24.00	M 140x2	180.00	–	5.00	KM28	MB28	HMV28
5 ¼	133.35	HE3030	87	26.00	M 150x2	180.00	–	4.00	KML30	MBL30	HMV30
5 ¼	133.35	HE3130	111	26.00	M 150x2	195.00	–	5.50	KM30	MB30	HMV30
5 ¼	133.35	HE2330	139	26.00	M 150x2	195.00	–	6.80	KM30	MB30	HMV30
5 ½	139.70	HE3032	93	27.50	M 160x3	190.00	–	5.10	KML32	MBL32	HMV32
5 ½	139.70	HE3132	119	28.00	M 160x3	210.00	–	7.30	KM32	MB32	HMV32
5 ½	139.70	HE2332	147	28.00	M 160x3	210.00	–	8.80	KM32	MB32	HMV32
6	152.40	HE3034	101	28.50	M 170x3	200.00	–	5.99	KML34	MBL34	HMV34
6	152.40	HE3134	122	29.00	M 170x3	220.00	–	7.55	KM34	MB34	HMV34
6	152.40	HE2334	154	29.00	M 170x3	220.00	–	10.20	KM34	MB34	HMV34
6 ½	165.10	HE3036	109	29.50	M 180x3	210.00	–	6.83	KML36	MBL36	HMV36
6 ½	165.10	HE3136	131	30.00	M 180x3	230.00	–	7.80	KM36	MB36	HMV36
6 ½	165.10	HE2336	161	30.00	M 180x3	230.00	–	9.35	KM36	MB36	HMV36
6 ¾	171.45	HE3038	112	30.50	M 190x3	220.00	–	7.20	KML38	MBL38	HMV38
6 ¾	171.45	HE3138	141	31.00	M 190x3	240.00	–	10.80	KM38	MB38	HMV38
6 ¾	171.45	HE2338	169	31.00	M 190x3	240.00	–	12.60	KM38	MB38	HMV38
7	177.80	HE3040	120	31.50	M 200x3	240.00	–	9.35	KML40	MBL40	HMV40
7	177.80	HE3140	150	32.00	M 200x3	250.00	–	12.30	KM40	MB40	HMV40
7	177.80	HE2340	176	32.00	M 200x3	250.00	–	14.20	KM40	MB40	HMV40
8	203.20	HE3044	126	30.00	Tr 220x4	260.00	41	10.30	HM 3044	MS3044	HMV44
8	203.20	HE3144	161	35.00	Tr 220x4	280.00	–	14.70	HM44T	MB44	HMV44
8	203.20	HE2344	186	35.00	Tr 220x4	280.00	–	16.70	HM44T	MB44	HMV44

[1]Adapter sleeves are supplied complete with locknuts and lockwasher or lockplates.
[2]M means metric thread and the digits are major diameter of thread and pitch.
[3]Tr means 30°. Trapezoid thread and the digits are outside diameter of thread and pitch.
[4]Adapters with a C_1 dimension use a lockplate as the locking device as shown in the illustration; otherwise, a lockwasher is used as the locking device.
NOTE: Sleeves are not sold separately.

METRIC HA ADAPTER SLEEVES FOR INCH SHAFT

- Effective tapered bore bearing assembly.
- Includes mounting sleeve, locknut and lockwasher or lockplate.
- Other dimensions may be available, consult your Timken sales engineer.

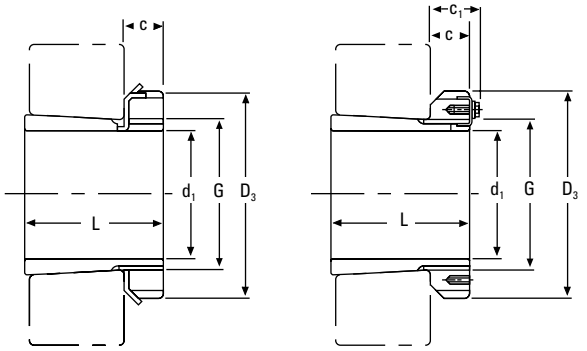

$d_1 \leq 180$ mm $d_1 \geq 200$ mm

d_1		Part Number[1]	L	C	Thread[2] G	D_3	C_1[3]	Weight	Locknuts	Lockwasher and Lockplate	Appropriate Hydraulic Nut
in.	mm		mm	mm	mm	mm	mm	kg			
15/16	23.81	HA306	31	8	M 30x1.5	45	–	0.12	KM6	MB6	
1 3/16	30.16	HA307	35	9	M 35x1.5	52	–	0.14	KM7	MB7	
1 5/16	33.34	HA308	36	10	M 40x1.5	58	–	0.19	KM8	MB8	
1 5/16	33.34	HA2308	46	10	M 40x1.5	58	–	0.22	KM8	MB8	
1 7/16	36.51	HA309	39	11	M 45x1.5	65	–	0.29	KM9	MB9	
1 7/16	36.51	HA2309	50	11	M 45x1.5	65	–	0.35	KM9	MB9	
1 11/16	42.86	HA310	42	12	M 50x1.5	70	–	0.32	KM10	MB10	HMV10
1 11/16	42.86	HA2310	55	12	M 50x1.5	70	–	0.40	KM10	MB10	HMV10
1 15/16	49.21	HA311	45	12	M 55x2	75	–	0.34	KM11	MB11	HMV11
1 15/16	49.21	HA2311	59	12	M 55x2	75	–	0.42	KM11	MB11	HMV11
2 3/16	55.56	HA313	50	14	M 65x2	85	–	0.58	KM13	MB13	HMV13
2 3/16	55.56	HA2313	65	14	M 65x2	85	–	0.75	KM13	MB13	HMV13
2 7/16	61.91	HA315	55	15	M 75x2	98	–	0.91	KM15	MB15	HMV15
2 7/16	61.91	HA2315	73	15	M 75x2	98	–	1.15	KM15	MB15	HMV15
2 11/16	68.26	HA316	59	17	M 80x2	105	–	1.05	KM16	MB16	HMV16
2 11/16	68.26	HA2316	78	17	M 80x2	105	–	1.30	KM16	MB16	HMV16
2 15/16	74.61	HA317	63	18	M 85x2	110	–	1.10	KM17	MB17	HMV17
2 15/16	74.61	HA2317	82	18	M 85x2	110	–	1.40	KM17	MB17	HMV17
3 3/16	80.96	HA318	65	18	M 90x2	120	–	1.25	KM18	MB18	HMV18
3 3/16	80.96	HA2318	86	18	M 90x2	120	–	1.50	KM18	MB18	HMV18
3 7/16	87.31	HA320	71	20	M 100x2	130	–	1.80	KM20	MB20	HMV20
3 7/16	87.31	HA3120	76	20	M 100x2	130	–	1.80	KM20	MB20	HMV20
3 7/16	87.31	HA2320	97	20	M 100x2	130	–	2.35	KM20	MB20	HMV20
3 15/16	100.01	HA322	77	21	M 110x2	145	–	2.18	KM22	MB22	HMV22
3 15/16	100.01	HA3122	81	21	M 110x2	145	–	2.25	KM22	MB22	HMV22
3 15/16	100.01	HA2322	105	21	M 110x2	145	–	2.74	KM22	MB22	HMV22
4 3/16	106.36	HA3024	72	22	M 120x2	145	–	2.25	KML24	MBL24	HMV24
4 3/16	106.36	HA3124	88	22	M 120x2	155	–	2.90	KM24	MB24	HMV24
4 3/16	106.36	HA2324	112	22	M 120x2	155	–	3.19	KM24	MB24	HMV24
4 7/16	112.71	HA3026	80	23	M 130x2	155	–	3.05	KML26	MBL26	HMV26
4 7/16	112.71	HA3126	92	23	M 130x2	165	–	3.75	KM26	MB26	HMV26
4 7/16	112.71	HA2326	121	23	M 130x2	165	–	4.74	KM26	MB26	HMV26

[1]Adapter sleeves are supplied complete with locknuts and lockwasher or lockplates.
[2]M means metric thread and the digits are major diameter of thread and pitch.
[3]Adapters with a C_1 dimension use a lockplate as the locking device as shown in the illustration; otherwise, a lockwasher is used as the locking device.

Continued on next page.

METRIC HA ADAPTER SLEEVES FOR INCH SHAFT – *continued*

- Effective tapered bore bearing assembly.
- Includes mounting sleeve, locknut and lockwasher or lockplate.
- Other dimensions may be available, consult your Timken sales engineer.

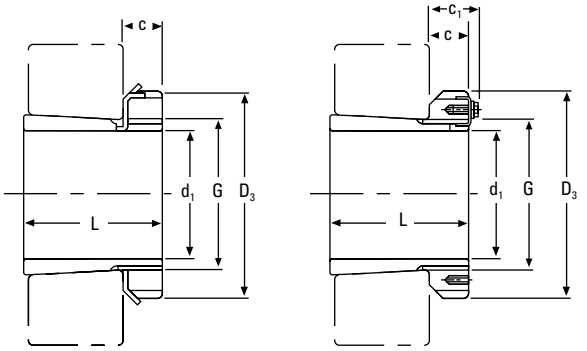

$d_1 \leq 180$ mm $\qquad$ $d_1 \geq 200$ mm

Continued from previous page.

d_1		Part Number[1]	L	C	Thread[2][3] G	D_3	C_1[4]	Weight	Locknuts	Lockwasher and Lockplate	Appropriate Hydraulic Nut
in.	mm		mm	mm	mm	mm	mm	kg			
4 15/16	125.41	HA3028	82	24	M 140x2	165	–	3.00	KML28	MBL28	HMV28
4 15/16	125.41	HA3128	97	24	M 140x2	180	–	4.10	KM28	MB28	HMV28
4 15/16	125.41	HA2328	131	24	M 140x2	180	–	5.30	KM28	MB28	HMV28
5 3/16	131.76	HA3030	87	26	M 150x2	180	–	3.89	KML30	MBL30	HMV30
5 3/16	131.76	HA3130	111	26	M 150x2	195	–	5.80	KM30	MB30	HMV30
5 3/16	131.76	HA2330	139	26	M 150x2	195	–	6.63	KM30	MB30	HMV30
5 7/16	138.11	HA3032	93	28	M 160x3	190	–	5.21	KML32	MBL32	HMV32
5 7/16	138.11	HA3132	119	28	M 160x3	210	–	7.55	KM32	MB32	HMV32
5 7/16	138.11	HA2332	147	28	M 160x3	210	–	9.40	KM32	MB32	HMV32
5 15/16	150.81	HA3034	101	29	M 170x3	200	–	5.99	KML34	MBL34	HMV34
5 15/16	150.81	HA3134	122	29	M 170x3	220	–	7.80	KM34	MB34	HMV34
5 15/16	150.81	HA2334	154	29	M 170x3	220	–	9.60	KM34	MB34	HMV34
6 7/16	163.51	HA3036	109	30	M 180x3	210	–	6.00	KML36	MBL36	HMV36
6 7/16	163.51	HA3136	131	30	M 180x3	230	–	8.15	KM36	MB36	HMV36
6 7/16	163.51	HA2336	161	30	M 180x3	230	–	9.90	KM36	MB36	HMV36
6 15/16	176.21	HA3038	112	31	M 190x3	220	–	5.80	KML38	MBL38	HMV38
6 15/16	176.21	HA3138	141	31	M 190x3	240	–	8.50	KM38	MB38	HMV38
6 15/16	176.21	HA2338	169	31	M 190x3	240	–	12.60	KM38	MB38	HMV38
7 3/16	182.56	HA3040	120	32	M 200x3	240	–	8.25	KML40	MBL40	HMV40
7 3/16	182.56	HA3140	150	32	M 200x3	250	–	11.20	KM40	MB40	HMV40
7 3/16	182.56	HA2340	176	32	M 200x3	250	–	13.90	KM40	MB40	HMV40
7 15/16	201.61	HA3044	126	30	Tr 220x4	260	41	10.30	HM3044	MS3044	HMV44
7 15/16	201.61	HA3144	161	35	Tr 220x4	280	–	14.70	HM44T	MB44	HMV44
8 15/16	227.01	HA3048	133	34	Tr 240x4	290	46	13.20	HM3048	MS3048	HMV48
9 7/16	239.71	HA3052	145	34	Tr 260x4	310	46	15.30	HM3052	MS3052	HMV52
10 7/16	265.11	HA3056	152	38	Tr 280x4	330	50	17.70	HM3056	MS3056	HMV56
10 15/16	277.81	HA3060	168	42	Tr 300x4	360	54	22.80	HM3060	MS3060	HMV60
11 15/16	303.21	HA3064	171	42	Tr 320x5	380	55	24.60	HM3064	MS3064	HMV64
12 7/16	315.91	HA3068	187	45	Tr 340x5	400	58	28.70	HM3068	MS3068	HMV68
13 7/16	341.31	HA3072	188	45	Tr 360x5	420	58	30.50	HM3072	MS3072	HMV72
13 15/16	354.01	HA3076	193	48	Tr 380x5	450	62	35.80	HM3076	MS3076	HMV76

[1]Adapter sleeves are supplied complete with locknuts and lockwasher or lockplates.
[2]M means metric thread and the digits are major diameter of thread and pitch.
[3]Tr means 30°. Trapezoid thread and the digits are outside diameter of thread and pitch.
[4]Adapters with a C_1 dimension use a lockplate as the locking device as shown in the illustration; otherwise, a lockwasher is used as the locking device.

METRIC OH HYDRAULIC ADAPTER SLEEVES

- Includes mounting sleeve, locknut and lockwasher or lockplate.
- Hydraulic assistance facilitates mounting of large bearing. Oil pump required to inject pressurized oil.
- Other dimensions may be available, consult your Timken sales engineer.

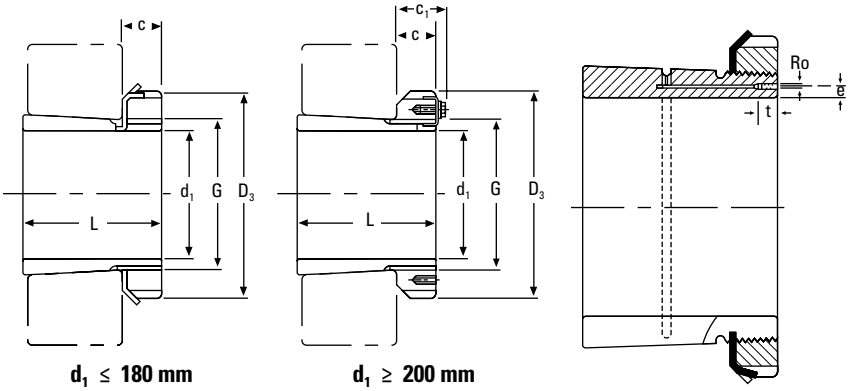

$d_1 \leq 180$ mm $d_1 \geq 200$ mm

d_1	Sleeve Part Number[1]	L	C	Thread[2][3] G	D_3	C_1[4]	Ro	e	t	Weight	Locknuts	Lockwasher and Lockplate	Appropriate Hydraulic Nut
mm		mm	mm	mm	mm	mm		mm	mm	kg			
140	OH3032H	93	27.5	M 160x3	190	–		4	7	5.21	KML32	MBL32	HMV32
140	OH3132H	119	28	M 160x3	210	–		4	7	7.67	KM32	MB32	HMV32
150	OH3034H	101	28.5	M 170x3	200	–		4	7	5.99	KML34	MBL34	HMV34
150	OH3134H	122	29	M 170x3	220	–		4	7	8.38	KM34	MB34	HMV34
160	OH3936H	87	29.5	M 180x3	210	–		4	7	5.70	KML36	MBL36	HMV36
160	OH3036H	109	29.5	M 180x3	210	–		4	7	6.83	KML36	MBL36	HMV36
160	OH3136H	131	30	M 180x3	230	–		4	7	9.50	KM36	MB36	HMV36
170	OH3938H	89	30.5	M 190x3	220	–		4	7	6.19	KML38	MBL38	HMV38
170	OH3038H	112	30.5	M 190x3	220	–		4	7	7.45	KML38	MBL38	HMV38
170	OH3138H	141	31	M 190x3	240	–		4	7	10.80	KM38	MB38	HMV38
170	OH2338H	169	31	M 190x3	240	–		4	7	12.60	KM38	MB38	HMV38
180	OH3940H	98	31.5	M 200x3	240	–		4	7	7.89	KML40	MBL40	HMV40
180	OH3040H	120	31.5	M 200x3	240	–		4	7	9.19	KML40	MBL40	HMV40
180	OH3140H	150	32	M 200x3	250	–		4	7	12.10	KM40	MB40	HMV40
180	OH2340H	176	32	M 200x3	250	–		4	7	13.90	KM40	MB40	HMV40
200	OH3944H	96	30	Tr 220x4	260	41	M6	4	7	8.16	HM3044	MS3044	HMV44
200	OH3044H	126	30	Tr 220x4	260	41	M6	4	7	10.30	HM3044	MS3044	HMV44
200	OH3144H	161	35	Tr 220x4	280	–	M6	4	7	15.10	HM44T	MB44	HMV44
200	OH2344H	186	35	Tr 220x4	280	–	M6	4	7	17.00	HM44T	MB44	HMV44
220	OH3948H	101	34	Tr 240x4	290	46	M6	4	7	11.00	HM3048	MS3048	HMV48
220	OH3048H	133	34	Tr 240x4	290	46	M6	4	7	13.20	HM3048	MS3048	HMV48
220	OH3148H	172	37	Tr 240x4	300	–	M6	4	7	17.60	HM48T	MB48	HMV48
220	OH2348H	199	37	Tr 240x4	300	–	M6	4	7	20.00	HM48T	MB48	HMV48
240	OH3952H	116	34	Tr 260x4	310	46	M6	4	7	12.80	HM3052	MS3052	HMV52
240	OH3052H	145	34	Tr 260x4	310	46	M6	4	7	15.30	HM3052	MS3052	HMV52
240	OH3152H	190	39	Tr 260x4	330	–	M6	4	7	22.30	HM52T	MB52	HMV52
240	OH2352H	211	39	Tr 260x4	330	–	M6	4	7	24.50	HM52T	MB52	HMV52

[1] Hydraulic adapter sleeves are supplied complete with locknuts and lockwasher or lockplates.
[2] M means metric thread and the digits are major diameter of thread and pitch.
[3] Tr means 30°. Trapezoid thread and the digits are outside diameter of thread and pitch.
[4] Adapters with a C_1 dimension use a lockplate as the locking device as shown in the illustration; otherwise, a lockwasher is used as the locking device.

Continued on next page.

METRIC OH HYDRAULIC ADAPTER SLEEVES – *continued*

- Includes mounting sleeve, locknut and lockwasher or lockplate.
- Hydraulic assistance facilitates mounting of large bearing. Oil pump required to inject pressurized oil.
- Other dimensions may be available, consult your Timken sales engineer.

Continued from previous page.

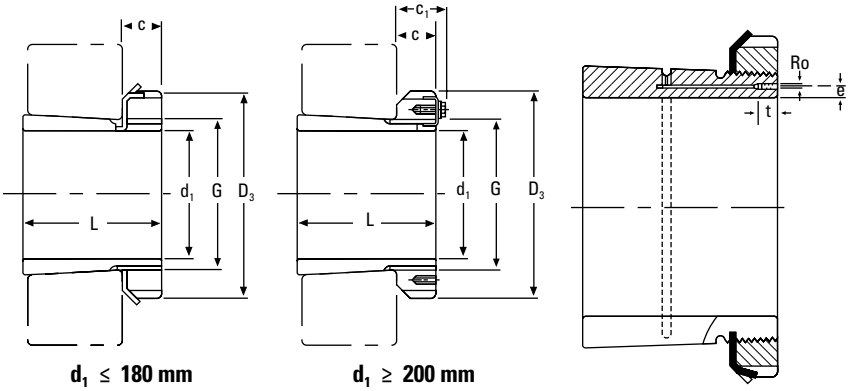

$d_1 \leq 180$ mm $d_1 \geq 200$ mm

d_1	Sleeve Part Number[1]	L	C	Thread[2] G	D_3	C_1[3]	Ro	e	t	Weight	Locknuts	Lockwasher and Lockplate	Appropriate Hydraulic Nut
mm		mm	mm	mm	mm	mm		mm	mm	kg			
260	OH3956H	121	38	Tr 280x4	330	50	M6	4	7	15.30	HM3056	MS3056	HMV56
260	OH3056H	152	38	Tr 280x4	330	50	M6	4	7	17.70	HM3056	MS3056	HMV56
260	OH3156H	195	41	Tr 280x4	350	–	M6	4	7	25.10	HM56T	MB56	HMV56
260	OH2356H	224	41	Tr 280x4	350	–	M6	4	7	28.40	HM56T	MB56	HMV56
280	OH3960H	140	42	Tr 300x4	360	54	M6	4	7	20.00	HM3060	MS3060	HMV60
280	OH3060H	168	42	Tr 300x4	360	54	M6	4	7	22.80	HM3060	MS3060	HMV60
280	OH3160H	208	40	Tr 300x4	380	53	M6	4	7	30.20	HM3160	MS3160	HMV60
280	OH3260H	240	40	Tr 300x4	380	53	M6	4	7	34.10	HM3160	MS3160	HMV60
300	OH3964H	140	42	Tr 320x5	380	55	M6	3.5	7	21.50	HM3064	MS3064	HMV64
300	OH3064H	171	42	Tr 320x5	380	55	M6	3.5	7	24.60	HM3064	MS3064	HMV64
300	OH3164H	226	42	Tr 320x5	400	56	M6	3.5	7	34.90	HM3164	MS3164	HMV64
300	OH3264H	258	42	Tr 320x54	400	56	M6	3.5	7	39.30	HM3164	MS3164	HMV64
320	OH3968H	144	45	Tr 340x5	400	58	M6	3.5	7	24.50	HM3068	MS3068	HMV68
320	OH3068H	187	45	Tr 340x5	400	58	M6	3.5	7	28.70	HM3068	MS3068	HMV68
320	OH3168H	254	55	Tr 340x5	440	72	M6	3.5	7	50.00	HM3168	MS3168	HMV68
320	OH3268H	288	55	Tr 340x5	440	72	M6	3.5	7	54.60	HM3168	MS3168	HMV68
340	OH3972H	144	45	Tr 360x5	420	58	M6	3.5	7	25.20	HM3072	MS3072	HMV72
340	OH3072H	188	45	Tr 360x5	420	58	M6	3.5	7	30.50	HM3072	MS3072	HMV72
340	OH3172H	259	58	Tr 360x5	460	75	M6	3.5	7	56.00	HM3172	MS3172	HMV72
340	OH3272H	299	58	Tr 360x5	460	75	M6	3.5	7	60.60	HM3172	MS3172	HMV72
360	OH3976H	164	48	Tr 380x5	450	62	M6	3.5	7	31.50	HM3076	MS3076	HMV76
360	OH3076H	193	48	Tr 380x5	450	62	M6	3.5	7	35.80	HM3076	MS3076	HMV76
360	OH3176H	264	60	Tr 380x5	490	77	M6	3.5	7	61.70	HM3176	MS3176	HMV76
360	OH3276H	310	60	Tr 380x5	490	77	M6	3.5	7	69.60	HM3176	MS3176	HMV76
380	OH3980H	168	52	Tr 400x5	470	66	M6	3.5	7	35.00	HM3080	MS3080	HMV80
380	OH3080H	210	52	Tr 400x5	470	66	M6	3.5	7	41.30	HM3080	MS3080	HMV80
380	OH3180H	272	62	Tr 400x5	520	82	M6	3.5	7	73.00	HM3180	MS3180	HMV80
380	OH3280H	328	62	Tr 400x5	520	82	M6	3.5	7	81.00	HM3180	MS3180	HMV80

[1]Hydraulic adapter sleeves are supplied complete with locknuts and lockwasher or lockplates.

[2]Tr means 30°. Trapezoid thread and the digits are outside diameter of thread and pitch.

[3]Adapters with a C_1 dimension use a lockplate as the locking device as shown in the illustration; otherwise, a lockwasher is used as the locking device.

Continued on next page.

Continued from previous page.

d_1	Sleeve Part Number[1]	L	C	Thread[2] G	D_3	C_1[3]	Ro	e	t	Weight	Locknuts	Lockwasher and Lockplate	Appropriate Hydraulic Nut
mm		**mm**	**mm**	**mm**	**mm**	**mm**		**mm**	**mm**	**kg**			
400	OH3984H	**168**	**52**	**Tr 420x5**	**490**	**66**	M6	3.5	7	**36.60**	HM3084	MS3084	HMV84
400	OH3084H	**212**	**52**	**Tr 420x5**	**490**	**66**	M6	3.5	7	**43.70**	HM3084	MS3084	HMV84
400	OH3184H	**304**	**70**	**Tr 420x5**	**540**	**90**	M6	3.5	7	**84.20**	HM3184	MS3184	HMV84
400	OH3284H	**352**	**70**	**Tr 420x5**	**540**	**90**	M6	3.5	7	**96.00**	HM3184	MS3184	HMV84
410	OH3988H	**189**	**60**	**Tr 440x5**	**520**	**77**	M8	6.5	12	**58.00**	HM3088	MS3088	HMV88
410	OH3088H	**228**	**60**	**Tr 440x5**	**520**	**77**	M8	6.5	12	**65.20**	HM3088	MS3088	HMV88
410	OH3188H	**307**	**70**	**Tr 440x5**	**560**	**90**	M8	6.5	12	**104.00**	HM3188	MS3188	HMV88
410	OH3288H	**361**	**70**	**Tr 440x5**	**560**	**90**	M8	6.5	12	**118.00**	HM3188	MS3188	HMV88
430	OH3992H	**189**	**60**	**Tr 460x5**	**540**	**77**	M8	6.5	12	**60.00**	HM3092	MS3092	HMV92
430	OH3092H	**234**	**60**	**Tr 460x5**	**540**	**77**	M8	6.5	12	**71.00**	HM3092	MS3092	HMV92
430	OH3192H	**326**	**75**	**Tr 460x5**	**580**	**95**	M8	6.5	12	**116.00**	HM3192	MS3192	HMV92
430	OH3292H	**382**	**75**	**Tr 460x5**	**580**	**95**	M8	6.5	12	**134.00**	HM3192	MS3192	HMV92
450	OH3996H	**200**	**60**	**Tr 480x5**	**560**	**77**	M8	6.5	12	**66.00**	HM3096	MS30/96	HMV96
450	OH3096H	**237**	**60**	**Tr 480x5**	**560**	**77**	M8	6.5	12	**75.00**	HM3096	MS30/96	HMV96
450	OH3196H	**335**	**75**	**Tr 480x5**	**620**	**95**	M8	6.5	12	**135.00**	HM3196	MS3196	HMV96
450	OH3296H	**397**	**75**	**Tr 480x5**	**620**	**95**	M8	6.5	12	**153.00**	HM3196	MS3196	HMV96
470	OH39/500H	**208**	**68**	**Tr 500x5**	**580**	**85**	M8	6.5	12	**74.30**	HM30/500	MS30/500	HMV100
470	OH31/500H	**356**	**80**	**Tr 500x5**	**630**	**100**	M8	6.5	12	**145.00**	HM31/500	MS31/500	HMV100
470	OH32/500H	**428**	**80**	**Tr 500x5**	**630**	**100**	M8	6.5	12	**166.00**	HM31/500	MS31/500	HMV100
500	OH39/530H	**216**	**68**	**Tr 530x6**	**630**	**90**	M8	6	12	**87.90**	HM30/530	MS30/530	HMV106
500	OH31/530H	**364**	**80**	**Tr 530x6**	**670**	**105**	M8	6	12	**161.00**	HM31/530	MS31/530	HMV106
500	OH32/530H	**447**	**80**	**Tr 530x6**	**670**	**105**	M8	6	12	**192.00**	HM31/530	MS31/530	HMV106
530	OH39/560H	**227**	**75**	**Tr 560x6**	**650**	**97**	M8	6	12	**95.00**	HM30/560	MS30/560	HMV112
530	OH31/560H	**377**	**85**	**Tr 560x6**	**710**	**110**	M8	6	12	**185.00**	HM31/560	MS31/560	HMV112
530	OH32/560H	**462**	**85**	**Tr 560x6**	**710**	**110**	M8	6	12	**219.00**	HM31/560	MS31/560	HMV112
560	OH39/600H	**239**	**75**	**Tr 600x6**	**700**	**97**	G1/8	8	13	**127.00**	HM30/600	MS30/600	HMV120
560	OH30/600H	**289**	**75**	**Tr 600x6**	**700**	**97**	G1/8	8	13	**147.00**	HM30/600	MS30/600	HMV120
560	OH31/600H	**399**	**85**	**Tr 600x6**	**750**	**110**	G1/8	8	13	**234.00**	HM31/600	MS31/600	HMV120
560	OH32/600H	**487**	**85**	**Tr 600x6**	**750**	**110**	G1/8	8	13	**278.00**	HM31/600	MS31/600	HMV120
600	OH39/630H	**254**	**75**	**Tr 630x6**	**730**	**97**	M8	6	12	**124.00**	HM30/630	MS30/630	HMV126
600	OH30/630H	**301**	**75**	**Tr 630x6**	**730**	**97**	M8	6	12	**138.00**	HM30/630	MS30/630	HMV126
600	OH31/630H	**424**	**95**	**Tr 630x6**	**800**	**120**	M8	6	12	**254.00**	HM31/630	MS31/630	HMV126
600	OH32/630H	**521**	**95**	**Tr 630x6**	**800**	**120**	M8	6	12	**300.00**	HM 31/630	MS31/630	HMV126

[1]Hydraulic adapter sleeves are supplied complete with locknuts and lockwasher or lockplates.
[2]Tr means 30°. Trapezoid thread and the digits are outside diameter of thread and pitch.
[3]Adapters with a C_1 dimension use a lockplate as the locking device as shown in the illustration; otherwise, a lockwasher is used as the locking device.

Continued on next page.

METRIC OH HYDRAULIC ADAPTER SLEEVES – *continued*

- Includes mounting sleeve, locknut and lockwasher or lockplate.
- Hydraulic assistance facilitates mounting of large bearing. Oil pump required to inject pressurized oil.
- Other dimensions may be available, consult your Timken sales engineer.

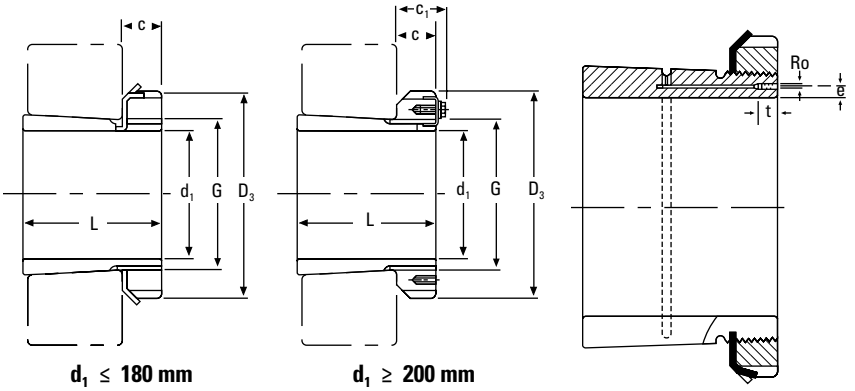

$d_1 \leq 180$ mm $d_1 \geq 200$ mm

Continued from previous page.

d_1	Sleeve Part Number[1]	L	C	Thread[2] G	D_3	C_1[3]	Ro	e	t	Weight	Locknuts	Lockwasher and Lockplate	Appropriate Hydraulic Nut
mm		mm	mm	mm	mm	mm		mm	mm	kg			
630	OH39/670H	264	80	Tr 670x6	780	102	G1/8	8	13	162.00	HM30/670	MS30/670	HMV134
630	OH30/670H	324	80	Tr 670x6	780	102	G1/8	8	13	190.00	HM30/670	MS30/670	HMV134
630	OH31/670H	456	106	Tr 670x6	850	131	G1/8	8	13	340.00	HM31/670	MS31/670	HMV134
630	OH32/670H	558	106	Tr 670x6	850	131	G1/8	8	13	401.00	HM31/670	MS31/670	HMV134
670	OH39/710H	286	90	Tr 710x7	830	112	G1/8	8	13	183.00	HM30/710	MS30/710	HMV142
670	OH30/710H	342	90	Tr 710x7	830	112	G1/8	8	13	228.00	HM30/710	MS30/710	HMV142
670	OH31/710H	467	106	Tr 710x7	900	135	G1/8	8	13	392.00	HM31/710	MS31/710	HMV142
670	OH32/710H	572	106	Tr 710x7	900	135	G1/8	8	13	459.00	HM31/710	MS31/710	HMV142
710	OH39/750H	291	90	Tr 750x7	870	112	G1/8	8	13	211.00	HM30/750	MS30/750	HMV150
710	OH30/750H	356	90	Tr 750x7	870	112	G1/8	8	13	246.00	HM30/750	MS30/750	HMV150
710	OH31/750H	493	112	Tr 750x7	950	141	G1/8	8	13	451.00	HM31/750	MS31/750	HMV150
710	OH32/750H	603	112	Tr 750x7	950	141	G1/8	8	13	526.00	HM31/750	MS31/750	HMV150
750	OH39/800H	303	90	Tr 800x7	920	112	G1/8	10	13	259.00	HM30/800	MS30/800	HMV160
750	OH31/800H	505	112	Tr 800x7	1000	141	G1/8	10	13	535.00	HM31/800	MS31/800	HMV160
750	OH32/800H	618	112	Tr 800x7	1000	141	G1/8	10	13	629.00	HM31/800	MS31/800	HMV160
800	OH39/850H	308	90	Tr 850x7	980	115	G1/8	10	13	288.00	HM30/850	MS30/850	HMV170
800	OH31/850H	536	118	Tr 850x7	1060	147	G1/8	10	13	616.00	HM31/850	MS31/850	HMV170
800	OH32/850H	651	118	Tr 850x7	1060	147	G1/8	10	13	722.00	HM31/850	MS31/850	HMV170
850	OH39/900H	326	100	Tr 900x7	1030	125	G1/8	10	13	330.00	HM30/900	MS30/900	HMV180
850	OH31/900H	557	125	Tr 900x7	1120	154	G1/8	10	13	677.00	HM31/900	MS31/900	HMV180
850	OH32/900H	660	125	Tr 900x7	1120	154	G1/8	10	13	776.00	HM31/900	MS31/900	HMV180
900	OH39/950H	344	100	Tr 950x8	1080	125	G1/8	10	13	362.00	HM30/950	MS30/950	HMV190
900	OH31/950H	583	125	Tr 950x8	1170	154	G1/8	10	13	738.00	HM31/950	MS31/950	HMV190
900	OH32/950H	675	125	Tr 950x8	1170	154	G1/8	10	13	834.00	HM31/950	MS31/950	HMV190
950	OH39/1000H	358	100	Tr 1000x8	1140	125	G1/8	10	13	407.00	HM30/1000	MS30/1000	HMV200
950	OH31/1000H	609	125	Tr 1000x8	1240	154	G1/8	10	13	842.00	HM31/1000	MS31/1000	HMV200
950	OH32/1000H	707	125	Tr 1000x8	1240	154	G1/8	10	13	952.00	HM31/1000	MS31/1000	HMV200
1000	OH39/1060H	372	100	Tr 1060x8	1200	125	G1/8	12	15	490.00	HM30/1060	MS30/1000	HMV212
1000	OH30/1060H	447	100	Tr 1060x8	1200	125	G1/8	12	15	571.00	HM30/1060	MS30/1000	HMV212
1000	OH31/1060H	622	125	Tr 1060x8	1300	154	G1/8	12	15	984.00	HM31/1060	MS31/1000	HMV212

[1]Hydraulic adapter sleeves are supplied complete with locknuts and lockwasher or lockplates.
[2]Tr means 30°. Trapezoid thread and the digits are outside diameter of thread and pitch.
[3]Adapters with a C_1 dimension use a lockplate as the locking device as shown in the illustration; otherwise, a lockwasher is used as the locking device.

METRIC AH WITHDRAWAL SLEEVES

- Sleeves used in the dismounting of tapered bore bearing from shaft.
- Effective dismounting.
- Other dimensions may be available, consult your Timken sales engineer.

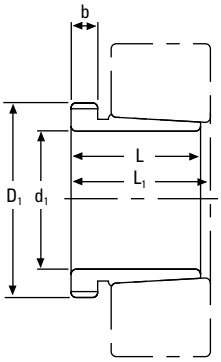

d_1	Withdrawal Sleeve Part Number	L	L_1[1]	b	Thread D_1	Weight	Appropriate Withdrawal Nut No.	Appropriate Hydraulic Nut
mm		mm	mm	mm	mm	kg		
35	AH308	29	32	6	M 45x1,5	0.09	KM9	
35	AH2308	40	43	7	M 45x1.5	0.13	KM9	
40	AH309	31	34	6	M 50x1,5	0.11	KM10	HMV10
40	AH2309	44	47	7	M 50x1.5	0.16	KM10	HMV10
45	AHX310	35	38	7	M 55x2	0.14	KM11	HMV11
45	AHX2310	50	53	9	M 55x2	0.21	KM11	HMV11
50	AHX311	37	40	7	M 60x2	0.16	KM12	HMV12
50	AHX2311	54	57	10	M 60x2	0.25	KM12	HMV12
55	AHX312	40	43	8	M 65x2	0.19	KM13	HMV13
55	AHX2312	58	61	11	M 65x2	0.30	KM13	HMV13
60	AH313G	42	45	8	M 70x2	0.35	KM14	HMV14
65	AH314G	43	47	8	M 75x2	0.24	KM15	HMV15
65	AHX2314G	64	68	12	M 75x2	0.42	KM15	HMV15
70	AH315G	45	49	8	M 80x2	0.29	KM16	HMV16
70	AHX2315G	68	72	12	M 80x2	0.48	KM16	HMV16
75	AH316	48	52	8	M 90x2	0.37	KM18	HMV18
75	AHX2316	71	75	12	M 90x2	0.60	KM18	HMV18
80	AHX317	52	56	9	M 95x2	0.43	KM19	HMV19
80	AHX2317	74	78	13	M 95x2	0.67	KM19	HMV19
85	AHX318	53	57	9	M 100x2	0.46	KM20	HMV20
85	AHX3218	63	67	10	M 100x2	0.58	KM20	HMV20
85	AHX2318	79	83	14	M 100x2	0.78	KM20	HMV20
90	AHX319	57	61	10	M 105x2	0.53	KM21	HMV21
90	AHX2319	85	89	16	M 105x2	0.89	KM21	HMV21
95	AHX320	59	63	10	M 110x2	0.60	KM22	HMV22
95	AHX3120	64	68	11	M 110x2	0.65	KM22	HMV22
95	AHX3220	73	77	11	M 110x2	0.77	KM22	HMV22
95	AHX2320	90	94	16	M 110x2	1.00	KM22	HMV22

[1]Dimension L_1 decreases as the withdrawal sleeve is driven in during mounting.

Continued on next page.

METRIC AH WITHDRAWAL SLEEVES – *continued*

- Sleeves used in the dismounting of tapered bore bearing from shaft.
- Effective dismounting.
- Other dimensions may be available, consult your Timken sales engineer.

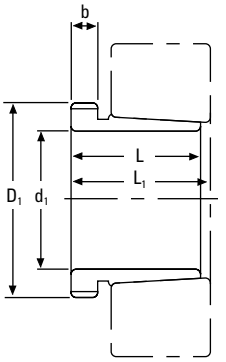

Continued from previous page.

d_1	Withdrawal Sleeve Part Number	L	L_1[1]	b	Thread[2] D_1	Weight	Appropriate Withdrawal Nut No.	Appropriate Hydraulic Nut
mm		**mm**	**mm**	**mm**	**mm**	**kg**		
105	AHX322	**63**	**67**	**12**	**M 120X2**	**0.66**	KM24	HMV24
105	AHX3122	**68**	**72**	**11**	**M 120X2**	**0.76**	KM24	HMV24
105	AH24122	**82**	**91**	**13**	**M 115x2**	**0.73**	KM23	HMV23
105	AHX3222G	**82**	**86**	**11**	**M 120X2**	**1.00**	KM24	HMV24
105	AHX2322G	**98**	**102**	**16**	**M 120X2**	**1.26**	KM24	HMV24
115	AHX3024	**60**	**64**	**13**	**M 130x2**	**0.75**	KM26	HMV26
115	AH24024	**73**	**82**	**13**	**M 125x2**	**0.65**	KM25	HMV25
115	AHX3124	**75**	**79**	**12**	**M 130x2**	**0.95**	KM26	HMV26
115	AHX3224G	**90**	**94**	**13**	**M 130x2**	**1.20**	KM26	HMV26
115	AH24124	**93**	**102**	**13**	**M 130x2**	**1.00**	KM26	HMV26
115	AHX2324G	**105**	**109**	**17**	**M 130x2**	**1.49**	KM26	HMV26
125	AHX3026	**67**	**71**	**14**	**M 140x2**	**0.93**	KM28	HMV28
125	AHX3126	**78**	**82**	**12**	**M 140x2**	**1.09**	KM28	HMV28
125	AH24026	**83**	**93**	**14**	**M 135x2**	**0.84**	KM27	HMV27
125	AH24126	**94**	**104**	**14**	**M 140x2**	**1.15**	KM28	HMV28
125	AHX3226G	**98**	**102**	**15**	**M 140x2**	**1.47**	KM28	HMV28
125	AHX2326G	**115**	**119**	**19**	**M 140x2**	**1.83**	KM28	HMV28
135	AHX3028	**68**	**73**	**14**	**M 150x2**	**1.01**	KM30	HMV30
135	AH24028	**83**	**93**	**14**	**M 145x2**	**0.91**	KM29	HMV29
135	AHX3128	**83**	**88**	**14**	**M 150x2**	**1.28**	KM30	HMV30
135	AH24128	**99**	**109**	**14**	**M 150x2**	**1.25**	KM30	HMV30
135	AHX3228G	**104**	**109**	**15**	**M 150x2**	**1.72**	KM30	HMV30
135	AHX2328G	**125**	**130**	**20**	**M 150x2**	**2.22**	KM30	HMV30
145	AHX3030	**72**	**77**	**15**	**M 160x3**	**1.15**	KM32	HMV32
145	AHX3130G	**96**	**101**	**15**	**M 160x3**	**1.64**	KM32	HMV32
145	AHX3230G	**114**	**119**	**17**	**M 160x3**	**2.07**	KM32	HMV32
145	AH24130	**115**	**126**	**15**	**M 160x3**	**1.60**	KM32	HMV32
145	AHX2330G	**135**	**140**	**24**	**M 160x3**	**2.60**	KM32	HMV32

[1]Dimension L_1 decreases as the withdrawal sleeve is driven in during mounting.
[2]M means metric thread and the digits are major diameter of thread and pitch.

Continued on next page.

Continued from previous page.

d_1	Withdrawal Sleeve Part Number	L	L_1[1]	b	Thread[2][3] D_1	Weight	Appropriate Withdrawal Nut No.	Appropriate Hydraulic Nut
mm		mm	mm	mm	mm	kg		
150	AH3032	77	82	16	M 170x3	2.06	KM34	HMV34
150	AH24032	95	106	15	M 170x3	2.27	KM34	HMV34
150	AH3132G	103	108	16	M 170x3	2.90	KM34	HMV34
150	AH24132	124	135	15	M 170x3	3.00	KM34	HMV34
150	AH3232G	124	130	20	M 170x3	3.63	KM34	HMV34
160	AH3034	85	90	17	M 180x3	2.43	KM36	HMV36
160	AH3134G	104	109	16	M 180x3	3.04	KM36	HMV36
160	AH24034	106	117	16	M 180x3	2.80	KM36	HMV36
160	AH24134	125	136	16	M 180x3	3.21	KM36	HMV36
160	AH3234G	134	140	24	M 180x3	4.35	KM36	HMV36
170	AH3136G	116	122	19	M 190x3	3.77	KM38	HMV38
170	AH3236G	140	146	24	M 190x3	4.77	KM38	HMV38
180	AH3038G	96	102	18	M 200x3	3.16	KM40	HMV40
180	AH24038	118	131	18	M 200x3	3.46	KM40	HMV40
180	AH3138G	125	131	20	M 200x3	4.38	KM40	HMV40
180	AH3238G	145	152	25	M 200x3	5.30	KM40	HMV40
180	AH24138	146	159	18	M 200x3	4.28	KM40	HMV40
190	AH3040G	102	108	19	Tr 210x4	3.57	HM42T	HMV42
190	AH24040	127	140	18	Tr 210x4	3.93	HM42T	HMV42
190	AH3140	134	140	21	Tr 220x4	5.55	HM3044	HMV44
190	AH3240	153	160	25	Tr 220x4	6.59	HM3044	HMV44
190	AH24140	158	171	18	Tr 210x4	5.10	HM42T	HMV42
200	AH3044G	111	117	20	Tr 230x4	7.10	HM46T	HMV46
200	AH24044	138	152	20	Tr 230x4	8.25	HM46T	HMV46
200	AH3144	145	151	23	Tr 240x4	10.40	HM48	HMV48
200	AH24144	170	184	20	Tr 230x4	10.20	HM46	HMV46
220	AH3948	77	83	16	Tr 250x4	5.29	HM50	HMV50
220	AH3048	116	123	21	Tr 260x4	8.75	HML52	HMV52
220	AH24048	138	153	20	Tr 250x4	9.00	HM50	HMV50
220	AH3148	154	161	25	Tr 260x4	12.00	HM52	HMV52
220	AH24148	180	195	20	Tr 260x4	12.50	HM52	HMV52
240	AH3952	94	100	18	Tr 270x4	7.06	HM54	HMV54
240	AH3052	128	135	23	Tr 280x4	10.70	HML56	HMV56
240	AH3152G	172	179	26	Tr 280x4	15.10	HM56T	HMV56
240	AH24152	202	218	22	Tr 280x4	15.40	HM56	HMV56

[1]Dimension L_1 decreases as the withdrawal sleeve is driven in during mounting.
[2]M means metric thread and the digits are major diameter of thread and pitch.
[3]Tr means 30°. Trapezoid thread and the digits are outside diameter of thread and pitch.

Continued on next page.

METRIC AH WITHDRAWAL SLEEVES – *continued*

- Sleeves used in the dismounting of tapered bore bearing from shaft.
- Effective dismounting.
- Other dimensions may be available, consult your Timken sales engineer.

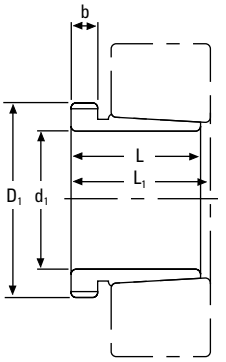

Continued from previous page.

d_1	Withdrawal Sleeve Part Number	L	L_1[1]	b	Thread[2] D_1	Weight	Appropriate Withdrawal Nut No.	Appropriate Hydraulic Nut
mm		**mm**	**mm**	**mm**	**mm**	**kg**		
260	AH3956	**94**	**100**	**18**	**Tr 290x4**	**7.70**	HM58	HMV58
260	AH3056	**131**	**139**	**24**	**Tr 300x4**	**12.00**	MB52	HMV52
260	AH3156G	**175**	**183**	**28**	**Tr 300x4**	**16.70**	HM3160	HMV60
260	AH24156	**202**	**219**	**22**	**Tr 300x4**	**16.30**	HM60	HMV60
280	AH3960	**112**	**119**	**21**	**Tr 310x5**	**10.10**	HM62	HMV62
280	AH3060	**145**	**153**	**26**	**Tr 320x5**	**14.40**	HML64	HMV64
280	AH3160G	**192**	**200**	**30**	**Tr 320x5**	**19.90**	HM3164	HMV64
280	AH24160	**224**	**242**	**24**	**Tr 320x5**	**19.50**	HM64	HMV64
280	AH3260G	**228**	**236**	**34**	**Tr 320x5**	**24.60**	HM3164	HMV64
300	AH3964	**112**	**119**	**21**	**Tr 330x5**	**10.80**	HM66	HMV66
300	AH3064G	**149**	**157**	**27**	**Tr 340x5**	**15.80**	HM3068	HMV68
300	AH3164G	**209**	**217**	**31**	**Tr 340x5**	**23.60**	HM3168	HMV68
300	AH24164	**242**	**260**	**24**	**Tr 340x5**	**21.40**	HM68	HMV68
300	AH3264G	**246**	**254**	**36**	**Tr 340x5**	**28.90**	HM3168	HMV68
320	AH3968	**112**	**119**	**21**	**Tr 360x5**	**12.40**	HML72	HMV72
320	AH3068G	**162**	**171**	**28**	**Tr 360x5**	**18.60**	HM3072	HMV72
320	AH3168G	**225**	**234**	**33**	**Tr 360x5**	**27.60**	HM3172	HMV72
320	AH3268G	**264**	**273**	**38**	**Tr 360x5**	**33.70**	HM3172	HMV72
320	AH24168	**269**	**288**	**26**	**Tr 360x5**	**27.10**	HM72	HMV72
340	AH3972	**112**	**119**	**21**	**Tr 380x5**	**13.10**	HML76	HMV76
340	AH3072G	**167**	**176**	**30**	**Tr 380x5**	**20.40**	HM3076	HMV76
340	AH3172G	**229**	**238**	**35**	**Tr 380x5**	**29.90**	HM3176	HMV76
340	AH24172	**269**	**289**	**26**	**Tr 380x5**	**29.60**	HM76	HMV76
340	AH3272G	**274**	**283**	**40**	**Tr 380x5**	**37.50**	HM3176	HMV76

[1]Dimension L_1 decreases as the withdrawal sleeve is driven in during mounting.
[2]Tr means 30°. Trapezoid thread and the digits are outside diameter of thread and pitch.

Continued on next page.

Continued from previous page.

d_1	Withdrawal Sleeve Part Number	L	L_1[1]	b	Thread[2] D_1	Weight	Appropriate Withdrawal Nut No.	Appropriate Hydraulic Nut
mm		mm	mm	mm	mm	kg		
360	AH3976	130	138	22	Tr 400x5	15.90	HML80	HMV80
360	AH3076G	170	180	31	Tr 400x5	22.10	HM3080	HMV80
360	AH3176G	232	242	36	Tr 400x5	32.20	HM3180	HMV80
360	AH24176	271	291	28	Tr 400x5	31.30	HM80	HMV80
360	AH3276G	284	294	42	Tr 400x5	41.50	HM3180	HMV80
380	AH3980	130	138	22	Tr 420x5	17.20	HML84	HMV84
380	AH3080G	183	193	33	Tr 420x5	25.40	HM3084	HMV84
380	AH3280G	302	312	44	Tr 420x5	47.40	HM3184	HMV84
400	AH3984	130	138	22	Tr 440x5	18.10	HML88	HMV88
400	AH3084G	186	196	34	Tr 440x5	27.30	HM3088	HMV88
400	AH24084	230	252	30	Tr 440x5	29.00	HML88	HMV88
400	AH3184G	266	276	40	Tr 440x5	42.30	HM3188	HMV88
400	AH24184	310	332	30	Tr 440x5	40.30	HM88	HMV88
400	AH3284G	321	331	46	Tr 440x5	54.00	HM3188	HMV88
420	AH3988	145	153	25	Tr 460x5	21.50	HML92	HMV92
420	AHX3088G	194	205	35	Tr 460x5	30.10	HM3092	HMV92
420	AH24088	242	264	30	Tr 460x5	31.90	HML92	HMV92
420	AHX3188G	270	281	42	Tr 460x5	42.30	HM3192	HMV92
420	AH24188	310	332	30	Tr 460x5	42.30	HM92	HMV92
420	AHX3288	330	341	48	Tr 460x5	63.80	HM3192	HMV92
420	AHX3288G	330	341	48	Tr 460x5	58.80	HM3192	HMV92
440	AH3992	145	153	25	Tr 480x5	22.50	HML96	HMV96
440	AHX3092G	202	213	37	Tr 480x5	33.10	HM3096	HMV96
440	AH24092	250	273	32	Tr 480x5	34.70	HML96	HMV96
440	AHX3192G	285	296	43	Tr 480x5	50.80	HML3196	HMV96
440	AH24192	332	355	32	Tr 480x5	47.60	HM96	HMV96
440	AHX3292G	349	360	50	Tr 480x5	66.30	HM3196	HMV96
460	AH3996	158	167	28	Tr 500x5	26.00	HML100	HMV100
460	AH24096	250	273	32	Tr 500x5	36.60	HML100	HMV100
460	AHX3196G	295	307	45	Tr 500x5	55.50	HM31/500	HMV100
460	AH24196	340	363	32	Tr 500x5	52.70	HM100	HMV100
460	AHX3296G	364	376	52	Tr 500x5	73.40	HM31/500	HMV100
710	AH32/750	540	556	65	Tr 800x7	317.00	HM31/800	HMV160

[1]Dimension L_1 decreases as the withdrawal sleeve is driven in during mounting.
[2]Tr means 30°. Trapezoid thread and the digits are outside diameter of thread and pitch.

METRIC AOH HYDRAULIC WITHDRAWAL SLEEVES

- Sleeves used in the dismounting of tapered bore bearing from shaft.
- Hydraulic assistance facilitates dismounting of large bearing. Oil pump required to inject pressurized oil.
- Other dimensions may be available, consult your Timken sales engineer.

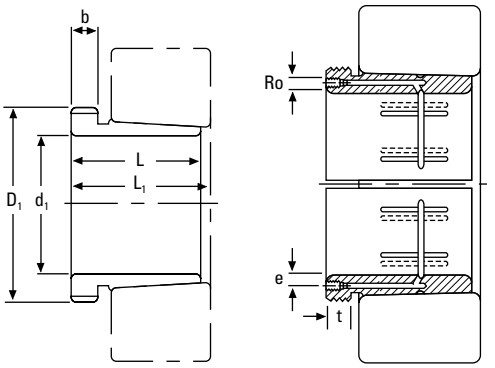

d_1	Withdrawal Sleeve Part Number	L	L_1[1]	b	Ro	e	t	Thread[2] D_1	Weight	Appropriate Withdrawal Nut No.	Appropriate Hydraulic Nut
mm		mm	mm	mm		mm	mm	mm	kg		
200	AOH3044G	111	117	20	G ⅛	6.5	12	Tr 230x4	7.29	HM46T	HMV46
200	AOH2244	130	136	20	G ¼	9	15	Tr 240x4	9.1	HM3048	HMV48
200	AOH24044	138	152	20	G ⅛	6.5	12	Tr 230x4	8.25	HM46T	HMV46
200	AOH3144	145	151	23	G ¼	9	15	Tr 240x4	10.4	HM3048	HMV48
200	AOH24144	170	184	20	G ⅛	6.5	12	Tr 230x4	10.2	HM46T	HMV46
200	AOH2344	181	189	30	G ¼	9	15	Tr 240x4	13.5	HM3048	HMV48
220	AOH3948	77	83	16	M 8	7.5	12	Tr 250x4	5.29	HM50	HMV50
220	AOH3048	116	123	21	G ¼	9	15	Tr 260x4	8.75	HM3052	HMV52
220	AOH24048	138	153	20	G ⅛	6.5	12	Tr 250x4	9	HM50T	HMV50
220	AOH3148	154	161	25	G ¼	9	15	Tr 260x4	12	HM3052	HMV52
220	AOH24148	180	195	20	G ¼	9	15	Tr 260x4	12.5	HM3052	HMV52
220	AOH2348	189	197	30	G ¼	9	15	Tr 260x4	15.5	HM3052	HMV52
240	AOH3952	94	100	18	M 8	7.5	12	Tr 270x4	7.06	HM54	HMV54
240	AOH3052	128	135	23	G ¼	9	15	Tr 280x4	10.7	HM3056	HMV56
240	AOH2252G	155	161	23	G ¼	9	15	Tr 280x4	13	HM3056	HMV56
240	AOH24052G	162	178	22	G ⅛	6.5	12	Tr 280x4	12.3	HM3056	HMV56
240	AOH3152G	172	179	26	G ¼	9	15	Tr 280x4	15.5	HM3056	HMV56
240	AOH24152	202	218	22	G ¼	9	15	Tr 280x4	15.4	HM3056	HMV56
240	AOH2352G	205	213	30	G ¼	9	15	Tr 280x4	18.9	HM3056	HMV56
260	AOH3956	94	100	18	M 8	7.5	12	Tr 290x4	7.07	HM58	HMV58
260	AOH3056	131	139	24	G ¼	9	15	Tr 300x4	12	HM3060	HMV60
260	AOH2256G	155	163	24	G ¼	9	15	Tr 300x4	14.6	HM3160	HMV60
260	AOH24056G	162	179	22	G ⅛	6.5	12	Tr 300x4	13.4	HM3160	HMV60
260	AOH3156G	175	183	28	G ¼	9	15	Tr 300x4	17.1	HM3160	HMV60
260	AOH24156	202	219	22	G ¼	9	15	Tr 300x4	16.3	HM3160	HMV60
260	AOH2356G	212	220	30	G ¼	9	15	Tr 300x4	21.3	HM3160	HMV60

[1]Dimension L_1 decreases as the hydraulic withdrawal sleeve is driven in during mounting.
[2]Tr means 30°. Trapezoid thread and the digits are outside diameter of thread and pitch.

Continued on next page.

Continued from previous page.

d_1	Withdrawal Sleeve Part Number	L	L_1[1]	b	Ro	e	t	Thread[2] D_1	Weight	Appropriate Withdrawal Nut No.	Appropriate Hydraulic Nut
mm		mm	mm	mm		mm	mm	mm	kg		
280	AOH3960	112	119	21	M 8	7.5	12	Tr 310x5	10.1	HM62	HMV62
280	AOH3060	145	153	26	G ¼	9	15	Tr 320x5	14.4	HM3064	HMV64
280	AOH2260G	170	178	26	G ¼	9	15	Tr 320x5	17.5	HM3164	HMV64
280	AOH24060G	184	202	24	G ⅛	6.5	12	Tr 320x5	16.4	HM3164	HMV64
280	AOH3160G	192	200	30	G ¼	9	15	Tr 320x5	20.4	HM3164	HMV64
280	AOH24160	224	242	24	G ¼	9	15	Tr 320x5	20.2	HM3164	HMV64
280	AOH3260G	228	236	34	G ¼	9	15	Tr 320x5	23.4	HM3164	HMV64
300	AOH3964	112	119	21	M 8	7.5	12	Tr 330x5	10.8	HM66	HMV66
300	AOH3064G	149	157	27	G ¼	9	15	Tr 340x5	15.6	HM3068	HMV68
300	AOH2264G	180	190	27	G ¼	9	15	Tr 340x5	19.7	HM3168	HMV68
300	AOH24064G	184	202	24	G ⅛	6.5	12	Tr 340x5	17.5	HM3168	HMV68
300	AOH3164G	209	217	31	G ¼	9	15	Tr 340x5	23.6	HM3168	HMV68
300	AOH24164	242	260	24	G ¼	9	15	Tr 340x5	21.4	HM3168	HMV68
300	AOH3264G	246	254	36	G ¼	9	15	Tr 340x5	28.9	HM3168	HMV68
320	AOH3968	112	119	21	M 8	7.5	12	Tr 360x5	12.4	HML72	HMV72
320	AOH3068G	162	171	28	G ¼	9	15	Tr 360x5	18.6	HM3072	HMV72
320	AOH24068	206	225	26	G ¼	9	15	Tr 360x5	21.7	HM3172	HMV72
320	AOH3168G	225	234	33	G ¼	9	15	Tr 360x5	27.6	HM3172	HMV72
320	AOH3268G	264	273	38	G ¼	9	15	Tr 360x5	31.9	HM3172	HMV72
320	AOH24168	269	288	26	G ¼	9	15	Tr 360x5	27.1	HM3172	HMV72
340	AOH3972	112	119	21	M 8	7.5	12	Tr 380x5	13.1	HML76	HMV76
340	AOH3072G	167	176	30	G ¼	9	15	Tr 380x5	20.4	HM3076	HMV76
340	AOH24072	206	226	26	G ¼	9	15	Tr 380x5	22.7	HM3176	HMV76
340	AOH3172G	229	238	35	G ¼	9	15	Tr 380x5	30.6	HM3176	HMV76
340	AOH24172	269	289	26	G ¼	9	15	Tr 380x5	30.0	HM3176	HMV76
340	AOH3272G	274	283	40	G ¼	9	15	Tr 380x5	35.4	HM3176	HMV76
360	AOH3976	130	138	22	M 8	7.5	12	Tr 400x5	15.9	HML80	HMV80
360	AOH3076G	170	180	31	G ¼	9	15	Tr 400x5	22.7	HM3080	HMV80
360	AOH24076	208	228	28	G ¼	9	15	Tr 400x5	23.7	HM3180	HMV80
360	AOH3176G	232	242	36	G ¼	9	15	Tr 400x5	32.9	HM3180	HMV80
360	AOH24176	271	291	28	G ¼	9	15	Tr 400x5	31.3	HM3180	HMV80
360	AOH3276G	284	294	42	G ¼	9	15	Tr 400x5	42.1	HM3180	HMV80
380	AOH3980	130	138	22	M 8	7.5	12	Tr 420x5	17.2	HML84	HMV84

[1]Dimension L_1 decreases as the hydraulic withdrawal sleeve is driven in during mounting.
[2]Tr means 30°. Trapezoid thread and the digits are outside diameter of thread and pitch.

Continued on next page.

METRIC AOH HYDRAULIC WITHDRAWAL SLEEVES – *continued*

- Sleeves used in the dismounting of tapered bore bearing from shaft.
- Hydraulic assistance facilitates dismounting of large bearing. Oil pump required to inject pressurized oil.
- Other dimensions may be available, consult your Timken sales engineer.

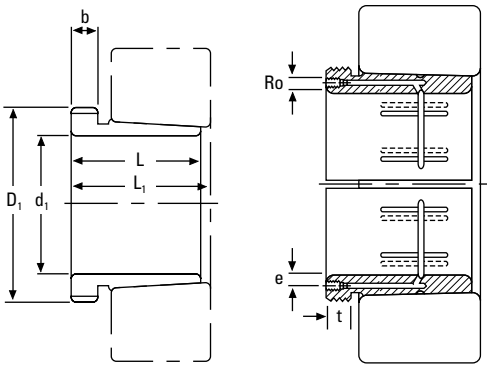

Continued from previous page.

d_1	Withdrawal Sleeve Part Number	L	L_1[1]	b	Ro	e	t	Thread[2] D_1	Weight	Appropriate Withdrawal Nut No.	Appropriate Hydraulic Nut
mm		**mm**	**mm**	**mm**		**mm**	**mm**	**mm**	**kg**		
380	AOH3080G	**183**	**193**	**33**	G ¼	**9**	**15**	**Tr 420x5**	**26.1**	HM3084	HMV84
380	AOH24080	**228**	**248**	**28**	G ¼	**9**	**15**	**Tr 420x5**	**27.1**	HM3184	HMV84
380	AOH3180G	**240**	**250**	**38**	G ¼	**9**	**15**	**Tr 420x5**	**36.1**	HM3184	HMV84
380	AOH24180	**278**	**298**	**28**	G ¼	**9**	**15**	**Tr 420x5**	**35.0**	HM3184	HMV84
380	AOH3280G	**302**	**312**	**44**	G ¼	**9**	**15**	**Tr 420x5**	**48.0**	HM3184	HMV84
400	AOH3984	**130**	**138**	**22**	M 8	**7.5**	**12**	**Tr 440x5**	**18.1**	HML88	HMV88
400	AOH3084G	**186**	**196**	**34**	G ¼	**9**	**15**	**Tr 440x5**	**27.3**	HM3088	HMV88
400	AOH24084	**230**	**252**	**30**	G ¼	**9**	**15**	**Tr 440x5**	**29.0**	HM3188	HMV88
400	AOH3184G	**266**	**276**	**40**	G ¼	**9**	**15**	**Tr 440x5**	**42.3**	HM3188	HMV88
400	AOH24184	**310**	**332**	**30**	G ¼	**9**	**15**	**Tr 440x5**	**40.3**	HM3188	HMV88
400	AOH3284G	**321**	**331**	**46**	G ¼	**9**	**15**	**Tr 440x5**	**54.0**	HM3188	HMV88
420	AOH3988	**145**	**153**	**25**	Rc ⅛	**8.5**	**14**	**Tr 460x5**	**21.5**	HML92	HMV92
420	AOHX3088G	**194**	**205**	**35**	G ¼	**9**	**15**	**Tr 460x5**	**31.0**	HM3092	HMV92
420	AOHX3188G	**270**	**281**	**42**	G ¼	**9**	**15**	**Tr 460x5**	**46.0**	HM3192	HMV92
420	AOHX3288	**330**	**341**	**48**	G ¼	**14.5**	**15**	**Tr 480x5**	**63.8**	HM3196	HMV96
420	AOHX3288G	**330**	**341**	**48**	G ¼	**9**	**15**	**Tr 460x5**	**64.5**	HM3192	HMV92
440	AOH3992	**145**	**153**	**25**	Rc ⅛	**8.5**	**14**	**Tr 480x5**	**22.5**	HML96	HMV96
440	AOHX3092G	**202**	**213**	**37**	G ¼	**9**	**15**	**Tr 480x5**	**34.0**	HM3096	HMV96
440	AOH24092	**250**	**273**	**32**	G ¼	**9**	**15**	**Tr 480x5**	**34.7**	HM3196	HMV96
440	AOHX3192G	**285**	**296**	**43**	G ¼	**9**	**15**	**Tr 480x5**	**51.5**	HM3196	HMV96
440	AOH24192	**332**	**355**	**32**	G ¼	**9**	**15**	**Tr 480x5**	**47.4**	HM3196	HMV96
440	AOHX3292	**349**	**360**	**50**	G ¼	**15**	**15**	**Tr 510x6**	**74.8**	HM102T	HMV102
440	AOHX3292G	**349**	**360**	**50**	G ¼	**9**	**15**	**Tr 480x5**	**80.0**	HM3196	HMV96

[1]Dimension L_1 decreases as the hydraulic withdrawal sleeve is driven in during mounting.
[2]Tr means 30°. Trapezoid thread and the digits are outside diameter of thread and pitch.

Continued on next page.

Continued from previous page.

d_1	Withdrawal Sleeve Part Number	L	L_1[1]	b	Ro	e	t	Thread[2] D_1	Weight	Appropriate Withdrawal Nut No.	Appropriate Hydraulic Nut
mm		mm	mm	mm		mm	mm	mm	kg		
460	AOH3996	158	167	28	Rc ⅛	8.5	14	Tr 500x5	26.0	HML100	HMV100
460	AOHX3096G	205	217	38	G ¼	9	15	Tr 500x5	34.0	HM30/500	HMV100
460	AOH24096	250	273	32	G ¼	9	15	Tr 500x5	36.3	HM31/500	HMV100
460	AOHX3196G	295	307	45	G ¼	9	15	Tr 500x5	63.0	HM31/500	HMV100
460	AOH24196	340	363	32	G ¼	9	15	Tr 500x5	53.7	HM31/500	HMV100
460	AOHX3296	364	376	52	G ¼	15.5	15	Tr 530x6	82.1	HM31/530	HMV106
460	AOHX3296G	364	376	52	G ¼	9	15	Tr 500x5	81.0	HM31/500	HMV100
480	AOH39/500	162	172	32	Rc ⅛	8.5	14	Tr 530x6	30.1	HML106	HMV106
480	AOHX30/500G	209	221	40	G ¼	9	15	Tr 530x6	41.0	HM30/530	HMV106
480	AOHX31/500G	313	325	47	G ¼	9	15	Tr 530x6	66.5	HM31/530	HMV106
480	AOH241/500	360	383	35	G ¼	9	15	Tr 530x6	59.6	HM31/530	HMV106
480	AOHX32/500	393	405	54	G ¼	16.5	15	Tr 550x6	94.6	HM110T	HMV110
480	AOHX32/500G	393	405	54	G ¼	9	15	Tr 530x6	89.5	HM31/530	HMW106
500	AOH30/530	230	242	45	G ¼	10	15	Tr 560x6	63.5	HM30/560	HMV112
500	AOH240/530G	285	309	35	G ¼	9	15	Tr 560x6	64.5	HM31/560	HMV112
500	AOH31/530	325	337	53	G ¼	10	15	Tr 560x6	93.5	HM31/560	HMV112
500	AOH241/530G	370	394	35	G ¼	9	15	Tr 560x6	92.0	HM31/560	HMV112
500	AOH32/530G	412	424	57	G ¼	10	15	Tr 560x6	127.0	HM31/560	HMV113
530	AOH31/560	335	347	55	G ¼	11	15	Tr 600x6	107.0	HM31/600	HMV120
530	AOH241/560G	393	417	38	G ¼	9	15	Tr 600x6	107.0	HM31/600	HMV120
570	AOH30/600	245	259	45	G ¼	11	15	Tr 630x6	77.0	HM30/630	HMV126
570	AOH31/600	355	369	55	G ¼	11	15	Tr 630x6	120.0	HM31/630	HMV126
570	AOH241/600	413	439	38	G ¼	9	15	Tr 630x6	120.0	HM31/630	HMV126
570	AOH32/600G	445	459	55	G ¼	11	15	Tr 630x6	159.0	HM31/630	HMV126
600	AOH30/630	258	272	45	G ¼	11	15	Tr 670x6	88.5	HM30/670	HMV134
600	AOH31/630	375	389	60	G ¼	11	15	Tr 670x6	139.0	HM31/670	HMV134
600	AOH241/630G	440	466	40	G ¼	9	15	Tr 670x6	139.0	HM31/670	HMV134
600	AOH32/630G	475	489	63	G ¼	11	15	Tr 670x6	188.0	HM31/670	HMV134
630	AOH30/670	280	294	50	G ¼	12	15	Tr 710x7	125.0	HM30/710	HMV142
630	AOH241/670	452	478	40	G ¼	12	15	Tr 710x7	180.0	HM31/710	HMV142
630	AOH32/670G	500	514	62	G ¼	12	15	Tr 710x7	252.0	HM31/710	HMV142
670	AOH32/710G	515	531	65	G ¼	15	15	Tr 750x7	278.0	HM31/750	HMV150
710	AOH30/750	300	316	50	G ¼	15	15	Tr 800x7	145.0	HM30/800	HMV160

[1]Dimension L_1 decreases as the hydraulic withdrawal sleeve is driven in during mounting.
[2]Tr means 30°. Trapezoid thread and the digits are outside diameter of thread and pitch.

Continued on next page.

METRIC AOH HYDRAULIC WITHDRAWAL SLEEVES – *continued*

- Sleeves used in the dismounting of tapered bore bearing from shaft.
- Hydraulic assistance facilitates dismounting of large bearing. Oil pump required to inject pressurized oil.
- Other dimensions may be available, consult your Timken sales engineer.

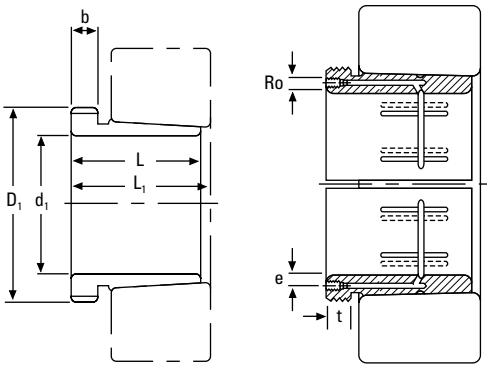

Continued from previous page.

d_1	Withdrawal Sleeve Part Number	L	L_1[1]	b	Ro	e	t	Thread[2] D_1	Weight	Appropriate Withdrawal Nut No.	Appropriate Hydraulic Nut
mm		**mm**	**mm**	**mm**		**mm**	**mm**	**mm**	**kg**		
710	AOH31/750	**425**	**441**	**60**	G ¼	**15**	**15**	**Tr 800x7**	**238.0**	HM31/800	HMV160
710	AOH32/750	**540**	**556**	**65**	G ¼	**15**	**15**	**Tr 800x7**	**320.0**	HM31/800	HMV160
750	AOH30/800	**308**	**326**	**50**	G ¼	**15**	**15**	**Tr 850x7**	**204.0**	HM30/850	HMV170
750	AOH31/800	**438**	**456**	**63**	G ¼	**15**	**15**	**Tr 850x7**	**305.0**	HM31/850	HMV170
750	AOH32/800G	**550**	**568**	**67**	G ¼	**15**	**15**	**Tr 850x7**	**401.0**	HM31/850	HMV170
800	AOH30/850	**325**	**343**	**53**	G ¼	**15**	**15**	**Tr 900x7**	**230.0**	HM30/900	HMV180
800	AOH31/850	**462**	**480**	**62**	G ¼	**15**	**15**	**Tr 900x7**	**345.0**	HM31/900	HMV180
800	AOH32/850	**585**	**603**	**70**	G ¼	**15**	**15**	**Tr 900x7**	**461.0**	HM31/900	HMV180
850	AOH30/900	**335**	**355**	**55**	G ¼	**15**	**15**	**Tr 950x8**	**250.0**	HM30/950	HMV190
850	AOH240/900	**430**	**475**	**55**	G ¼	**15**	**15**	**Tr 950x8**	**296.0**	HM31/950	HMV190
850	AOH31/900	**475**	**495**	**63**	G ¼	**15**	**15**	**Tr 950x8**	**379.0**	HM31/950	HMV190
850	AOH32/900	**585**	**605**	**70**	G ¼	**15**	**15**	**Tr 950x8**	**489.0**	HM31/950	HMV190
900	AOH30/950	**355**	**375**	**55**	G ¼	**15**	**15**	**Tr 1000x8**	**285.0**	HM30/1000	HMV200
900	AOH31/950	**500**	**520**	**62**	G ¼	**15**	**15**	**Tr 1000x8**	**426.0**	HM31/1000	HMV200
900	AOH32/950	**600**	**620**	**70**	G ¼	**15**	**15**	**Tr 1000x8**	**533.0**	HM31/1000	HMV200
950	AOH30/1000	**365**	**387**	**57**	G ¼	**15**	**15**	**Tr 1060x8**	**318.0**	HM30/1060	HMV212
950	AOH31/1000	**525**	**547**	**63**	G ¼	**15**	**15**	**Tr 1060x8**	**485.0**	HM31/1060	HMV212
950	AOH32/1000	**630**	**652**	**70**	G ¼	**15**	**15**	**Tr 1060x8**	**608.0**	HM31/1060	HMV212
950	AOH241/1000	**645**	**695**	**65**	G ¼	**15**	**15**	**Tr 1060x8**	**519.0**	HM31/1060	HMV212
1000	AOH30/1060	**385**	**407**	**60**	G ¼	**15**	**15**	**Tr 1120x8**	**406.0**	HM30/1120	HMV224
1000	AOH31/1060	**540**	**562**	**65**	G ¼	**15**	**15**	**Tr 1120x8**	**599.0**	HM31/1120	HMV224
1000	AOH241/1060	**665**	**715**	**65**	G ¼	**15**	**15**	**Tr 1120x8**	**652.0**	HM31/1120	HMV224

[1]Dimension L_1 decreases as the hydraulic withdrawal sleeve is driven in during mounting.
[2]Tr means 30°. Trapezoid thread and the digits are outside diameter of thread and pitch.

METRIC HMV HYDRAULIC NUTS

INTRODUCTION

- Designed to install and remove tapered bore bearings with minimal effort.
- Allow better control of the bearing internal clearance reduction without damaging the bearing or other components.
- Substantially reduces downtime during installation or removal of tapered bore bearings.

DESCRIPTION

- Consist of a female threaded ring and a male ring with two O-ring seals.
- All hydraulic nuts are supplied with:
  - Quick connection fittings (male ¼ inch B.S.P. and female ⅜ inch N.P.T.).
  - Two pipe plugs ¼ inch B.S.P.
  - One set of spare O-rings.

ORDERING COMPONENTS:

- To order spare components for the hydraulic nuts, order part numbers as listed below:
  - O-ring Seal Kits:
    Use the hydraulic nut part number plus the number 132.
    Example: HMVC 40/132
  - Pipe Plug ¼ inch B.S.P.:
    Use the hydraulic nut part number plus the number 647.
    Example: HMVC 40/647
  - Quick Connection Fittings (male ¼ inch B.S.P. and female ⅜ inch N.P.T.): Use the hydraulic nut part number plus the number 849.
    Example: HMVC 40/849

ENGINEERING SERVICES

- Special applications should be referred to a Timken sales engineer for review.

INSTRUCTIONS

- When the hydraulic nut is used, the piston must be in the innermost position.
- For this operation, please ensure the valve of the hydraulic hose is disconnected from the nut so the nut is not under pressure.
- To contract the piston inside the female threaded ring, insert a rod or bar in one of the four drilled holes located on the outside diameter of the female threaded ring.
- Screw the hydraulic nut on the thread with the piston in contact with the surface, until the groove machined on the outside diameter of the piston near the outboard face is level with the face of the female threaded ring.
- One of the two threaded holes must be plugged with the ¼" B.S.P. pipe plug before the hydraulic nut is pressurized.
- The maximum pressure permissible in the hydraulic nut is 14000 psi (110 Kpa).
- The oil viscosity suggested is 1400 SUS (300cSt) at operating temperature (SAE 90 oil).
- To avoid overextension of the piston, a second groove has been machined on the outside diameter of the piston inboard used to judge contraction.
- When this second groove is level with the face of the female threaded ring, the piston has reached its length of travel as shown in the illustration. If the second groove of the piston travels past the face of the female threaded ring, the hydraulic nut can be damaged.
- Should the oil start to leak from the piston area, it is certain that the O-ring seals are damaged or worn and need to be replaced.
- When the hydraulic nut is not in use, ensure that the threaded holes are plugged to prevent entry of contaminants in the piston cavity.
- To help prevent against corrosion during storage, apply a coat of light oil on the hydraulic nut surfaces.

Installation

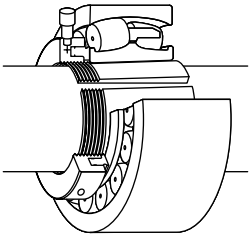

Fig. 51. Hydraulic nut used to mount the bearing on a pull-type sleeve.

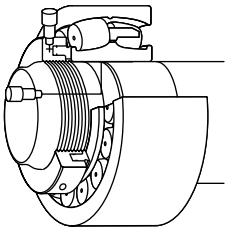

Fig. 52. Hydraulic nut used to mount the bearing on tapered journal.

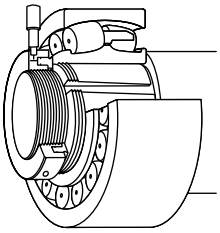

Fig. 53. Hydraulic nut used to mount the bearing on a push-type adapter sleeve.

Removal

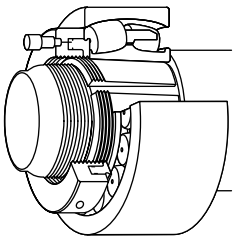

Fig. 54. Hydraulic nut used to withdraw a push-type adapter sleeve.

⚠ WARNING
Failure to observe the following warning could create a risk of death or serious injury.

Proper maintenance and handling practices are critical. Always follow installation instructions and maintain proper lubrication.

METRIC HMV HYDRAULIC NUTS

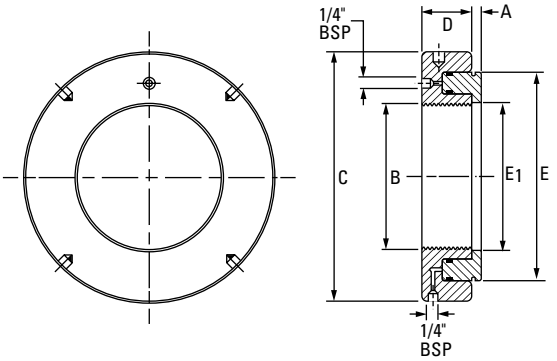

Part Number	Thread[1] B	Dimensions					Piston Length of Travel	Piston Area	Assembly Weight
		C	D	E	E_1	A			
	mm	mm	mm	mm	mm	mm	mm	mm^2	kg.
HMV10	M 50X1.5	114	38	86	51	4	5	2900	2.5
HMV12	M 60X2	125	38	94	61	5	5	3200	2.8
HMV13	M 65X2	135	38	101	66	5	5	3500	3.0
HMV14	M 70X2	140	38	107	71	5	5	3900	3.3
HMV15	M 75X2	145	38	112	76	5	5	4100	3.5
HMV16	M 80X2	150	38	117	81	5	5	4200	3.8
HMV17	M 85X2	155	38	122	86	5	5	4400	3.9
HMV18	M 90X2	160	38	127	91	5	5	4800	4.1
HMV19	M 95X2	165	38	133	96	5	5	5000	4.4
HMV20	M 100X2	170	38	138	101	6	5	5200	4.5
HMV21	M 105X2	175	38	143	106	6	5	5400	5.4
HMV22	M 110X2	180	38	149	111	6	5	5700	5.7
HMV23	M 115X2	185	38	154	116	6	5	5900	5.1
HMV24	M 120X2	190	38	159	121	6	5	6100	5.3
HMV25	M 125X2	195	38	164	126	6	5	6300	5.4
HMV26	M 130X2	200	38	170	131	6	5	6500	5.7
HMV27	M 135X2	205	38	175	136	6	5	6700	5.9
HMV28	M 140X2	210	38	180	141	7	5	6900	6.1
HMV29	M 145X2	215	39	186	146	7	5	7300	6.5
HMV30	M 150X2	220	39	190	151	7	5	7500	6.6
HMV31	M 155X3	225	39	198	156	7	5	8100	6.9
HMV32	M 160X3	235	40	206	161	7	6	8600	7.7
HMV33	M 165X3	240	40	209	166	7	6	9000	8.0
HMV34	M 170X3	245	41	215	171	7	6	9500	8.4
HMV36	M 180X3	255	41	227	181	7	6	10300	9.1

[1]M means metric thread and the digits are major diameter of thread and pitch.
HMV10 through HMV40 have a Metric ISO fine-thread profile.
HMV41 through HMV236 have a Metric ISO trapezoidal thread.

Continued on next page.

Continued from previous page.

Part Number	Thread[1][2] B	Dimensions					Piston Length of Travel	Piston Area	Assembly Weight
		C	D	E	E_1	A			
	mm	mm	mm	mm	mm	mm	mm	mm^2	kg.
HMV38	M 190X3	270	42	239	191	8	7	11500	10.8
HMV40	M 200X3	280	43	251	201	8	8	12500	11.4
HMV41	Tr 205X4	290	43	256	207	8	8	12900	12.2
HMV42	Tr 210X4	295	44	262	212	8	9	13500	12.5
HMV43	Tr 215X4	300	44	267	217	8	9	13800	13.0
HMV44	Tr 220X4	305	44	273	222	8	9	14400	13.4
HMV45	Tr 225X4	315	45	280	227	8	9	15200	14.6
HMV46	Tr 230X4	320	45	285	232	8	9	15600	14.8
HMV47	Tr 235X4	325	46	291	237	8	10	16200	16.0
HMV48	Tr 240X4	330	46	296	242	9	10	16500	16.3
HMV50	Tr 250X4	345	46	307	252	9	10	17800	17.6
HMV52	Tr 260X4	355	47	319	262	9	11	18800	19.0
HMV54	Tr 270X4	370	48	330	272	9	12	19700	20.4
HMV56	Tr 280X4	380	49	341	282	9	12	21100	22.0
HMV58	Tr 290X4	390	49	353	292	9	13	22600	22.5
HMV60	Tr 300X4	405	51	364	302	10	14	23600	25.6
HMV62	Tr 310X5	415	52	375	312	10	14	24900	27.0
HMV64	Tr 320X5	430	53	387	322	10	14	26300	29.6
HMV66	Tr 330X5	440	53	397	332	10	14	27000	31.0
HMV68	Tr 340X5	450	53	408	342	10	14	28400	32.5
HMV69	Tr 345X5	455	54	414	347	10	14	29400	33.6
HMV70	Tr 350X5	465	56	420	352	10	14	30000	35.0
HMV72	Tr 360X5	475	56	431	362	10	15	31300	37.0
HMV73	Tr 365X5	482	57	436	367	11	15	31700	38.5
HMV74	Tr 370X5	490	57	442	372	11	16	32800	39.2
HMV76	Tr 380X5	500	58	452	382	11	16	33600	41.0
HMV77	Tr 385X5	505	58	459	387	11	16	34700	42.0
HMV80	Tr 400X5	525	60	475	402	11	17	36700	46.0
HMV82	Tr 410X5	535	61	486	412	11	17	38300	48.2
HMV84	Tr 420X5	545	61	498	422	11	17	40000	50.4
HMV86	Tr 430X5	555	62	508	432	11	17	40800	53.0
HMV88	Tr 440X5	565	62	519	442	12	17	42500	55.0
HMV90	Tr 450X5	580	64	530	452	12	17	44100	58.2
HMV92	Tr 460X5	590	64	541	462	12	17	45000	61.0
HMV94	Tr 470X5	600	65	552	472	12	18	46900	63.7
HMV96	Tr 480X5	612	65	563	482	12	19	48500	65.0
HMV98	Tr 490X5	625	66	573	492	12	19	49800	69.0
HMV100	Tr 500X5	635	67	585	502	12	19	52000	71.5
HMV102	Tr 510X6	645	68	596	512	12	20	53300	75.0
HMV104	Tr 520X6	657	68	606	522	13	20	54200	77.0

[1]M means metric thread and the digits are major diameter of thread and pitch.
[2]Tr means 30°. Trapezoid thread and the digits are outside diameter of thread and pitch.
HMV10 through HMV40 have a Metric ISO fine-thread profile.
HMV41 through HMV236 have a Metric ISO trapezoidal thread.

Continued on next page.

METRIC HMV HYDRAULIC NUTS – *continued*

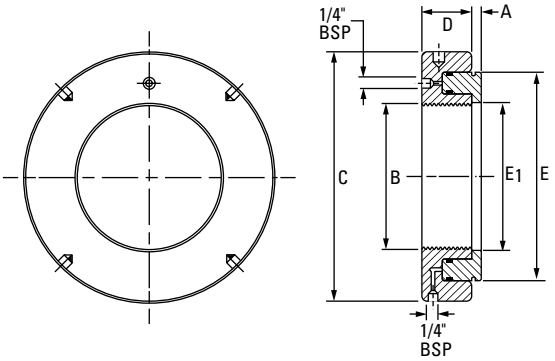

Continued from previous page.

Part Number	Thread[1] B	Dimensions					Piston Length of Travel	Piston Area	Assembly Weight
		C	D	E	E_1	A			
	mm	mm	mm	mm	mm	mm	mm	mm^2	kg.
HMV106	Tr 530X6	670	69	617	532	13	21	56200	80.0
HMV108	Tr 540X6	680	69	629	542	13	21	58200	83.0
HMV110	Tr 550X6	692	70	639	552	13	21	59200	86.0
HMV112	Tr 560X6	705	71	650	562	13	22	61200	90.0
HMV114	Tr 570X6	715	72	661	572	13	23	63200	93.0
HMV116	Tr 580X6	725	72	671	582	13	23	64200	96.0
HMV120	Tr 600X6	750	73	693	602	13	23	67400	100.0
HMV126	Tr 630X6	780	74	726	632	14	23	72900	110.0
HMV130	Tr 650X6	805	75	747	652	14	23	76200	116.0
HMV134	Tr 670X6	825	76	768	672	14	24	79500	123.0
HMV138	Tr 690X6	850	77	791	692	14	25	84200	130.0
HMV142	Tr 710X7	870	78	812	712	15	25	87700	137.0
HMV150	Tr 750X7	915	79	855	752	15	25	97000	150.0
HMV160	Tr 800X7	970	80	908	802	16	25	104000	173.0
HMV170	Tr 850X7	1020	83	962	852	16	26	114600	190.0
HMV180	Tr 900X7	1070	86	1015	902	17	30	124000	210.0
HMV190	Tr 950X8	1125	86	1069	952	17	30	135600	238.0
HMV200	Tr 1000X8	1180	88	1122	1002	17	34	145600	263.0
HMV212	Tr 1060X8	1255	95	1184	1063	18	34	161200	325.0
HMV216	Tr 1080X8	1280	100	1206	1083	18	34	167400	345.0
HMV224	Tr 1120X8	1340	106	1250	1123	19	36	178200	410.0
HMV236	Tr 1180X8	1420	115	1320	1183	22	40	189200	530.0

[1]Tr means 30°. Trapezoid thread and the digits are outside diameter of thread and pitch.
HMV10 through HMV40 have a Metric ISO fine-thread profile.
HMV41 through HMV236 have a Metric ISO trapezoidal thread.

METRIC LOCKNUTS

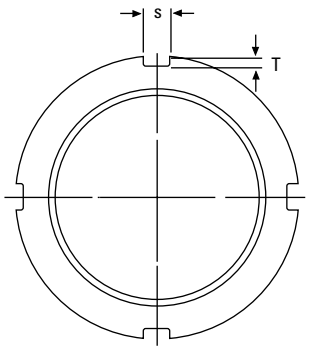

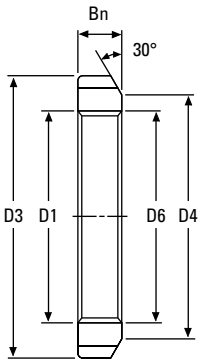

Locknut No.[1]	Thread[2] D_1	D_3	D_4	B_n	s	T	D_6	Weight	Lockwasher No.
	mm	mm	mm	mm	mm	mm	mm	kg	
KM0	M 10 X 0.75	18	13	4	3	2	10.5	0.01	MB00
KM1	M 12 X 1.0	22	17	4	3	2	12.5	0.01	MB01
KM2	M 15 X 1.0	25	21	5	4	2	15.5	0.01	MB02
KM3	M 17 X 1.0	28	24	5	4	2	17.5	0.01	MB03
KM4	M 20 X 1.0	32	26	6	4	2	20.5	0.02	MB04
KM5	M 25 X 1.5	38	32	7	5	2	25.8	0.03	MB05
KM6	M 30 X 1.5	45	38	7	5	2	30.8	0.04	MB06
KM7	M 35 X 1.5	52	44	8	5	2	35.8	0.05	MB07
KM8	M 40 X 1.5	58	50	9	6	2.5	40.8	0.09	MB08
KM9	M 45 X 1.5	65	56	10	6	2.5	45.8	0.12	MB09
KM10	M 50 X 1.5	70	61	11	6	2.5	50.8	0.15	MB10
KM11	M 55 X 2.0	75	67	11	7	3	56.0	0.16	MB11
KM12	M 60 X 2.0	80	73	11	7	3	61.0	0.17	MB12
KM13	M 65 X 2.0	85	79	12	7	3	66.0	0.20	MB13
KM14	M 70 X 2.0	92	85	12	8	3.5	71.0	0.24	MB14
KM15	M 75 X 2.0	98	90	13	8	3.5	76.0	0.29	MB15
KM16	M 80 X 2.0	105	95	15	8	3.5	81.0	0.40	MB16
KM17	M 85 X 2.0	110	102	16	8	3.5	86.0	0.45	MB17
KM18	M 90 X 2.0	120	108	16	10	4	91.0	0.56	MB18
KM19	M 95 X 2.0	125	113	17	10	4	96.0	0.66	MB19
KM20	M 100 X 2.0	130	120	18	10	4	101.0	0.70	MB20
KM21	M 105 X 2.0	140	126	18	12	5	106.0	0.85	MB21
KM22	M 110 X 2.0	145	133	19	12	5	111.0	0.97	MB22
KM23	M 115 X 2.0	150	137	19	12	5	116.0	1.01	MB23
KM24	M 120 X 2.0	160	148	21	12	5	126.0	1.80	MB24
KM25	M 125 X 2.0	160	148	21	12	5	126.0	1.19	MB25
KM26	M 130 X 2.0	165	149	21	12	5	131.0	1.25	MB26
KM27	M 135 X 2.0	175	160	22	14	6	136.0	1.55	MB27
KM28	M 140 X 2.0	180	160	22	14	6	141.0	1.56	MB28
KM29	M145 X 2.0	190	172	24	14	6	146.0	2.00	MB29

[1]No. KM0-KM40 also available in 304 stainless steel.
[2]M means metric thread and the digits are major diameter of thread and pitch.

Continued on next page.

METRIC LOCKNUTS – *continued*

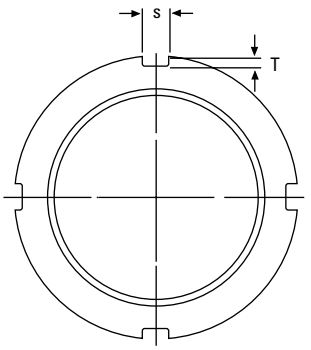

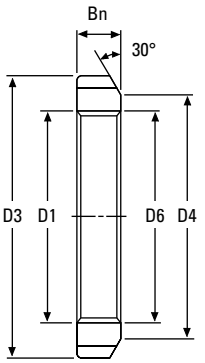

Continued from previous page.

Locknut No.[1]	Thread[2] D_1	D_3	D_4	B_n	s	T	D_6	Weight	Lockwasher No.
	mm	**mm**	**mm**	**mm**	**mm**	**mm**	**mm**	**kg**	
KM30	**M150 X 2.0**	**195**	**171**	**24**	**14**	**6**	**151.0**	**2.03**	MB30
KM31	**M155 X 3.0**	**200**	**182**	**25**	**16**	**7**	**156.5**	**2.21**	MB31
KM32	**M160 X 3.0**	**210**	**182**	**25**	**16**	**7**	**161.5**	**2.59**	MB32
KM33	**M165 X 3.0**	**210**	**193**	**26**	**16**	**7**	**166.5**	**2.43**	MB33
KM34	**M170 X 3.0**	**220**	**193**	**26**	**16**	**7**	**171.5**	**2.80**	MB34
KM36	**M180 X 3.0**	**230**	**203**	**27**	**18**	**8**	**181.5**	**3.07**	MB36
KM38	**M190 X 3.0**	**240**	**214**	**28**	**18**	**8**	**191.5**	**3.39**	MB38
KM40	**M200 X 3.0**	**250**	**226**	**29**	**18**	**8**	**201.5**	**3.69**	MB40

[1]No. KM0 - KM40 also available in 304 stainless steel.
[2]M means metric thread and the digits are major diameter of thread and pitch.

Locknut No.[1]	Thread[2] D_1	D_3	D_4	B_n	s	T	D_6	Weight	Lockwasher No.
	mm	**mm**	**mm**	**mm**	**mm**	**mm**	**mm**	**kg**	
KML24	**M120 x 2.0**	**145**	**133**	**20**	**12**	**5**	**121**	**0.78**	MBL24
KML26	**M130 x 2.0**	**155**	**143**	**21**	**12**	**5**	**131**	**0.88**	MBL26
KML28	**M140 x 2.0**	**165**	**151**	**22**	**14**	**6**	**141**	**0.99**	MBL28
KML30	**M150 x 2.0**	**180**	**164**	**24**	**14**	**6**	**151**	**1.38**	MBL30
KML32	**M160 x 3.0**	**190**	**174**	**25**	**16**	**7**	**161.5**	**1.56**	MBL32
KML34	**M170 x 3.0**	**200**	**184**	**26**	**16**	**7**	**171.5**	**1.72**	MBL34
KML36	**M180 x 3.0**	**210**	**192**	**27**	**18**	**8**	**181.5**	**1.95**	MBL36
KML38	**M190 x 3.0**	**220**	**202**	**28**	**18**	**8**	**191.5**	**2.08**	MBL38
KML40	**M200 x 3.0**	**240**	**218**	**29**	**18**	**8**	**201.5**	**2.98**	MBL40

[1]No. KML24 - KML40 also available in 304 stainless steel.
[2]M means metric thread and the digits are major diameter of thread and pitch.

Continued on next page.

METRIC LOCKNUTS – *continued*

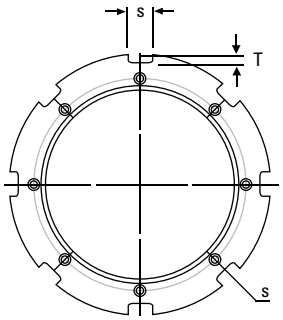

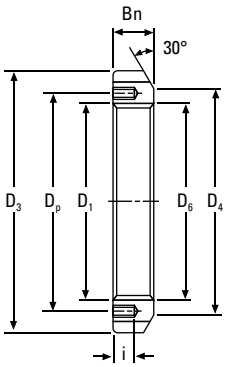

Continued from previous page.

Locknut No.	Thread[1] D_1	D_3	D_4	s	T	D_6	B_n	i	Tapped Hole Threads	D_p	Appropriate Lockplate No.	Weight
	mm	**mm**	**mm**	**mm**	**mm**	**mm**	**mm**	**mm**		**mm**		**kg**
HM3144	**Tr 220 x 4**	**280**	**250**	**20**	**10**	**222**	**32**	**15**	M 8 x 1.25	**238**	MS3144	**5.20**
HM3148	**Tr 240 x 4**	**300**	**270**	**20**	**10**	**242**	**34**	**15**	M 8 x 1.25	**258**	MS3148	**5.95**
HM3152	**Tr 260 x 4**	**330**	**300**	**24**	**12**	**262**	**36**	**18**	M 10 x 1.5	**281**	MS3152	**8.05**
HM3156	**Tr 280 x 4**	**350**	**320**	**24**	**12**	**282**	**38**	**18**	M 10 x 1.5	**301**	MS3156	**9.05**
HM3160	**Tr 300 x 4**	**380**	**340**	**24**	**12**	**302**	**40**	**18**	M 10 x 1.5	**326**	MS3160	**11.80**
HM3164	**Tr 320 x 5**	**400**	**360**	**24**	**12**	**322.5**	**42**	**18**	M 10 x 1.5	**345**	MS3164	**13.10**
HM3168	**Tr 340 x 5**	**440**	**400**	**28**	**15**	**342.5**	**55**	**21**	M 12 x 1.75	**372**	MS3168	**23.10**
HM3172	**Tr 360 x 5**	**460**	**420**	**28**	**15**	**362.5**	**58**	**21**	M 12 x 1.75	**392**	MS3172	**25.10**
HM3176	**Tr 380 x 5**	**490**	**450**	**32**	**18**	**382.5**	**60**	**21**	M 12 x 1.75	**414**	MS3176	**30.90**
HM3180	**Tr 400 x 5**	**520**	**470**	**32**	**18**	**402.5**	**62**	**27**	M 16 x 2	**439**	MS3180	**36.90**
HM3184	**Tr 420 x 5**	**540**	**490**	**32**	**18**	**422.5**	**70**	**27**	M 16 x 2	**459**	MS3184	**43.50**
HM3188	**Tr 440 x 5**	**560**	**510**	**36**	**20**	**442.5**	**70**	**27**	M 16 x 2	**477**	MS3188	**45.30**
HM3192	**Tr 460 x 5**	**580**	**540**	**36**	**20**	**462.5**	**75**	**27**	M 16 x 2	**497**	MS3192	**50.40**
HM3196	**Tr 480 x 5**	**620**	**560**	**36**	**20**	**482.5**	**75**	**27**	M 16 x 2	**527**	MS3196	**62.20**
HM31/500	**Tr 500 x 5**	**630**	**580**	**40**	**23**	**502.5**	**80**	**27**	M 16 x 2	**539**	MS31/500	**63.30**

[1]Tr means 30°; trapezoid thread and the digits are major diameter of thread and pitch.

Continued on next page.

METRIC LOCKNUTS – *continued*

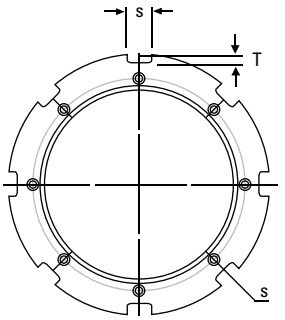

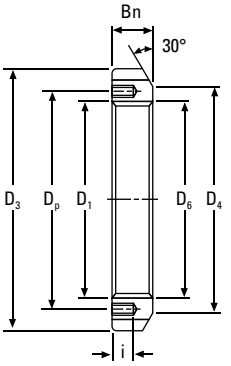

Continued from previous page.

Locknut No.	Thread[1] D_1	D_3	D_4	s	T	D_6	B_n	i	Tapped Hole Threads	D_p	Appropriate Lockplate No.	Weight
	mm	**mm**	**mm**	**mm**	**mm**	**mm**	**mm**	**mm**		**mm**		**kg**
HM3044	**Tr 220 x 4**	**260**	**242**	**20**	**9**	**222**	**30**	**12**	M 6 x 1	**229**	MS3044	**3.09**
HM3048	**Tr 240 x 4**	**290**	**270**	**20**	**10**	**242**	**34**	**15**	M 8 x 1.25	**253**	MS3048	**5.16**
HM3052	**Tr 260 x 4**	**310**	**290**	**20**	**10**	**262**	**34**	**15**	M 8 x 1.25	**273**	MS3052	**5.67**
HM3056	**Tr 280 x 4**	**330**	**310**	**24**	**10**	**282**	**38**	**15**	M 8 x 1.25	**293**	MS3056	**6.78**
HM3060	**Tr 300 x 4**	**360**	**336**	**24**	**12**	**302**	**42**	**15**	M 8 x 1.25	**316**	MS3060	**9.62**
HM3064	**Tr 320 x 5**	**380**	**356**	**24**	**12**	**322.5**	**42**	**15**	M 8 x 1.25	**335**	MS3064	**9.94**
HM3068	**Tr 340 x 5**	**400**	**376**	**24**	**12**	**342.5**	**45**	**15**	M 8 x 1.25	**355**	MS3068	**11.70**
HM3072	**Tr 360 x 5**	**420**	**394**	**28**	**13**	**362.5**	**45**	**15**	M 8 x 1.25	**374**	MS3072	**12.00**
HM3076	**Tr 380 x 5**	**450**	**422**	**28**	**14**	**382.5**	**48**	**18**	M 10 x 1.5	**398**	MS3076	**14.90**
HM3080	**Tr 400 x 5**	**470**	**442**	**28**	**14**	**402.5**	**52**	**18**	M 10 x 1.5	**418**	MS3080	**16.90**
HM3084	**Tr 420 x 5**	**490**	**462**	**32**	**14**	**422.5**	**52**	**18**	M 10 x 1.5	**438**	MS3084	**17.40**
HM3088	**Tr 440 x 5**	**520**	**490**	**32**	**15**	**442.5**	**60**	**21**	M 12 x 1.75	**462**	MS3088	**26.20**
HM3092	**Tr 460 x 5**	**540**	**510**	**32**	**15**	**462.5**	**60**	**21**	M 12 x 1.75	**482**	MS3092	**29.60**
HM3096	**Tr 480 x 5**	**560**	**530**	**36**	**15**	**482.5**	**60**	**21**	M 12 x 1.75	**502**	MS3096	**28.30**
HM30/500	**Tr 500 x 5**	**580**	**550**	**36**	**15**	**502.5**	**68**	**21**	M 12 x 1.75	**522**	MS30/500	**33.60**

[1]Tr means 30°; trapezoid thread and the digits are major diameter of thread and pitch.

Continued on next page.

METRIC LOCKNUTS – *continued*

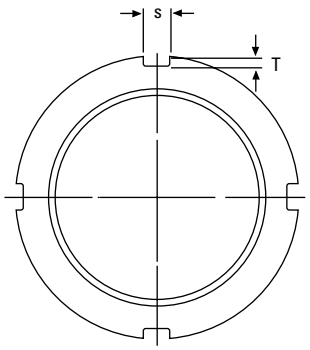

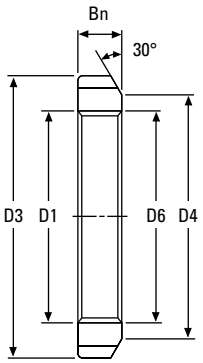

Continued from previous page.

Locknut No.	Thread[1] D_1	D_3	D_4	B_n	s	T	D_6	Weight
	mm	**mm**	**mm**	**mm**	**mm**	**mm**	**mm**	**kg**
HM42	**Tr 210 x 4**	**270**	**238**	**30**	**20**	**10**	**212**	**4.75**
HM44	**Tr 220 x 4**	**280**	**250**	**32**	**20**	**10**	**222**	**5.35**
HM46	**Tr 230 x 4**	**290**	**260**	**34**	**20**	**10**	**232**	**5.80**
HM48	**Tr 240 x 4**	**300**	**270**	**34**	**20**	**10**	**242**	**6.20**
HM50	**Tr 250 x 4**	**320**	**290**	**36**	**20**	**10**	**252**	**7.00**
HM52	**Tr 260 x 4**	**330**	**300**	**36**	**24**	**12**	**262**	**8.55**
HM54	**Tr 270 x 4**	**340**	**310**	**38**	**24**	**12**	**272**	**9.20**
HM56	**Tr 280 x 4**	**350**	**320**	**38**	**24**	**12**	**282**	**10.00**
HM58	**Tr 290 x 4**	**370**	**330**	**40**	**24**	**12**	**292**	**11.80**
HM60	**Tr 300 x 4**	**380**	**340**	**40**	**24**	**12**	**302**	**12.00**
HM62	**Tr 310 x 5**	**390**	**350**	**42**	**24**	**12**	**312.5**	**13.40**
HM64	**Tr 320 x 5**	**400**	**360**	**42**	**24**	**12**	**322.5**	**13.50**
HM66	**Tr 330 x 5**	**420**	**380**	**52**	**28**	**15**	**332.5**	**20.40**
HM68	**Tr 340 x 5**	**440**	**400**	**55**	**28**	**15**	**342.5**	**24.50**
HM70	**Tr 350 x 5**	**450**	**410**	**55**	**28**	**15**	**352.5**	**25.20**
HM72	**Tr 360 x 5**	**460**	**420**	**58**	**28**	**15**	**362.5**	**27.50**
HM74	**Tr 370 x 5**	**470**	**430**	**58**	**28**	**15**	**372.5**	**28.20**
HM76	**Tr 380 x 5**	**490**	**450**	**60**	**32**	**18**	**382.5**	**33.50**
HM80	**Tr 400 x 5**	**520**	**470**	**62**	**32**	**18**	**402.5**	**40.00**
HM84	**Tr 420 x 5**	**540**	**490**	**70**	**32**	**18**	**422.5**	**46.90**
HM88	**Tr 440 x 5**	**560**	**510**	**70**	**36**	**20**	**442.5**	**48.50**
HM92	**Tr 460 x 5**	**580**	**540**	**75**	**36**	**20**	**462.5**	**55.00**
HM96	**Tr 480 x 5**	**620**	**560**	**75**	**36**	**20**	**482.5**	**67.00**
HM100	**Tr 500 x 5**	**630**	**590**	**80**	**40**	**23**	**502.5**	**69.00**
HM102	**Tr 510 x 6**	**650**	**590**	**80**	**40**	**23**	**513**	**75.00**
HM106	**Tr 530 x 6**	**670**	**610**	**80**	**40**	**23**	**533**	**78.00**
HM110	**Tr 550 x 6**	**700**	**640**	**80**	**40**	**23**	**553**	**92.50**

[1]Tr means 30°; trapezoid thread and the digits are major diameter of thread and pitch.

Continued on next page.

METRIC LOCKNUTS – *continued*

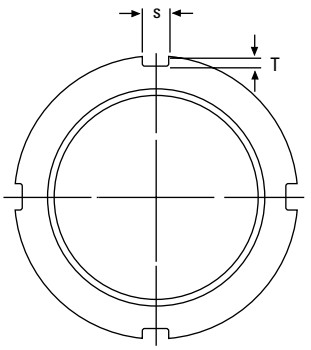

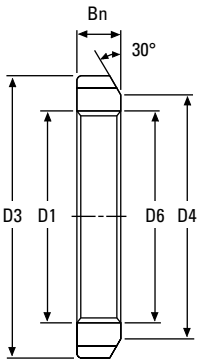

Continued from previous page.

Locknut No.	Thread[1] D_1	D_3	D_4	B_n	s	T	D_6	Weight
	mm	**mm**	**mm**	**mm**	**mm**	**mm**	**mm**	**kg**
HML41	**Tr 205 x 4**	**250**	**232**	**30**	**18**	**8**	**207**	**3.43**
HML43	**Tr 215 x 4**	**260**	**242**	**30**	**20**	**9**	**217**	**3.72**
HML47	**Tr 235 x 4**	**280**	**262**	**34**	**20**	**9**	**237**	**4.60**
HML52	**Tr 260 x 4**	**310**	**290**	**34**	**20**	**10**	**262**	**5.80**
HML56	**Tr 280 x 4**	**330**	**310**	**38**	**24**	**10**	**282**	**6.72**
HML60	**Tr 300 x 4**	**360**	**336**	**42**	**24**	**12**	**302**	**9.60**
HML64	**Tr 320 x 5**	**380**	**356**	**42**	**24**	**12**	**322.5**	**10.30**
HML69	**Tr 345 x 5**	**410**	**384**	**45**	**28**	**13**	**347.5**	**11.50**
HML72	**Tr 360 x 5**	**420**	**394**	**45**	**28**	**13**	**362.5**	**12.10**
HML73	**Tr 365 x 5**	**430**	**404**	**48**	**28**	**13**	**367.5**	**14.20**
HML76	**Tr 380 x 5**	**450**	**422**	**48**	**28**	**14**	**382.5**	**16.00**
HML77	**Tr 385 x 5**	**450**	**422**	**48**	**28**	**14**	**387.5**	**15.00**
HML80	**Tr 400 x 5**	**470**	**442**	**52**	**28**	**14**	**402.5**	**18.50**
HML82	**Tr 410 x 5**	**480**	**452**	**52**	**32**	**14**	**412.5**	**19.00**
HML84	**Tr 420 x 5**	**490**	**462**	**52**	**32**	**14**	**422.5**	**19.40**
HML86	**Tr 430 x 5**	**500**	**472**	**52**	**32**	**14**	**432.5**	**19.80**
HML88	**Tr 440 x 5**	**520**	**490**	**60**	**32**	**15**	**442.5**	**27.00**
HML90	**Tr 450 x 5**	**520**	**490**	**60**	**32**	**15**	**452.5**	**23.80**
HML92	**Tr 460 x 5**	**540**	**510**	**60**	**32**	**15**	**462.5**	**28.00**
HML94	**Tr 470 x 5**	**540**	**510**	**60**	**32**	**15**	**472.5**	**25.00**
HML96	**Tr 480 x 5**	**560**	**530**	**60**	**36**	**15**	**482.5**	**29.50**
HML98	**Tr 490 x 5**	**580**	**550**	**60**	**36**	**15**	**492.5**	**34.00**
HML100	**Tr 500 x 5**	**580**	**550**	**68**	**36**	**15**	**502.5**	**35.00**
HML104	**Tr 520 x 6**	**600**	**570**	**68**	**36**	**15**	**523**	**37.00**
HML106	**Tr 530 x 6**	**630**	**590**	**68**	**40**	**20**	**533**	**47.00**
HML108	**Tr 540 x 6**	**630**	**590**	**68**	**40**	**20**	**543**	**43.50**

[1]Tr means 30°; trapezoid thread and the digits are major diameter of thread and pitch.

METRIC LOCKWASHERS

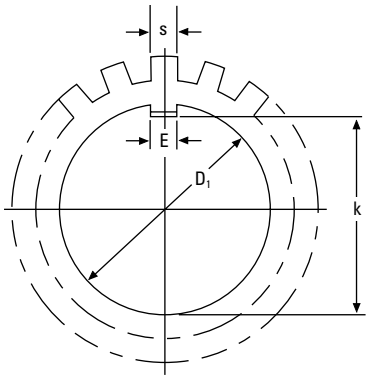

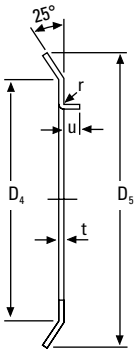

Lockwasher[1] No.	Thread D_1	k	E	t	S	D_4	D_5	r[2]	u[2]	Number of Tangs	Weight per 100 pieces	Locknut No.
	mm	mm	mm	mm	mm	mm	mm	mm	mm		kg	
MB0	10	8.5	3	1	3	13	21	0.5	2	9	0.13	KM00
MB1	12	10.5	3	1	3	17	25	0.5	2	9	0.19	KM01
MB2	15	13.5	4	1	4	21	28	1	2.5	13	0.25	KM02
MB3	17	15.5	4	1	4	24	32	1	2.5	13	0.31	KM03
MB4	20	18.5	4	1	4	26	36	1	2.5	13	0.35	KM04
MB5	25	23	5	1.2	5	32	42	1	2.5	13	0.64	KM05
MB6	30	27.5	5	1.2	5	38	49	1	2.5	13	0.78	KM06
MB7	35	32.5	6	1.2	5	44	57	1	2.5	15	1.04	KM07
MB8	40	37.5	6	1.2	6	50	62	1	2.5	15	1.23	KM08
MB9	45	42.5	6	1.2	6	56	69	1	2.5	17	1.52	KM09
MB10	50	47.5	6	1.2	6	61	74	1	2.5	17	1.60	KM10
MB11	55	52.5	8	1.2	7	67	81	1	4	17	1.96	KM11
MB12	60	57.5	8	1.5	7	73	86	1.2	4	17	2.53	KM12
MB13	65	62.5	8	1.5	7	79	92	1.2	4	19	2.90	KM13
MB14	70	66.5	8	1.5	8	85	98	1.2	4	19	3.34	KM14
MB15	75	71.5	8	1.5	8	90	104	1.2	4	19	3.56	KM15
MB16	80	76.5	10	1.8	8	95	112	1.2	4	19	4.64	KM16
MB17	85	81.5	10	1.8	8	102	119	1.2	4	19	5.24	KM17
MB18	90	86.5	10	1.8	10	108	126	1.2	4	19	6.23	KM18
MB19	95	91.5	10	1.8	10	113	133	1.2	4	19	6.70	KM19
MB20	100	96.5	12	1.8	10	120	142	1.2	6	19	7.65	KM20
MB21	105	100.5	12	1.8	12	126	145	1.2	6	19	8.26	KM21
MB22	110	105.5	12	1.8	12	133	154	1.2	6	19	9.40	KM22
MB23	115	110.5	12	2	12	137	159	1.5	6	19	10.80	KM23
MB24	120	115	14	2	12	138	164	1.5	6	19	10.50	KM24
MB25	125	120	14	2	12	148	170	1.5	6	19	11.80	KM25
MB26	130	125	14	2	12	149	175	1.5	6	19	11.30	KM26
MB27	135	130	14	2	14	160	185	1.5	6	19	14.40	KM27
MB28	140	135	16	2	14	160	192	1.5	8	19	14.20	KM28
MB29	145	140	16	2	14	171	202	1.5	8	19	16.80	KM29

[1]No. MB0-MB40 also available in 304 stainless steel.
[2]Straight tangs when t ≥ 3 mm.

Continued on next page.

METRIC LOCKWASHERS – *continued*

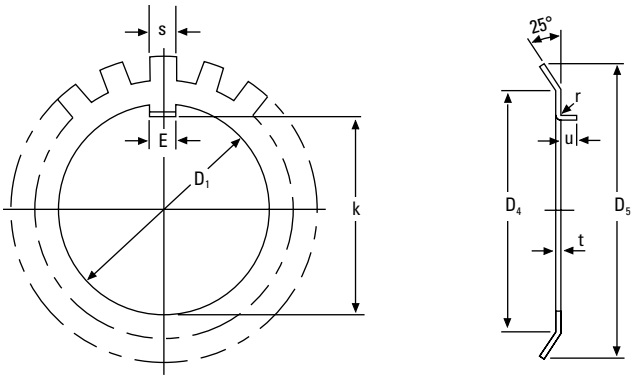

Continued from previous page.

Lockwasher[1] No.	Thread D_1	k	E	t	S	D_4	D_5	r[2]	u[2]	Number of Tangs	Weight per 100 pieces	Locknut No.
	mm	mm	mm	mm	mm	mm	mm	mm	mm		kg	
MB30	**150**	**145**	**16**	**2**	**14**	**171**	**205**	**1.5**	**8**	19	**15.50**	KM30
MB31	**155**	**147.5**	**16**	**2.5**	**16**	**182**	**212**	**1.5**	**8**	19	**20.90**	KM31
MB32	**160**	**154**	**18**	**2.5**	**18**	**182**	**217**	**1.5**	**8**	19	**22.20**	KM32
MB33	**165**	**157.5**	**18**	**2.5**	**16**	**193**	**222**	**1.5**	**8**	19	**24.10**	KM33
MB34	**170**	**164**	**18**	**2.5**	**16**	**193**	**232**	**1.5**	**8**	19	**24.70**	KM34
MB36	**180**	**174**	**20**	**2.5**	**18**	**203**	**242**	**1.5**	**8**	19	**26.80**	KM36
MB38	**190**	**184**	**20**	**2.5**	**18**	**214**	**252**	**1.5**	**8**	19	**27.80**	KM38
MB40	**200**	**194**	**20**	**2.5**	**18**	**226**	**262**	**1.5**	**8**	19	**29.30**	KM40
MB44	**220**	**213**	**24**	**3.0**	**20**	**250**	**292**	–	–	19	**48.30**	HM3144
MB48	**240**	**233**	**24**	**3.0**	**20**	**270**	**312**	–	–	19	**50.20**	HM3148
MB52	**260**	**253**	**28**	**3.0**	**24**	**300**	**342**	–	–	23	**72.90**	HM3152
MB56	**280**	**273**	**28**	**3.0**	**24**	**320**	**362**	–	–	23	**75.90**	HM3156

[1]No. MB0-MB40 also available in 304 stainless steel.
[2]Straight tangs when t ≥ 3 mm.

Lockwasher[1] No.	Thread D_1	k	E	t	S	D_4	D_5	r	u	Number of Tangs	Weight per 100 pieces	Locknut No.
	mm	mm	mm	mm	mm	mm	mm	mm	mm		kg	
MBL24	**120**	**115**	**14**	**2**	**12**	**133**	**155**	**1.5**	**6**	19	**7.70**	KML24
MBL26	**130**	**125**	**14**	**2**	**12**	**143**	**165**	**1.5**	**6**	19	**8.70**	KML26
MBL28	**140**	**135**	**16**	**2**	**14**	**151**	**175**	**1.5**	**8**	19	**10.90**	KML28
MBL30	**150**	**145**	**16**	**2**	**14**	**164**	**190**	**1.5**	**8**	19	**11.30**	KML30
MBL32	**160**	**154**	**18**	**2.5**	**16**	**174**	**200**	**1.5**	**8**	19	**16.20**	KML32
MBL34	**170**	**164**	**18**	**2.5**	**16**	**184**	**210**	**1.5**	**8**	19	**19.00**	KML34
MBL36	**180**	**174**	**20**	**2.5**	**18**	**192**	**220**	**1.5**	**8**	19	**18.00**	KML36
MBL38	**190**	**184**	**20**	**2.5**	**18**	**202**	**230**	**1.5**	**8**	19	**20.50**	KML38
MBL40	**200**	**194**	**20**	**2.5**	**18**	**218**	**240**	**1.5**	**8**	19	**21.40**	KML40

[1]No. MBL24-MBL40 also available in 304 stainless steel.

METRIC LOCKPLATES

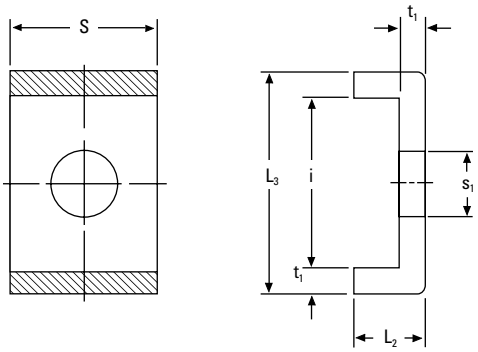

Lockplate No.	t_1	S	L_2	S_1	i	L_3	Appropriate Locknut No.	Weight per 100 pieces
	mm	mm	mm	mm	mm	mm		kg
MS3144	4	20	12	9	22.5	30.5	HM3144	2.60
MS3148	4	20	12	9	22.5	30.5	HM3148	2.60
MS3152	4	24	12	12	25.5	33.5	HM3152	3.39
MS3156	4	24	12	12	25.5	33.5	HM3156	3.39
MS3160	4	24	12	12	30.5	38.5	HM3160	3.79
MS3164	5	24	15	12	31	41	HM3164	5.35
MS3168	5	28	15	14	38	48	HM3168	6.65
MS3172	5	28	15	14	38	48	HM3172	6.65
MS3176	5	32	15	14	40	50	HM3176	7.96
MS3180	5	32	15	18	45	55	HM3180	8.20
MS3184	5	32	15	18	45	55	HM3184	8.20
MS3188	5	36	15	18	43	53	HM3188	9.00
MS3192	5	36	15	18	43	53	HM3192	9.00
MS3196	5	36	15	18	53	63	HM3196	10.40
MS31/500	5	40	15	18	45	55	HM31/500	10.50
MS3044	4	20	12	7	13.5	21.5	HM3044	2.12
MS3048	4	20	12	9	17.5	25.5	HM3048	2.29
MS3052	4	20	12	9	17.5	25.5	HM3052	2.29
MS3056	4	24	12	9	17.5	25.5	HM3056	2.92
MS3060	4	24	12	9	20.5	28.5	HM3060	3.16
MS3064	5	24	15	9	21	31	HM3064	4.56
MS3068	5	24	15	9	21	31	HM3068	4.56
MS3072	5	28	15	9	20	30	HM3072	5.03
MS3076	5	28	15	12	24	34	HM3076	5.28
MS3080	5	28	15	12	24	34	HM3080	5.28
MS3084	5	32	15	12	24	34	HM3084	6.11
MS3088	5	32	15	14	28	38	HM3088	6.45
MS3092	5	32	15	14	28	38	HM3092	6.45
MS3096	5	36	15	14	28	38	HM3096	7.29
MS30/500	5	36	15	14	28	38	HM30/500	7.29

INCH ACCESSORIES – PULL-TYPE SLEEVES

SNW/SNP – PULL-TYPE SLEEVE, LOCKNUT, LOCKWASHER/LOCKPLATE ASSEMBLIES

- The table below shows dimensions for adapter assemblies and components used in the mounting of tapered bore bearings on shafts.
- SNW assembly consists of a sleeve, locknut and lockwasher.
- SNP assembly consists of a sleeve, locknut and lockplate.

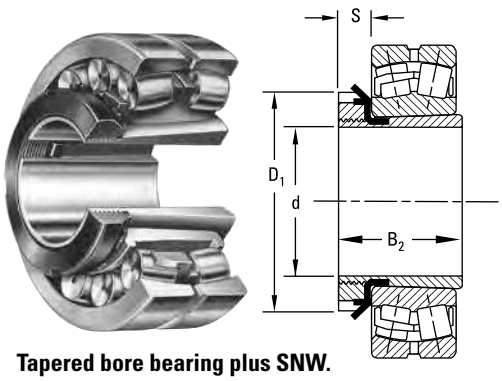

Tapered bore bearing plus SNW.

Bearing Number[1]	Accessory Numbers				Shaft Dimensions		Adapter Dimensions			SNW/SNP Assembly Weight
	Assembly	Sleeve	Locknut	Lockwasher Lockplate	Diameter d	Tolerance[2]	B_2	S	D_1	
					in.	in.	in.	in.	in.	lbs.
SERIES 222K										
22207K	**SNW-07 x 1 3/16**	**S-07**	**N-07**	**W-07**	**1 3/16**	**-0.003**	**1 29/64**	**29/64**	**2 1/16**	**0.32**
22208K	**SNW-08 x 1 5/16**	**S-08**	**N-08**	**W-08**	**1 5/16**	**-0.003**	**1 21/32**	**29/64**	**2 1/4**	**0.42**
	SNW-09 x 1 3/8	S-09 x 1 3/8			1 3/8					
22209K	**SNW-09 x 1 7/16**	**S-09**	**N-09**	**W-09**	**1 7/16**	**-0.003**	**1 37/64**	**1/2**	**2 17/32**	**0.6**
	SNW-09 x 1 1/2	S-09 x 1 1/2			1 1/2					
	SNW-10 x 1 5/8	S-10 x 1 5/8			1 5/8					
22210K	**SNW-10 x 1 11/16**	**S-10**	**N-10**	**W-10**	**1 11/16**	**-0.003**	**1 49/64**	**9/16**	**2 11/16**	**0.7**
	SNW-10 x 1 3/4	S-10 x 1 3/4			1 3/4					
	SNW-11 x 1 7/8	S-11 x 1 7/8			1 7/8					
22211K	**SNW-11 x 1 15/16**	**S-11**	**N-11**	**W-11**	**1 15/16**	**-0.003**	**1 27/32**	**9/16**	**2 31/32**	**0.8**
	SNW-11 x 2	S-11 x 2			2					
22212K	**SNW-12 x 2 1/16**	**S-12**	**N-12**	**W-12**	**2 1/16**	**-0.004**	**1 63/64**	**19/32**	**3 5/32**	**1.1**
	SNW-13 x 2 1/8	S-13 x 2 1/8			2 1/8					
22213K	**SNW-13 x 2 3/16**	**S-13**	**N-13**	**W-13**	**2 3/16**	**-0.004**	**2 3/32**	**5/8**	**3 3/8**	**1.4**
	SNW-13 x 2 1/4	S-13 x 2 1/4			2 1/4					
22214K	**SNW-14 x 2 5/16**	**S-14**	**N-14**	**W-14**	**2 5/16**	**-0.004**	**2 11/64**	**5/8**	**3 5/8**	**1.8**
	SNW-15 x 2 3/8	S-15 x 2 3/8			2 3/8					
22215K	**SNW-15 x 2 7/16**	**S-15**	**AN-15**	**W-15**	**2 7/16**	**-0.004**	**2 19/64**	**43/64**	**3 7/8**	**2**
	SNW-15 x 2 1/2	S-15 x 2 1/2			2 1/2					
	SNW-16 x 2 5/8	S-16 x 2 5/8			2 5/8					
22216K	**SNW-16 x 2 11/16**	**S-16**	**AN-16**	**W-16**	**2 11/16**	**-0.004**	**2 3/8**	**43/64**	**4 5/32**	**2.4**
	SNW-16 x 2 3/4	S-16 x 2 3/4			2 3/4					
	SNW-17 x 2 13/16	S-17 x 2 13/16			2 13/16					
	SNW-17 x 2 7/8	S-17 x 2 7/8			2 7/8					
22217K	**SNW-17 x 2 15/16**	**S-17**	**AN-17**	**W-17**	**2 15/16**	**-0.004**	**2 31/64**	**45/64**	**4 13/32**	**3.0**
	SNW-17 x 3	S-17 x 3			3					
	SNW-18 x 3 1/16	S-18 x 3 1/16			3 1/16					
	SNW-18 x 3 1/8	S-18 x 3 1/8			3 1/8					
22218K	**SNW-18 x 3 3/16**	**S-18**	**AN-18**	**W-18**	**3 3/16**	**-0.004**	**2 41/64**	**25/32**	**4 21/32**	**3.0**
	SNW-18 x 3 1/4	S-18 x 3 1/4			3 1/4					
22219K	**SNW-19 x 3 5/16**	**S-19**	**AN-19**	**W-19**	**3 5/16**	**-0.004**	**2 49/64**	**13/16**	**4 15/16**	**3.3**
	SNW-20 x 3 3/8	S-20 x 3 3/8			3 3/8					
22220K	**SNW-20 x 3 7/16**	**S-20**	**AN-20**	**W-20**	**3 7/16**	**-0.004**	**2 7/8**	**27/32**	**5 3/16**	**4.4**
	SNW-20 x 3 1/2	S-20 x 3 1/2			3 1/2					
	SNW-22 x 3 13/16	S-22 x 3 13/16			3 13/16					
	SNW-22 x 3 7/8	S-22 x 3 7/8			3 7/8					
22222K	**SNW-22 x 3 15/16**	**S-22**	**AN-22**	**W-22**	**3 15/16**	**-0.004**	**3 13/64**	**29/32**	**5 23/32**	**5.0**
	SNW-22 x 4	S-22 x 4			4					

[1]Bold shaft sizes are standard. When ordering non-standard accessories, specify shaft size.
[2]Tolerance range is from +0 to value listed.

Continued on next page.

INCH ACCESSORIES – PULL-TYPE SLEEVES – *continued*

SNW/SNP – PULL-TYPE SLEEVE, LOCKNUT, LOCKWASHER/LOCKPLATE ASSEMBLIES

- The table below shows dimensions for adapter assemblies and components used in the mounting of tapered bore bearings on shafts.
- SNW assembly consists of a sleeve, locknut and lockwasher.
- SNP assembly consists of a sleeve, locknut and lockplate.

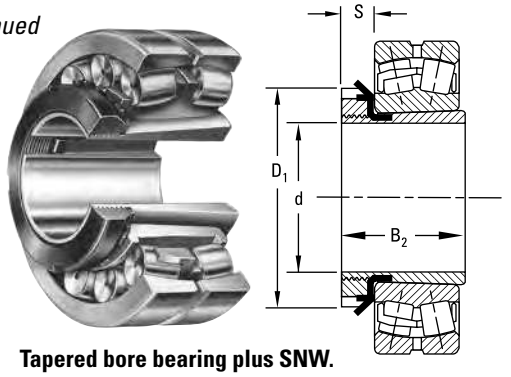

Tapered bore bearing plus SNW.

Continued from previous page.

Bearing Number[1]	Accessory Numbers				Shaft Dimensions		Adapter Dimensions			SNW/SNP Assembly Weight
	Assembly	Sleeve	Locknut	Lockwasher Lockplate	Diameter d	Tolerance[2]	B_2	S	D_1	
					in.	in.	in.	in.	in.	lbs.
	SNW-24 x 4 1/16	S-24 x 4 1/16			4 1/16					
	SNW-24 x 4 1/8	S-24 x 4 1/8			4 1/8					
22224K	**SNW-24 x 4 3/16**	**S-24**	**AN-24**	**W-24**	**4 3/16**	**-0.005**	**3 15/32**	**15/16**	**6 1/8**	**6.7**
	SNW-24 x 4 1/4	S-24 x 4 1/4			4 1/4					
	SNW-26 x 4 5/16	S-26 x 4 5/16			4 5/16					
	SNW-26 x 4 3/8	S-26 x 4 3/8			4 3/8					
22226K	**SNW-26 x 4 7/16**	**S-26**	**AN-26**	**W-26**	**4 7/16**	**-0.005**	**3 49/64**	**1**	**6 3/4**	**8.6**
	SNW-26 x 4 1/2	S-26 x 4 1/2			4 1/2					
	SNW-28 x 4 13/16	S-28 x 4 13/16			4 13/16					
	SNW-28 x 4 7/8	S-28 x4 7/8			4 7/8					
22228K	**SNW-28 x 4 15/16**	**S-28**	**AN-28**	**W-28**	**4 15/16**	**-0.005**	**3 63/64**	**1 1/16**	**7 3/32**	**10.3**
	SNW-28 x 5	S-28 x 5			5					
	SNW-30 x 5 1/8	S-30 x 5 1/8			5 1/8					
22230K	**SNW-30 x 5 3/16**	**S-30**	**AN-30**	**W-30**	**5 3/16**	**-0.005**	**4 15/64**	**1 1/8**	**7 11/16**	**13.5**
	SNW-30 x 5 1/4	S-30 x 5 1/4			5 1/4					
	SNW-32 x 5 3/8	S-30 x 5 3/8			5 3/8					
22232K	**SNW-32 x 5 7/16**	**S-32**	**AN-32**	**W-32**	**5 7/16**	**-0.005**	**4 37/64**	**1 3/16**	**8 1/16**	**15.6**
	SNW-32 x 5 1/2	S-32 x 5 1/2			5 1/2					
	SNW-34 x 5 13/16	S-34 x 5 13/16			5 13/16					
	SNW-34 x 5 7/8	S-34 x 5 7/8			5 7/8					
22234K	**SNW-34 x 5 15/16**	**S-34**	**AN-34**	**W-34**	**5 15/16**	**-0.005**	**4 27/32**	**1 7/32**	**8 21/32**	**19.4**
	SNW-34 x 6	S-34 x 6			6					
	SNW-36 x 6 5/16	S-36 x 6 5/16			6 5/16					
	SNW-36 x 6 3/8	S-36 x 6 3/8			6 3/8					
22236K	**SNW-36 x 6 7/16**	**S-36**	**AN-36**	**W-36**	**6 7/16**	**-0.005**	**5 1/32**	**1 1/4**	**9 1/16**	**20.5**
	SNW-36 x 6 1/2	S-36 x 6 1/2			6 1/2					
	SNW-38 x 6 13/16	S-38 x 6 13/16			6 13/16					
	SNW-38 x 6 7/8	S-38 x 6 7/8			6 7/8					
22238K	**SNW-38 x 6 15/16**	**S-38**	**AN-38**	**W-38**	**6 15/16**	**-0.005**	**5 17/64**	**1 9/32**	**9 15/32**	**23.4**
	SNW-38 x 7	S-38 x 7			7					
	SNW-40 x 7 1/8	S-40 x 7 1/8			7 1/8					
22240K	**SNW-40 x 7 3/16**	**S-40**	**AN-40**	**W-40**	**7 3/16**	**-0.005**	**5 31/64**	**1 11/32**	**9 27/32**	**30.5**
	SNW-40 x 7 1/4	S-40 x 7 1/4			7 1/4					
	SNW-44 x 7 13/16	S-44 x 7 13/16			7 13/16					
	SNW-44 x 7 7/8	S-44 x 7 7/8			7 7/8					
22244K	**SNW-44 x 7 15/16**	**S-44**	**N-044**	**W-44**	**7 15/16**	**-0.005**	**5 29/32**	**1 3/8**	**11**	**33.0**
	SNW-44 x 8	S-44 x 8			8					
22248K	**SNP-48 x 8 7/16**	**S-48**	**N-048**	**P-48**	**8 7/16**	**-0.006**	**6 5/8**	**1 23/64**	**11 7/16**	**37.5**
	SNP-48 x 8 15/16	S-48 x 8 15/16			8 15/16					
22252K	**SNP-52 x 9 7/16**	**S-52**	**N-052**	**P-52**	**9 7/16**	**-0.006**	**7 37/64**	**1 27/64**	**12 3/16**	**44.0**

[1]Bold shaft sizes are standard. When ordering non-standard accessories, specify shaft size.
[2]Tolerance range is from +0 to value listed.

Continued on next page.

Continued from previous page.

Bearing Number[1]	Accessory Numbers				Shaft Dimensions		Adapter Dimensions			SNW/SNP Assembly Weight
	Assembly	Sleeve	Locknut	Lockwasher Lockplate	Diameter d	Tolerance[2]	B_2	S	D_1	
					in.	in.	in.	in.	in.	lbs.
SERIES 230K										
	SNW-3024 x 4 1/16	S-3024 x 4 1/16			4 1/16					
	SNW-3024 x 4 1/8	S-3024 x 4 1/8			4 1/8					
23024K	**SNW-3024 x 4 3/16**	**S-3024**	**N-024**	**W-024**	**4 3/16**	**-0.005**	**2 61/64**	**13/16**	**5 11/16**	**6.1**
	SNW-3024 x 4 1/4	S-3024 x 4 1/4			4 1/4					
	SNW-3026 x 4 5/16	S-3024 x 4 5/16			4 5/16					
	SNW-3026 x 4 3/8	S-3024 x 4 3/8			4 3/8					
23026K	**SNW-3026 x 4 7/16**	**S-3026**	**N-026**	**W-026**	**4 7/16**	**-0.005**	**3 15/64**	**7/8**	**6 1/8**	**7.5**
	SNW-3026 x 4 1/2	S-3026 x 4 1/2			4 1/2					
	SNW-3028 x 4 13/16	S-3028 x 4 13/16			4 13/16					
	SNW-3028 x 4 7/8	S-3028 x 4 7/8			4 7/8					
23028K	**SNW-3028 x 4 15/16**	**S-3028**	**N-028**	**W-028**	**4 15/16**	**-0.005**	**3 11/32**	**15/16**	**6 1/2**	**8.4**
	SNW-3030 x 5 1/8	S-3030 x 5 1/8			5 1/8					
23030K	**SNW-3030 x 5 3/16**	**S-3030**	**N-030**	**W-030**	**5 3/16**	**-0.005**	**3 31/64**	**31/32**	**7 1/8**	**9.8**
	SNW-3030 x 5 1/4	S-3030 x 5 1/4			5 1/4					
	SNW-3032 x 5 3/8	S-3032 x 5 3/8			5 3/8					
23032K	**SNW-3032 x 5 7/16**	**S-3032**	**N-032**	**W-032**	**5 7/16**	**-0.005**	**3 23/32**	**1 1/32**	**7 1/2**	**11.8**
	SNW-3032 x 5 1/2	S-3032 x 5 1/2			5 1/2					
	SNW-3034 x 5 13/16	S-3034 x 5 13/16			5 13/16					
	SNW-3034 x 5 7/8	S-3034 x 5 7/8			5 7/8					
23034K	**SNW-3034 x 5 15/16**	**S-3034**	**N-034**	**W-034**	**5 15/16**	**-0.005**	**4 1/64**	**1 1/16**	**7 7/8**	**13.3**
	SNW-3034 x 6	S-3034 x 6			6					
	SNW-3036 x 6 5/16	S-3036 x 6 5/16			6 5/16					
	SNW-3036 x 6 3/8	S-3036 x 6 3/8			6 3/8					
23036K	**SNW-3036 x 6 7/16**	**S-3036**	**N-036**	**W-036**	**6 7/16**	**-0.005**	**4 11/32**	**1 3/32**	**8 1/4**	**15.2**
	SNW-3036 x 6 1/2	S-3036 x 6 1/2			6 1/2					
	SNW-3038 x 6 13/16	S-3038 x 6 13/16			6 13/16					
	SNW-3038 x 6 7/8	S-3038 x 6 7/8			6 7/8					
23038K	**SNW-3038 x 6 15/16**	**S-3038**	**N-038**	**W-038**	**6 15/16**	**-0.005**	**4 13/32**	**1 1/8**	**8 11/16**	**16.7**
	SNW-3038 x 7	S-3038 x 7			7					
	SNW-3040 x 7 1/8	S-3040 x 7 1/8			7 1/8					
23040K	**SNW-3040 x 7 3/16**	**S-3040**	**N-040**	**W-040**	**7 3/16**	**-0.005**	**4 3/4**	**1 3/16**	**9 7/16**	**19.7**
	SNW-3040 x 7 1/4	S-3040 x 7 1/4			7 1/4					
	SNW-3044 x 7 13/16	S-3044 x 7 13/16			7 13/16					
	SNW-3044 x 7 7/8	S-3044 x 7 7/8			7 7/8					
23044K	**SNW-3044 x 7 15/16**	**S-3044**	**N-044**	**W-044**	**7 15/16**	**-0.005**	**5 1/8**	**1 1/4**	**10 1/4**	**24.4**
	SNW-3044 x 8	S-3044 x 8			8					

[1]Bold shaft sizes are standard. When ordering non-standard accessories, specify shaft size.
[2]Tolerance range is from +0 to value listed.

Continued on next page.

INCH ACCESSORIES – PULL-TYPE SLEEVES – *continued*

SNW/SNP – PULL-TYPE SLEEVE, LOCKNUT, LOCKWASHER/LOCKPLATE ASSEMBLIES

- The table below shows dimensions for adapter assemblies and components used in the mounting of tapered bore bearings on shafts.
- SNW assembly consists of a sleeve, locknut and lockwasher.
- SNP assembly consists of a sleeve, locknut and lockplate.

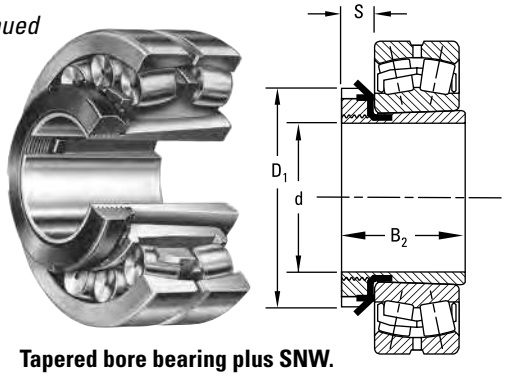

Tapered bore bearing plus SNW.

Continued from previous page.

Bearing Number[1]	Accessory Numbers				Shaft Dimensions		Adapter Dimensions			SNW/SNP Assembly Weight
	Assembly	Sleeve	Locknut	Lockwasher Lockplate	Diameter d	Tolerance[2]	B_2	S	D_1	
					in.	in.	in.	in.	in.	lbs.
	SNP-3048 x 8 7/16	S-3048 x 8 7/16			8 7/16					
	SNP-3048 x 8 1/2	S-3048 x 8 1/2			8 1/2					
23048K	**SNP-3048 x 8 15/16**	**S-3048**	**N-048**	**P-48**	**8 15/16**	**-0.006**	**5 7/16**	**1 11/32**	**11 7/16**	**32.2**
	SNP-3048 x 9	S-3048 x 9			9					
23052K	**SNP-3052 x 9 7/16**	**S-3052**	**N-052**	**P-52**	**9 7/16**	**-0.006**	**6 1/64**	**1 13/32**	**12 3/16**	**41.1**
	SNP-3052 x 9 1/2	S-3052 x 9 1/2			9 1/2					
	SNP-3056 x 9 15/16	S-3056 x 9 15/16			9 15/16					
	SNP-3056 x 10	S-3056 x 10			10					
23056K	**SNP-3056 x 10 7/16**	**S-3056**	**N-056**	**P-56**	**10 7/16**	**-0.007**	**6 3/16**	**1 1/2**	**13**	**45.4**
	SNP-3056 x 10 1/2	S-3056 x 10 1/2			10 1/2					
23060K	**SNP-3060 x 10 15/16**	**S-3060**	**N-060**	**P-60**	**10 15/16**	**-0.007**	**6 47/64**	**1 9/16**	**14 3/16**	**58.9**
	SNP-3060 x 11	S-3060 x 11			11					
	SNP-3064 x 11 7/16	S-3064 x 11 7/16			11 7/16					
	SNP-3064 x 11 1/2	S-3064 x 11 1/2			11 1/2					
23064K	**SNP-3064 x 11 15/16**	**S-3064**	**N-064**	**P-64**	**11 15/16**	**-0.007**	**6 61/64**	**1 21/32**	**15**	**65.7**
	SNP-3064 x 12	S-3064 x 12			12					
23068K	**SNP-3068 X 12 7/16**	**S-3068**	**N-068**	**P-68**	**12 7/16**	**-0.008**	**7 35/64**	**1 25/32**	**15 3/4**	**77.8**
	SNP-3068 X 12 1/2	S-3068 x 12 1/2			12 1/2					
	SNP-3072 X 12 15/16	S-3072 x 12 15/16			12 15/16					
	SNP-3072 X 13	S-3072 x 13			13					
23072K	**SNP-3072 X 13 7/16**	**S-3072**	**N-072**	**P-72**	**13 7/16**	**-0.008**	**7 37/64**	**1 25/32**	**16 1/2**	**86.2**
	SNP-3072 X 13 1/2	S-3072 x 13 1/2			13 1/2					
23076K	**SNP-3076 X 13 15/16**	**S-3076**	**N-076**	**P-76**	**13 15/16**	**-0.008**	**7 3/4**	**1 57/64**	**17 3/4**	**94.3**
	SNP-3076 X 14	S-3076 x 14			14					
23080K	**SNP-3080 x 15**	**S-3080**	**N-080**	**P-80**	**15**	**-0.008**	**8 13/32**	**2 1/16**	**18 1/2**	**100.0**
23084K	**SNP-3084 x 15 3/4**	**S-3084**	**N-084**	**P-84**	**15 3/4**	**-0.008**	**8 31/64**	**2 1/16**	**19 5/16**	**110.0**
23088K	**SNP-3088 x 16 1/2**	**S-3088**	**N-088**	**P-88**	**16 1/2**	**-0.008**	**9 7/64**	**2 3/8**	**20 1/2**	**144.0**
23092K	**SNP-3092 x 17**	**S-3092**	**N-092**	**P-92**	**17**	**-0.008**	**9 11/32**	**2 3/8**	**21 1/4**	**153.0**
23096K	**SNP-3096 x 18**	**S-3096**	**N-096**	**P-96**	**18**	**-0.008**	**9 29/64**	**2 3/8**	**22 1/16**	**162.0**
230/500K	**SNP-30/500 x 18 1/2**	**S-30/500**	**N-500**	**P-500**	**18 1/2**	**-0.008**	**9 27/32**	**2 45/64**	**22 13/16**	**180.0**
230/530K	**SNP-30/530 x 19 1/2**	**S-30/530**	**N-530**	**P-530**	**19 1/2**	**-0.008**	**10 37/64**	**2 45/64**	**24 13/16**	**221.0**
230/560K	**SNP-30/560 x 20 15/16**	**S-30/560**	**N-560**	**P-560**	**20 15/16**	**-0.008**	**11 7/32**	**2 61/64**	**25 9/16**	**243.0**
230/600K	**SNP-30/600 x 21 15/16**	**S-30/600**	**N-600**	**P-600**	**21 15/16**	**-0.008**	**11 29/64**	**2 61/64**	**27 9/16**	**322.0**
230/630K	**SNP-30/630 x 23 15/16**	**S-30/630**	**N-630**	**P-630**	**23 15/16**	**-0.008**	**11 59/64**	**2 61/64**	**28 3/4**	**350.0**
230/670K	**SNP-30/670 x 24 15/16**	**S-30/670**	**N-670**	**P-670**	**24 15/16**	**-0.008**	**12 27/32**	**3 9/64**	**30 11/16**	**421.0**
230/710K	**SNP-30/710 x 26 7/16**	**S-30/710**	**N-710**	**P-710**	**26 7/16**	**-0.008**	**13 1/2**	**3 37/64**	**32 11/16**	**492.0**
230/750K	**SNP-30/750 x 27 15/16**	**S-30/750**	**N-750**	**P-750**	**27 15/16**	**-0.008**	**14 3/32**	**3 37/64**	**34 1/4**	**536.0**
230/800K	**SNP-30/800 x 29 7/16**	**S-30/800**	**N-800**	**P-800**	**29 7/16**	**-0.008**	**14 13/32**	**3 37/64**	**36 1/4**	**662.0**
230/850K	**SNP-30/850 x 31 7/16**	**S-30/850**	**N-850**	**P-850**	**31 7/16**	**-0.008**	**15**	**3 37/64**	**38 9/16**	**747.0**
230/900K	**SNP-30/900 x 33 7/16**	**S-30/900**	**N-900**	**P-900**	**33 7/16**	**-0.008**	**15 11/16**	**3 61/64**	**40 9/16**	**853.0**
230/950K	**SNP-30/950 x 34 7/16**	**S-30/950**	**N-950**	**P-950**	**35 7/16**	**-0.008**	**16 1/2**	**3 61/64**	**43**	**935.0**

[1]Bold shaft sizes are standard. When ordering non-standard accessories, specify shaft size.
[2]Tolerance range is from +0 to value listed.

Continued on next page.

Continued from previous page.

Bearing Number[1]	Accessory Numbers				Shaft Dimensions		Adapter Dimensions			SNW/SNP Assembly Weight
	Assembly	Sleeve	Locknut	Lockwasher Lockplate	Diameter d	Tolerance[2]	B_2	S	D_1	
					in.	in.	in.	in.	in.	lbs.
SERIES 223K AND 232K										
22308K	**SNW-108 x 1 5/16**	**S-108**	**N-08**	**W-08**	**1 5/16**	**-0.003**	**2 1/64**	**1/2**	**2 1/4**	**0.8**
22309K	**SNW-109 x 1 7/16**	**S-109**	**N-09**	**W-09**	**1 7/16**	**-0.003**	**2 9/64**	**1/2**	**2 17/32**	**0.8**
22310K	**SNW-110 x 1 11/16**	**S-110**	**N-10**	**W-10**	**1 11/16**	**-0.003**	**2 25/64**	**9/16**	**2 11/16**	**0.9**
22311K	**SNW-111 x 1 15/16**	**S-111**	**N-11**	**W-11**	**1 15/16**	**-0.003**	**2 33/64**	**9/16**	**2 31/32**	**0.9**
22312K	**SNW-112 x 2 1/16**	**S-112**	**N-12**	**W-12**	**2 1/16**	**-0.004**	**2 21/32**	**19/32**	**3 5/32**	**1.2**
22313K	**SNW-113 x 2 3/16**	**S-113**	**N-13**	**W-13**	**2 3/16**	**-0.004**	**2 49/64**	**5/8**	**3 3/8**	**1.7**
22314K	**SNW-114 x 2 5/16**	**S-114**	**N-14**	**W-14**	**2 5/16**	**-0.004**	**2 61/64**	**5/8**	**3 5/8**	**2.3**
	SNW-115 x 2 3/8	S-115 x 2 3/8			2 3/8					
22315K	**SNW-115 x 2 7/16**	**S-115**	**AN-15**	**W-15**	**2 7/16**	**-0.004**	**3 5/64**	**43/64**	**3 7/8**	**3.0**
	SNW-115 x 2 1/2	S-115 x 2 1/2			2 1/2					
	SNW-116 x 2 5/8	S-116 x 2 5/8			2 5/8					
22316K	**SNW-116 x 2 11/16**	**S-116**	**AN-16**	**W-16**	**2 11/16**	**-0.004**	**3 13/64**	**43/64**	**4 5/32**	**3.2**
	SNW-116 x 2 3/4	S-116 x 3/4			2 3/4					
	SNW-117 x 2 13/16	S-117 x 2 13/16			2 13/16					
	SNW-117 x 2 7/8	S-117 x 2 7/8			2 7/8					
22317K	**SNW-117 x 2 15/16**	**S-117**	**AN-17**	**W-17**	**2 15/16**	**-0.004**	**3 5/16**	**45/64**	**4 13/32**	**3.5**
	SNW-117 x 3	S-117 x 3			3					
	SNW-118 x 3 1/16	S-118 x 3 1/16			3 1/16					
	SNW-118 x 3 1/8	S-118 x 3 1/8			3 1/8					
22318K	**SNW-118 x 3 3/16**	**S-118**	**AN-18**	**W-18**	**3 3/16**	**-0.004**	**3 35/64**	**25/32**	**4 21/32**	**4.0**
	SNW-118 x 3 1/4	S-118 x 3 1/4			3 1/4					
22319K	**SNW-119 x 3 5/16**	**S-119**	**AN-19**	**W-19**	**3 5/16**	**-0.004**	**3 45/64**	**13/16**	**4 15/16**	**5.0**
	SNW-120 x 3 5/16	S-120 x 3 5/16			3 5/16					
	SNW-120 x 3 3/8	S-120 x 3 7/8			3 3/8					
22320K 23220K	**SNW-120 x 3 7/16**	**S-120**	**AN-20**	**W-20**	**3 7/16**	**-0.004**	**3 31/32**	**27/32**	**5 3/16**	**6.2**
	SNW-120 x 3 1/2	S-120 x 3 1/2			3 1/2					
	SNW-122 x 3 13/16	S-122 x 3 13/16			3 13/16					
	SNW-122 x 3 3/8	S-122 x 3 3/8			3 7/8					
22322K 23222K	**SNW-122 x 3 15/16**	**S-122**	**AN-22**	**W-22**	**3 15/16**	**-0.004**	**4 11/32**	**29/32**	**5 23/32**	**6.5**
	SNW-122 x 4	S-122 x 4			4					

[1]Bold shaft sizes are standard. When ordering non-standard accessories, specify shaft size.
[2]Tolerance range is from +0 to value listed.

Continued on next page.

INCH ACCESSORIES – PULL-TYPE SLEEVES – *continued*

SNW/SNP – PULL-TYPE SLEEVE, LOCKNUT, LOCKWASHER/LOCKPLATE ASSEMBLIES

- The table below shows dimensions for adapter assemblies and components used in the mounting of tapered bore bearings on shafts.
- SNW assembly consists of a sleeve, locknut and lockwasher.
- SNP assembly consists of a sleeve, locknut and lockplate.

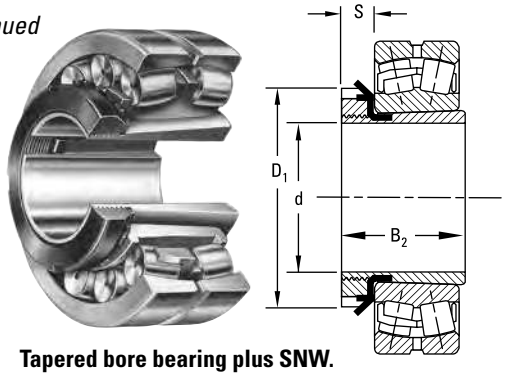

Tapered bore bearing plus SNW.

Continued from previous page.

Bearing Number[1]		Accessory Numbers				Shaft Dimensions		Adapter Dimensions			SNW/SNP Assembly Weight
		Assembly	Sleeve	Locknut	Lockwasher Lockplate	Diameter d	Tolerance[2]	B_2	S	D_1	
						in.	in.	in.	in.	in.	lbs.
		SNW-124 x 4 1/16	S-124 x 4 1/16			4 1/16					
		SNW-124 x 4 1/8	S-124 x 4 1/8			4 1/8					
22324K	**23224K**	**SNW-124 x 4 3/16**	**S-124**	**AN-24**	**W-24**	**4 3/16**	**-0.005**	**4 41/64**	**15/16**	**6 1/8**	**8.0**
		SNW-124 x 4 1/4	S-124 x 4 1/4			4 1/4					
		SNW-126 x 4 5/16	S-126 x 4 5/16			4 5/16					
		SNW-126 x 4 3/8	S-126 4 3/8			4 3/8					
22326K	**23226K**	**SNW-126 x 4 7/16**	**S-126**	**AN-26**	**W-26**	**4 7/16**	**-0.005**	**4 63/64**	**1**	**6 3/4**	**12.4**
		SNW-126 x 4 1/2	S-126 x 4 1/2			4 1/2					
		SNW-126 x 4 9/16	S-126 x 4 9/16			4 9/16					
		SNW-128 x 4 13/16	S-128 x 4 13/16			4 13/16					
		SNW-128 x 4 7/8	S-128 x 4 7/8			4 7/8					
22328K	**23228K**	**SNW-128 x 4 15/16**	**S-128**	**AN-28**	**W-28**	**4 15/16**	**-0.005**	**5 21/64**	**1 1/16**	**7 3/32**	**13.0**
		SNW-128 x 5	S-128 x 5			5					
		SNW-130 x 5 1/8	S-130 x 5 1/8			5 1/8					
22330K	**23230K**	**SNW-130 x 5 3/16**	**S-130**	**AN-30**	**W-30**	**5 3/16**	**-0.005**	**5 5/8**	**1 1/8**	**7 11/16**	**17.6**
		SNW-130 x 5 1/4	S-130 x 5 1/4			5 1/4					
		SNW-130 x 5 5/16	S-130 x 5 5/16			5 5/16					
		SNW-130 x 5 3/8	S-130 x 5 3/8			5 3/8					
		SNW-132 x 5 3/8	S-132 x 5 3/8								
22332K	**23232K**	**SNW-132 x 5 7/16**	**S-132**	**AN-32**	**W-32**	**5 7/16**	**-0.005**	**5 59/64**	**1 3/16**	**8 1/16**	**18.5**
		SNW-132 x 5 1/2	S-132 x 5 1/2								
		SNW-134 x 5 13/16	S-134 x 5 13/16								
		SNW-134 x 5 7/8	S-134 x 5 7/8								
22334K	**23234K**	**SNW-134 x 5 15/16**	**S-134**	**AN-34**	**W-34**	**5 15/16**	**-0.005**	**6 3/16**	**1 7/32**	**8 21/32**	**21.0**
		SNW-134 x 6	S-134 x 6								
22336K	**23236K**	**SNW-136 x 6 7/16**	**S-136**	**AN-36**	**W-36**	**6 7/16**	**-0.005**	**6 29/64**	**1 1/4**	**9 1/16**	**22.5**
		SNW-138 x 6 13/16	S-138 x 6 13/16								
		SNW-138 x 6 7/8	S-138 x 6 7/8								
22338K	**23238K**	**SNW-138 x 6 15/16**	**S-138**	**AN-38**	**W-38**	**6 15/16**	**-0.005**	**6 3/4**	**1 9/32**	**9 15/32**	**28.0**
		SNW-138 x 7	S-138 x 7								
		SNW-140 x 7 1/8	S-140 x 7 1/8			7 1/8					
22340K	**23240K**	**SNW-140 x 7 3/16**	**S-140**	**AN-40**	**W-40**	**7 3/16**	**-0.005**	**7 3/32**	**1 11/32**	**9 27/32**	**36.0**
		SNW-140 x 7 1/4	S-140 x 7 1/4			7 1/4					

[1]Bold shaft sizes are standard. When ordering non-standard accessories, specify shaft size.
[2]Tolerance range is from +0 to value listed.

Continued on next page.

Continued from previous page.

Bearing Number[1]		Accessory Numbers				Shaft Dimensions		Adapter Dimensions			SNW/SNP Assembly Weight
		Assembly	Sleeve	Locknut	Lockwasher Lockplate	Diameter d	Tolerance[2]	B_2	S	D_1	
						in.	in.	in.	in.	in.	lbs.
22344K	**23244K**	**SNW-144 x 7 15/16**	**S-144**	**N-044**	**W-44**	**7 15/16**	**-0.005**	**7 9/32**	**1 3/8**	**11**	**47.0**
22348K	**23248K**	**SNP-148 x 8 15/16**	**S-148**	**N-048**	**P-48**	**8 15/16**	**-0.006**	**8 7/64**	**1 11/32**	**11 7/16**	**38.3**
		SNP-148 x 9	S-148 x 9			9					
22352K	**23252K**	**SNP-152 x 9 7/16**	**S-152**	**N-052**	**P-52**	**9 7/16**	**-0.006**	**8 49/64**	**1 13/32**	**12 13/16**	**53.4**
		SNP-152 x 9 ½	S-152 x 9 ½			9 ½					
22356K	**23256K**	**SNP-3256 x 10 7/16**	**S-3256**	**N-056**	**P-56**	**10 7/16**	**-0.007**	**8 15/16**	**1 ½**	**13**	**61.3**
		SNP-3256 x 10 ½	S-3256 x 10 ½			10 ½	-0.007				
23260K		**SNP-3260 x 10 15/16**	**S-3260**	**N-060**	**P-60**	**10 15/16**	**-0.007**	**9 5/8**	**1 9/16**	**14 3/32**	**68.5**
		SNP-3260 x 11	S-3260 x 11			11	-0.007				
23264K		**SNP-3264 x 11 15/16**	**S-3264**	**N-064**	**P-64**	**11 15/16**	**-0.007**	**10 23/64**	**1 21/32**	**15**	**98.0**
		SNP-3264 x 12	S-3264 x 12			12	-0.007				
		SNP-3268 x 12 ½	S-3268 x 12 ½			12 ½	-0.007				
23268K		**SNP-3268 x 12 7/8**	**S-3268**	**N-068**	**P-68**	**12 7/8**	**-0.007**	**11 1/8**	**1 25/32**	**15 3/4**	**105.0**
23272K		**SNP-3272 x 13 7/16**	**S-3272**	**N-072**	**P-72**	**13 7/16**	**-0.007**	**11 27/64**	**1 25/32**	**16 ½**	**135.0**
		SNP-3272 x 13 ½	S-3272 x 13 ½			13 ½	-0.007				
23276K		**SNP-3276 x 13 15/16**	**S-3276**	**N-076**	**P-76**	**13 15/16**	**-0.007**	**11 7/8**	**1 29/32**	**17 3/4**	**145.0**
		SNP-3276 x 14	S-3276 x 14			14	-0.007				
23280K		**SNP-3280 x 15**	**S-3280**	**N-080**	**P-80**	**15**	**-0.007**	**12 21/32**	**2 1/16**	**18 ½**	**165.0**
23284K		**SNP-3284 x 15 3/4**	**S-3284**	**N-084**	**P-84**	**15 3/4**	**-0.007**	**13 19/64**	**2 1/16**	**19 5/16**	**170.0**
23288K		**SNP-3288 x 16 ½**	**S-3288**	**N-088**	**P-88**	**16 ½**	**-0.007**	**13 61/64**	**2 3/8**	**20 ½**	**260.0**
23292K		**SNP-3292 x 16 15/16**	**S-3292**	**N-092**	**P-92**	**16 15/16**	**-0.007**	**18 1/16**	**2 3/8**	**21 1/4**	**291.0**
23296K		**SNP-3296 x 17 15/16**	**S-3296**	**N-096**	**P-96**	**17 15/16**	**-0.007**	**15 5/32**	**2 3/8**	**22 1/16**	**335.0**
232/500K		**SNP-32/500 x 18 7/16**	**S-32/500**	**N-500**	**P-500**	**18 7/16**	**-0.007**	**16 ½**	**2 45/64**	**22 13/16**	**366.0**
232/530K		**SNP-32/530 x 18 15/16**	**S-32/530 x 18 15/16**	**N-530**	**P-530**	**18 15/16**	**-0.007**	**17 17/64**	**2 45/64**	**24 13/16**	**421.0**
		SNP-32/530 x 19 7/16	S-32/530 x 19 7/16			19 7/16	-0.007				
232/560K		**SNP-32/560 x 20 15/16**	**S-32/560**	**N-560**	**P-560**	**20 15/16**	**-0.007**	**17 59/64**	**2 61/64**	**25 9/16**	**478.0**
232/600K		**SNP-32/600 x 21 15/16**	**S-32/600**	**N-600**	**P-600**	**21 15/16**	**-0.007**	**18 55/64**	**2 61/64**	**27 9/16**	**613.0**
232/630K		**SNP-32/630 x 23 15/16**	**S-32/630**	**N-630**	**P-630**	**23 15/16**	**-0.007**	**19 51/64**	**2 61/64**	**28 3/4**	**657.0**
232/670K		**SNP-32/670 x 24 15/16**	**S-32/670**	**N-670**	**P-670**	**24 15/16**	**-0.007**	**21 1/32**	**3 9/64**	**30 11/16**	**891.0**
232/710K		**SNP-32/710 x 26 7/16**	**S-32/710**	**N-710**	**P-710**	**26 7/16**	**-0.007**	**21 15/16**	**3 37/64**	**32 11/16**	**979.0**
232/750K		**SNP-32/750 x 27 15/16**	**S-32/750**	**N-750**	**P-750**	**27 15/16**	**-0.007**	**22 63/64**	**3 37/64**	**34 1/4**	**1118.0**

[1]Bold shaft sizes are standard. When ordering non-standard accessories, specify shaft size.
[2]Tolerance range is from +0 to value listed.

Continued on next page.

INCH ACCESSORIES – PULL-TYPE SLEEVES – *continued*

SNW/SNP – PULL-TYPE SLEEVE, LOCKNUT, LOCKWASHER/LOCKPLATE ASSEMBLIES

- The table below shows dimensions for adapter assemblies and components used in the mounting of tapered bore bearings on shafts.
- SNW assembly consists of a sleeve, locknut and lockwasher.
- SNP assembly consists of a sleeve, locknut and lockplate.

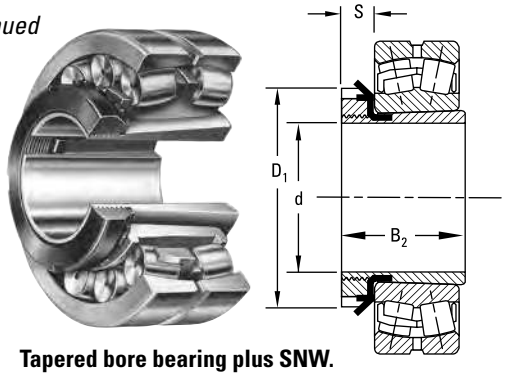

Tapered bore bearing plus SNW.

Continued from previous page.

Bearing Number[1]	Accessory Numbers				Shaft Dimensions		Adapter Dimensions			SNW/SNP Assembly Weight
	Assembly	Sleeve	Locknut	Lockwasher Lockplate	Diameter d	Tolerance[2]	B_2	S	D_1	
					in.	in.	in.	in.	in.	lbs.
SERIES 231K										
23122K	**SNW-3122 x 3 15/16**	**S-22**	**N-022**	**W-022**	**3 15/16**	**-0.004**	**3 13/64**	**25/32**	**5 5/32**	**4.2**
23124K	**SNW-3124 x 4 3/16**	**S-24**	**N-024**	**W-024**	**4 3/16**	**-0.005**	**3 15/32**	**13/16**	**5 11/16**	**5.8**
23126K	**SNW-3126 x 4 7/16**	**S-26**	**N-026**	**W-026**	**4 7/16**	**-0.005**	**3 49/64**	**7/8**	**6 1/8**	**8.3**
23128K	**SNW-3128 x 4 15/16**	**S-28**	**N-028**	**W-028**	**4 15/16**	**-0.005**	**3 63/64**	**15/16**	**6 1/2**	**8.8**
23130K	**SNW-3130 x 5 3/16**	**S-30**	**N-030**	**W-030**	**5 3/16**	**-0.005**	**4 15/64**	**31/32**	**7 1/8**	**13.7**
23132K	**SNW-3132 x 5 7/16**	**S-32**	**N-032**	**W-032**	**5 7/16**	**-0.005**	**4 37/64**	**1 1/32**	**7 1/2**	**13.3**
23134K	**SNW-3134 x 5 15/16**	**S-34**	**N-034**	**W-034**	**5 15/16**	**-0.005**	**4 27/32**	**1 1/16**	**7 7/8**	**16.1**
23136K	**SNW-3136 x 6 7/16**	**S-36**	**N-036**	**W-036**	**6 7/16**	**-0.005**	**5 1/32**	**1 3/32**	**8 1/4**	**17.1**
23138K	**SNW-3138 x 6 15/16**	**S-38**	**N-038**	**W-038**	**6 15/16**	**-0.005**	**5 17/64**	**1 1/8**	**8 11/16**	**19.7**
23140K	**SNW-3140 x 7 3/16**	**S-40**	**N-040**	**W-040**	**7 3/16**	**-0.005**	**5 31/64**	**1 3/16**	**9 7/16**	**28.4**
23144K	**SNW-3144 x 7 15/16**	**S-44**	**N-044**	**W-044**	**7 15/16**	**-0.005**	**5 29/32**	**1 1/4**	**10 1/4**	**28.1**
23148K	**SNP-3148 x 8 15/16**	**S-48**	**N-048**	**P-48**	**8 15/16**	**-0.006**	**6 41/64**	**1 11/32**	**11 7/16**	**36.0**
23152K	**SNP-3152 x 9 7/16**	**S-52**	**N-052**	**P-52**	**9 7/16**	**-0.006**	**7 19/32**	**1 13/32**	**12 3/16**	**39.0**
	SNP-3152 x 9 1/2	S-52 x 9 1/2			9 1/2					
	SNP-3156 x 9 15/16	S-3156 x 9 15/16			9 15/16					
	SNP-3156 x 10	S-3156 x 10			10					
23156K	**SNP-3156 x 10 7/16**	**S-3156**	**N-056**	**P-56**	**10 7/16**	**-0.007**	**7 49/64**	**1 1/2**	**13**	**60.0**
	SNP-3156 x 10 1/2	S-3156 x 10 1/2			10 1/2					
23160K	**SNP-3160 x 10 15/16**	**S-3160**	**N-060**	**P-60**	**10 15/16**	**-0.007**	**8 3/8**	**1 9/16**	**14 3/16**	**65.0**
	SNP-3160 x 11	S-3160 x 11			11					
23164K	**SNP-3164 x 11 15/16**	**S-3164**	**N-064**	**P-64**	**11 15/16**	**-0.007**	**9 7/64**	**1 21/32**	**15**	**70.0**
	SNP-3164 x 12	S-3164 x 12			12					
	SNP-3168 x 12 1/2	S-3168 x 12 1/2			12 1/2					
23168K	**SNP-3168 x 12 7/8**	**S-3168**	**N-068**	**P-68**	**12 7/8**	**-0.007**	**9 25/32**	**1 25/32**	**15 3/4**	**93.5**
23172K	**SNP-3172 x 13 7/16**	**S-3172**	**N-072**	**P-72**	**13 7/16**	**-0.007**	**11 27/64**	**1 25/32**	**16 1/2**	**120.0**
	SNP-3172 x 13 1/2	S-3172 x 13 1/2			13 1/2					
23176K	**SNP-3176 x 13 15/16**	**S-3176**	**N-076**	**P-76**	**13 15/16**	**-0.007**	**11 7/8**	**1 29/32**	**17 3/4**	**125.0**
	SNP-3176 x 14	S-3176 x 14			14					
	SNP-3180 x 14 15/16	S-3180 x 14 15/16			14 15/16					
23180K	**SNP-3180 x 15**	**S-3180**	**N-080**	**P-80**	**15**	**-0.007**	**12 21/32**	**2 1/16**	**18 1/2**	**140.0**

[1]Bold shaft sizes are standard. When ordering non-standard accessories, specify shaft size.
[2]Tolerance range is from +0 to value listed.

Continued on next page.

Continued from previous page.

Bearing Number[1]	Accessory Numbers				Shaft Dimensions		Adapter Dimensions			SNW/SNP Assembly Weight
	Assembly	Sleeve	Locknut	Lockwasher Lockplate	Diameter d	Tolerance[2]	B_2	S	D_1	
					in.	in.	in.	in.	in.	lbs.
23184K	**SNP-3184 x 15 3/4**	**S-3184**	**N-084**	**P-84**	**15 3/4**	**-0.007**	**13 19/64**	**2 1/16**	**19 5/16**	**145.0**
23188K	**SNP-3188 x 16 1/2**	**S-3188**	**N-088**	**P-88**	**16 1/2**	**-0.007**	**13 61/64**	**2 3/8**	**20 1/2**	**229.0**
23192K	**SNP-3192 x 17**	**S-3192**	**N-092**	**P-92**	**17**	**-0.007**	**18 1/16**	**2 3/8**	**21 1/4**	**255.0**
23196K	**SNP-3196 x 18**	**S-3196**	**N-096**	**P-96**	**18**	**-0.007**	**15 5/32**	**2 3/8**	**22 1/16**	**293.0**
231/500K	**SNP-31/500 x 18 7/16**	**S-31/500**	**N-500**	**P-500**	**18 7/16**	**-0.007**	**16 1/2**	**2 45/64**	**22 13/16**	**315.0**
231/530K	**SNP-31/530 x 18 15/16**	**S-31/530 x 18 15/16**	**N-530**	**P-530**	**18 15/16**	**-0.007**	**17 17/64**	**2 45/64**	**24 13/16**	**355.0**
	SNP-31/530 x 19 7/16	S-31/530 x 19 7/16			19 7/16					
231/560K	**SNP-31/560 x 20 15/16**	**S-31/560**	**N-560**	**P-560**	**20 15/16**	**-0.007**	**17 59/64**	**2 61/64**	**25 9/16**	**408.0**
231/600K	**SNP-31/600 x 21 15/16**	**S-31/600**	**N-600**	**P-600**	**21 15/16**	**-0.007**	**18 55/64**	**2 61/64**	**27 9/16**	**516.0**
231/630K	**SNP-31/630 x 23 15/16**	**S-31/630**	**N-630**	**P-630**	**23 15/16**	**-0.007**	**19 51/64**	**2 61/64**	**28 3/4**	**556.0**
231/670K	**SNP-31/670 x 24 15/16**	**S-31/670**	**N-670**	**P-670**	**24 15/16**	**-0.007**	**21 1/32**	**3 9/64**	**30 11/16**	**759.0**
231/710K	**SNP-31/710 x 26 7/16**	**S-31/710**	**N-710**	**P-710**	**26 7/16**	**-0.007**	**21 15/16**	**3 37/64**	**32 11/16**	**833.0**
231/750K	**SNP-31/750 x 27 15/16**	**S-31/750**	**N-750**	**P-750**	**27 15/16**	**-0.007**	**22 63/64**	**3 37/64**	**34 1/4**	**997.0**
231/800K	**SNP-31/800 x 29 7/16**	**S-31/800**	**N-800**	**P-800**	**29 7/16**	**-0.007**	**19 1/64**	**3 37/64**	**36 1/4**	**1136.0**
231/850K	**SNP31/850 x 31 7/16**	**S-31/850**	**N-850**	**P-850**	**31 7/16**	**-0.007**	**20 1/32**	**3 37/64**	**38 9/16**	**1303.0**

[1]Bold shaft sizes are standard. When ordering non-standard accessories, specify shaft size.
[2]Tolerance range is from +0 to value listed.

INCH ACCESSORIES – PUSH-TYPE SLEEVES

PUSH-TYPE REMOVABLE SLEEVE, LOCKNUT AND LOCKWASHER

The chart below shows dimensions for adapter assemblies and components used in the tapered bore bearings on shafts.

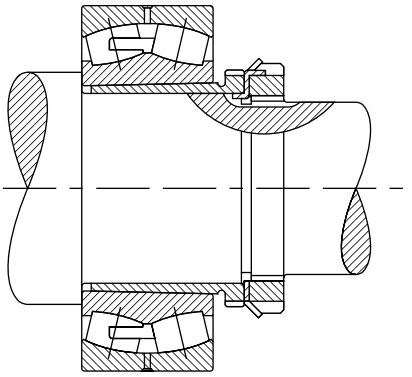

Bearing Number	Accessory Numbers				Shaft Dimensions		Adapter Dimensions			Removal Nut O.D. C	Sleeve Weight
	Sleeve	Locknut	Lockwasher Lockplate	Removal Nut	Diameter d	Tolerance[1]	Pitch Diameter B	L	a		
					mm in.	**mm** in.	**mm** in.	**mm** in.	**mm** in.	**mm** in.	**kg.** lbs.
SERIES 222K											
22216K	SK-8022	N-14	W-14	AN-18	**70** 2.7559	**-0.10** -0.004	**88.19** 3.472	**50** 1.969	**3.50** 0.138	**118.39** 4.661	**0.5** 1.2
22217K	SK-8522	AN-15	W-15	AN-19	**75** 2.9528	**-0.10** -0.004	**93.35** 3.675	**52** 2.047	**3.50** 0.138	**125.55** 4.943	**0.6** 1.4
22218K	SK-9022	AN-16	W-16	AN-20	**80** 3.1496	**-0.10** -0.004	**98.12** 3.863	**53** 2.087	**3.50** 0.138	**131.90** 5.193	**0.6** 1.5
22219K	SK-9522	AN-17	W-17	AN-21	**85** 3.3465	**-0.10** -0.004	**103.28** 4.066	**57** 2.244	**4.00** 0.157	**138.25** 5.443	**0.8** 1.8
22220K	SK-10022	AN-18	W-18	AN-22	**90** 3.5433	**-0.10** -0.004	**109.12** 4.269	**59** 2.323	**4.00** 0.157	**145.39** 5.724	**0.9** 2.0
22222K	SK-11022	AN-20	W-20	ARN-22	**100** 3.9370	**-0.10** -0.004	**119.94** 4.722	**65** 2.559	**4.00** 0.157	**158.75** 6.250	**1.1** 2.4
22224K	SK-12022	AN-22	W-22	ARN-24	**110** 4.3307	**-0.13** -0.005	**130.28** 5.129	**72** 2.835	**4.00** 0.157	**174.63** 6.875	**1.4** 3.1
22226K	SK-13022	AN-22	W-22	ARN-26	**115** 4.5276	**-0.13** -0.005	**141.38** 5.566	**78** 3.071	**4.00** 0.15.7	**184.15** 7.250	**2.2** 5.0
22228K	SK-14022	AN-24	W-24	RN-28	**125** 4.9213	**-0.13** -0.005	**152.73** 6.013	**82** 3.228	**5.00** 0.197	**200.03** 7.875	**2.6** 5.8
22230K	SK-15022	AN-26	W-26	RN-30	**135** 5.3150	**-0.13** -0.005	**163.04** 6.419	**88** 3.465	**5.00** 0.197	**209.55** 8.250	**3.0** 6.8
22232K	SK-16022	AN-28	W-28	RN-32	**140** 5.5118	**-0.13** -0.005	**173.76** 6.841	**96** 3.780	**5.00** 0.197	**225.43** 8.875	**4.5** 9.9

[1]Tolerance range is from +0 to value listed.

Continued on next page.

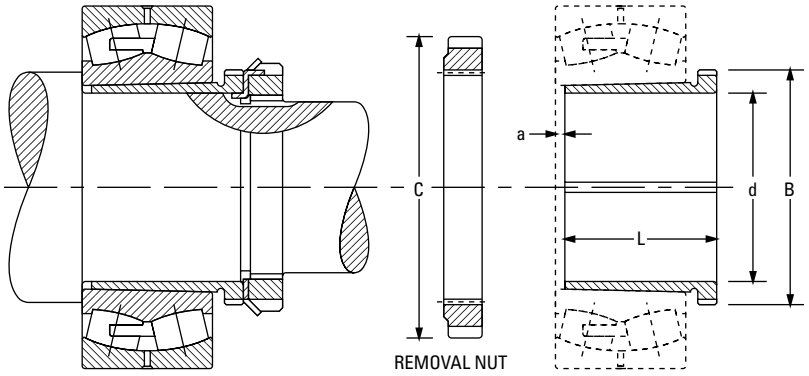

Tapered bore bearing mounted with push-type removable sleeve.

Continued from previous page.

Bearing Number	Accessory Numbers				Shaft Dimensions		Adapter Dimensions			Removal Nut O.D. C	Sleeve Weight
	Sleeve	Locknut	Lockwasher Lockplate	Removal Nut	Diameter d	Tolerance[1]	Pitch Diameter B	L	a		
					mm in.	**mm** in.	**mm** in.	**mm** in.	**mm** in.	**mm** in.	**kg.** lbs.
22234K	SK-17022	AN-30	W-30	RN-34	**150** 5.9055	**-0.13** -0.005	**184.07** 7.247	**104** 4.095	**5.00** 0.197	**234.95** 9.250	**5.2** 11.5
22236K	SK-18022	AN-32	W-32	RN-36	**160** 6.2992	**-0.13** -0.005	**194.79** 7.669	**104** 4.095	**5.00** 0.197	**247.65** 9.750	**5.6** 12.5
22238K	SK-19022	AN-34	W-34	RN-38	**170** 6.6929	**-0.13** -0.005	**205.92** 8.107	**112** 4.409	**5.00** 0.197	**269.88** 10.625	**6.5** 14.5
22240K	SK-20022	AN-36	W-36	N-044	**180** 7.0866	**-0.13** -0.005	**217.02** 8.544	**118** 4.646	**5.00** 0.197	**279.53** 11.005	**7.4** 16.3
22244K	SK-22022	AN-40	W-40	N-048	**200** 7.8740	**-0.13** -0.005	**236.98** 9.330	**130** 5.118	**6.00** 0.236	**290.65** 11.443	**8.8** 19.6
22248K	SK-24022	N-44	W-44	N-052	**220** 8.6614	**-0.15** -0.006	**256.03** 10.080	**144** 5.669	**6.00** 0.236	**309.70** 12.193	**11.0** 24.3
22252K	SK-26022	N-048	P-48	N-056	**240** 9.4488	**-0.15** -0.006	**276.66** 10.892	**155** 6.102	**6.00** 0.236	**330.33** 13.005	**14.0** 30.9
22256K	SK-28022	N-052	P-52	RN-56	**260** 10.2362	**-0.15** -0.006	**301.27** 11.861	**155** 6.102	**8.00** 0.315	**425.45** 16.750	**15.0** 33.1
22260K	SK-30022	N-056	P-56	RN-60	**280** 11.0236	**-0.15** -0.006	**325.88** 12.830	**170** 6.693	**8.00** 0.315	**416.10** 16.382	**17.7** 39.2
22264K	SK-32022	N-060	P-60	RN-64	**300** 11.8110	**-0.15** -0.006	**345.72** 13.611	**180** 7.087	**10.00** 0.394	**431.8** 17.000	**21.0** 46.3

[1]Tolerance range is from +0 to value listed.

Continued on next page.

INCH ACCESSORIES – PUSH-TYPE SLEEVES – *continued*

PUSH-TYPE REMOVABLE SLEEVE, LOCKNUT AND LOCKWASHER

The chart below shows dimensions for adapter assemblies and components used in the tapered bore bearings on shafts.

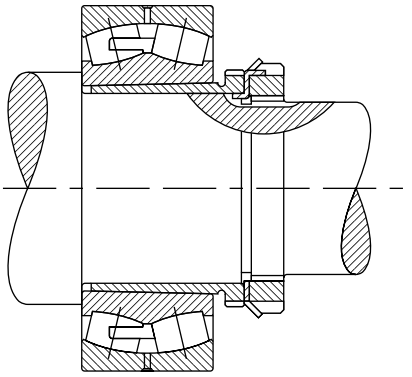

Continued from previous page.

Bearing Number	Accessory Numbers				Shaft Dimensions		Adapter Dimensions			Removal Nut O.D. C	Sleeve Weight
	Sleeve	Locknut	Lockwasher Lockplate	Removal Nut	Diameter d	Tolerance[1]	Pitch Diameter B	L	a		
					mm in.	**mm** in.	**mm** in.	**mm** in.	**mm** in.	**mm** in.	**kg.** lbs.
SERIES 223K											
22308K	SK-4023	N-07	W-07	N-09	**35** 1.3780	**-0.08** -0.003	**43.94** 1.730	**40** 1.575	**3.00** 0.118	**64.41** 2.536	**0.1** 0.2
22309K	SK-4523	N-08	W-08	N-10	**40** 1.5748	**-0.08** -0.003	**49.02** 1.930	**44** 1.732	**3.00** 0.118	**68.40** 2.693	**0.1** 0.3
22310K	SK-5023	N-09	W-09	RN-10	**45** 1.7717	**-0.08** -0.003	**55.04** 2.167	**50** 1.969	**3.00** 0.118	**76.20** 3.000	**0.2** 0.4
22311K	SK-5523	N-10	W-10	RN-11	**50** 1.9685	**-0.08** -0.003	**60.20** 2.370	**54** 2.126	**3.00** 0.118	**81.76** 3.219	**0.2** 0.5
22312K	SK-6023	N-11	W-11	RN-12	**55** 2.1654	**-0.10** -0.004	**65.76** 2.589	**57** 2.244	**3.50** 0.138	**87.33** 3.438	**0.3** 0.6
22313K	SK-6523	N-12	W-12	AN-15	**60** 2.3622	**-0.10** -0.004	**73.10** 2.878	**61** 2.402	**3.50** 0.138	**98.55** 3.880	**0.3** 0.8
22314K	SK-7023	N-12	W-12	AN-16	**60** 2.3622	**-0.10** -0.004	**78.28** 3.082	**65** 2.559	**3.50** 0.138	**105.69** 4.161	**0.6** 1.5
22315K	SK-7523	N-13	W-13	AN-17	**65** 2.5591	**-0.10** -0.004	**83.44** 3.285	**69** 2.717	**3.50** 0.138	**112.04** 4.411	**0.8** 1.7
22316K	SK-8023	N-14	W-14	AN-18	**70** 2.7559	**-0.10** -0.004	**88.19** 3.472	**72** 2.835	**3.50** 0.138	**118.39** 4.661	**0.9** 2.0
22317K	SK-8523	AN-15	W-15	AN-19	**75** 2.9528	**-0.10** -0.004	**93.35** 3.675	**75** 2.953	**3.50** 0.138	**125.55** 4.943	**1.0** 2.2
22318K	SK-9023	AN-16	W-16	AN-20	**80** 3.1496	**-0.10** -0.004	**98.12** 3.863	**80** 3.150	**3.50** 0.138	**131.90** 5.193	**1.1** 2.5
22319K	SK-9523	AN-17	W-17	AN-21	**85** 3.3465	**-0.10** -0.004	**103.28** 4.066	**85** 3.346	**4.00** 0.157	**138.25** 5.443	**1.3** 2.9
22320K	SK-10023	AN-18	W-18	AN-22	**90** 3.5433	**-0.10** -0.004	**109.12** 4.269	**90** 3.543	**4.00** 0.157	**145.39** 5.724	**1.5** 3.3

[1]Tolerance range is from +0 to value listed.

Continued on next page.

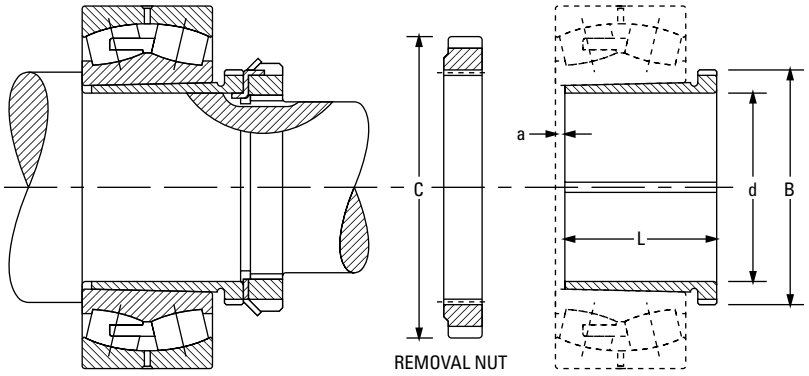

Tapered bore bearing mounted with push-type removable sleeve.

Continued from previous page.

Bearing Number	Accessory Numbers				Shaft Dimensions		Adapter Dimensions			Removal Nut O.D. C	Sleeve Weight
	Sleeve	Locknut	Lockwasher Lockplate	Removal Nut	Diameter d	Tolerance[1]	Pitch Diameter B	L	a		
					mm in.	**mm** in.	**mm** in.	**mm** in.	**mm** in.	**mm** in.	**kg.** lbs.
22322K	SK-11023	AN-20	W-20	ARN-22	**100** 3.9370	**-0.10** -0.004	**119.94** 4.722	**98** 3.858	**4.00** 0.157	**158.75** 6.250	**1.9** 4.2
22324K	SK-12023	AN-22	W-22	ARN-24	**110** 4.3307	**-0.13** -0.005	**130.28** 5.129	**105** 4.134	**4.00** 0.157	**174.63** 6.875	**2.2** 5.0
22326K	SK-13023	AN-22	W-22	ARN-26	**115** 4.5276	**-0.13** -0.005	**141.38** 5.566	**115** 4.528	**4.00** 0.157	**184.15** 7.250	**3.6** 8.0
22328K	SK-14023	AN-24	W-24	RN-28	**125** 4.9213	**-0.13** -0.005	**152.73** 6.013	**125** 4.921	**5.00** 0.197	**200.03** 7.875	**4.3** 9.5
22330K	SK-15023	AN-26	W-26	RN-30	**135** 5.3150	**-0.13** -0.005	**163.04** 6.419	**135** 5.315	**5.00** 0.197	**209.55** 8.250	**5.1** 11.4
22332K	SK-16023	AN-28	W-28	RN-32	**140** 5.5118	**-0.13** -0.005	**173.76** 6.841	**140** 5.512	**6.00** 0.236	**225.43** 8.875	**7.0** 15.5
22334K	SK-17023	AN-30	W-30	RN-34	**150** 5.9055	**-0.13** -0.005	**184.07** 7.247	**146** 5.748	**6.00** 0.236	**234.95** 9.250	**7.8** 17.2
22336K	SK-18023	AN-32	W-32	RN-36	**160** 6.2992	**-0.13** -0.005	**194.79** 7.669	**154** 6.063	**6.00** 0.236	**247.65** 9.750	**9.1** 20.2
22338K	SK-19023	AN-34	W-34	RN-38	**170** 6.6929	**-0.13** -0.005	**205.92** 8.107	**160** 6.299	**7.00** 0.276	**269.88** 10.625	**10.0** 22.1
22340K	SK-20023	AN-36	W-36	N-044	**180** 7.0866	**-0.13** -0.005	**217.02** 8.544	**170** 6.693	**7.00** 0.276	**279.53** 11.005	**11.4** 25.2
22344K	SK-22023	AN-40	W-40	N-048	**200** 7.8740	**-0.13** -0.005	**236.98** 9.330	**181** 7.126	**8.00** 0.315	**290.65** 11.443	**13.3** 29.5
22348K	SK-24023	N-44	W-44	N-052	**220** 8.6614	**-0.15** -0.006	**256.03** 10.080	**189** 7.441	**8.00** 0.315	**309.70** 12.193	**15.5** 34.2
22352K	SK-26023	N-048	P-48	N-056	**240** 9.4488	**-0.15** -0.006	**276.66** 10.892	**200** 7.874	**8.00** 0.315	**330.33** 13.005	**18.2** 40.2
22356K	SK-28023	N-052	P-52	RN-56	**260** 10.2362	**-0.15** -0.006	**301.27** 11.861	**210** 8.268	**10.00** 0.394	**425.45** 16.75	**22.0** 48.5

[1]Tolerance range is from +0 to value listed.

INCH ACCESSORIES – LOCKNUTS AND LOCKWASHERS

- The chart below shows dimensions for locknuts and lockwashers used in the mounting of straight bore bearings on shafts.
- Other dimensions and tolerances related to shaft configurations are also shown.
- Dimensions are presented according to bearing bore size and are applicable to bearings in the various series (e.g., 222, 223, etc.).

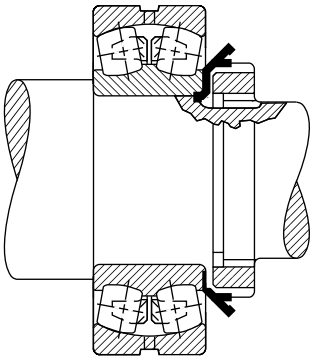

Bearing Bore	Locknut	Lockwasher	Threads Per Inch	Threads					
				Major Diameter		Pitch Diameter		Minor Dia.	Relief Dia. A
				Max.	Min.	Max.	Min.		
mm				**mm** in.	**mm** in.	**mm** in.	**mm** in.	**mm** in.	**mm** in.
35	N 07	W 07	18	**34.950** 1.3760	**34.740** 1.3678	**34.030** 1.3399	**33.930** 1.3359	**33.220** 1.3078	**32.820** 1.2922
40	N 08	W 08	18	**39.700** 1.5630	**39.490** 1.5548	**38.780** 1.5269	**38.670** 1.5224	**37.970** 1.4948	**37.570** 1.4792
45	N 09	W 09	18	**44.880** 1.7670	**44.670** 1.7588	**43.960** 1.7309	**43.850** 1.7264	**43.150** 1.6988	**42.750** 1.6832
50	N 10	W 10	18	**49.960** 1.9670	**49.750** 1.9588	**49.050** 1.9309	**48.930** 1.9264	**48.230** 1.8988	**47.830** 1.8832
55	N 11	W 11	18	**54.790** 2.1570	**54.580** 2.1488	**53.870** 2.1209	**53.740** 2.1158	**53.060** 2.0888	**52.660** 2.0732
60	N 12	W 12	18	**59.940** 2.3600	**59.740** 2.3518	**59.030** 2.3239	**58.900** 2.3188	**58.210** 2.2918	**57.820** 2.2762
65	N 13	W 13	18	**64.720** 2.5480	**64.510** 2.5398	**63.800** 2.5119	**63.670** 2.5068	**62.990** 2.4798	**62.590** 2.4642
70	N 14	W 14	18	**69.880** 2.7510	**69.670** 2.7428	**68.960** 2.7149	**68.830** 2.7098	**68.140** 2.6828	**67.750** 2.6672
75	AN 15	W 15	12	**74.500** 2.9330	**74.210** 2.9218	**73.120** 2.8789	**72.990** 2.8735	**71.900** 2.8308	**71.110** 2.7995
80	AN 16	W 16	12	**79.680** 3.1370	**79.400** 3.1258	**78.310** 3.0829	**78.160** 3.0770	**77.080** 3.0348	**76.290** 3.0035
85	AN 17	W 17	12	**84.840** 3.3400	**84.550** 3.3288	**83.460** 3.2859	**83.310** 3.2800	**82.240** 3.2378	**81.450** 3.2065
90	AN 18	W 18	12	**89.590** 3.5270	**89.300** 3.5158	**88.210** 3.4729	**88.020** 3.4655	**86.990** 3.4248	**86.200** 3.3935
95	AN 19	W 19	12	**94.740** 3.7300	**94.460** 3.7188	**93.370** 3.6759	**93.180** 3.6685	**92.150** 3.6278	**91.350** 3.5965
100	AN 20	W 20	12	**99.520** 3.9180	**99.230** 3.9068	**98.140** 3.8639	**97.960** 3.8565	**96.920** 3.8158	**96.130** 3.7845
105	AN 21	W 21	12	**104.700** 4.1220	**104.410** 4.1108	**103.320** 4.0679	**103.110** 4.0596	**102.100** 4.0198	**101.310** 3.9885
110	AN 22	W 22	12	**109.860** 4.3250	**109.570** 4.3138	**108.480** 4.2709	**108.270** 4.2626	**107.260** 4.2228	**106.460** 4.1915
120	AN 24	W 24	12	**119.790** 4.7160	**119.500** 4.7048	**118.410** 4.6619	**118.200** 4.6536	**117.190** 4.6138	**116.400** 4.5825

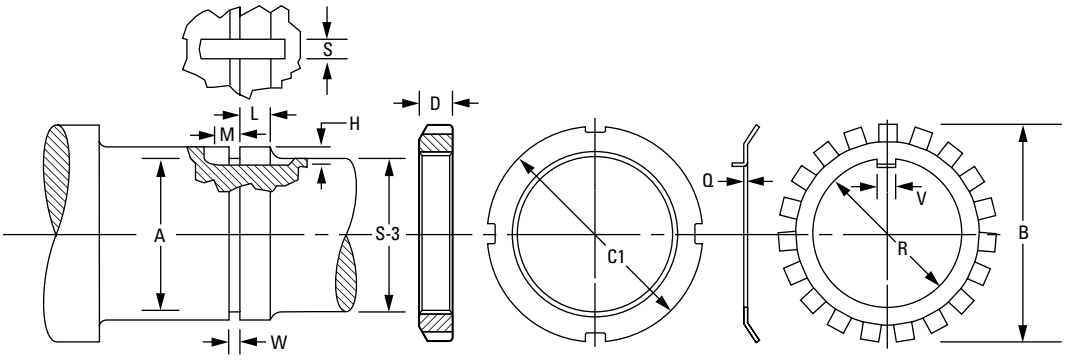

Shaft						Locknut		Lockwasher			
S-3[1]	W[2]	L[2]	H[2]	S[2]	M[2]	C_1	D	Q	R	B	V
mm in	mm in	mm in	mm in	mm in	mm in	mm in	mm in	mm in	mm in	mm in	mm in
31.750 1 1/4	**2.4** 3/32	**12.7** 1/2	**2.4** 3/32	**4.8** 3/16	**3.2** 1/8	**52.39** 2 1/16	**11.40** 0.448	**1.30** 0.050	**36.00** 1.416	**57.20** 2 1/4	**4.50** 0.176
36.510 1 7/16	**3.2** 1/8	**13.5** 17/32	**2.4** 3/32	**7.9** 5/16	**3.2** 1/8	**57.15** 2 1/4	**11.40** 0.448	**1.50** 0.058	**40.70** 1.603	**62.70** 2 15/32	**7.40** 0.290
42.860 1 11/16	**3.2** 1/8	**13.5** 17/32	**2.4** 3/32	**7.9** 5/16	**4.0** 5/32	**64.30** 2 17/32	**11.40** 0.448	**1.50** 0.058	**46.20** 1.817	**69.50** 2 47/64	**7.40** 0.290
47.630 1 7/8	**3.2** 1/8	**15.1** 19/32	**2.4** 3/32	**7.9** 5/16	**4.0** 5/32	**68.30** 2 11/16	**13.00** 0.510	**1.50** 0.058	**51.20** 2.017	**74.20** 2 59/64	**7.40** 0.290
52.390 2 1/16	**3.2** 1/8	**15.1** 19/32	**3.2** 1/8	**7.9** 5/16	**4.0** 5/32	**75.40** 2 31/32	**13.00** 0.510	**1.60** 0.063	**56.10** 2.207	**79.00** 3 7/64	**7.40** 0.290
57.150 2 1/4	**3.2** 1/8	**15.9** 5/8	**3.2** 1/8	**7.9** 5/16	**4.0** 5/32	**80.20** 3 5/32	**13.70** 0.541	**1.60** 0.063	**61.60** 2.425	**85.00** 3 11/32	**7.40** 0.290
61.910 2 7/16	**3.2** 1/8	**16.7** 21/32	**3.2** 1/8	**7.9** 5/16	**4.0** 5/32	**85.70** 3 3/8	**14.60** 0.573	**1.60** 0.063	**66.40** 2.613	**90.90** 3 37/64	**7.40** 0.290
66.680 2 5/8	**3.2** 1/8	**16.7** 21/32	**3.2** 1/8	**7.9** 5/16	**6.4** 1/4	**92.10** 3 5/8	**14.60** 0.573	**1.60** 0.063	**71.50** 2.816	**97.20** 3 53/64	**7.40** 0.290
71.440 2 13/16	**4.0** 5/32	**17.5** 11/16	**3.2** 1/8	**7.9** 5/16	**6.4** 1/4	**98.40** 3 7/8	**15.30** 0.604	**1.60** 0.072	**76.30** 3.003	**104.40** 4 7/64	**7.40** 0.290
76.200 3	**4.0** 5/32	**17.5** 11/16	**3.2** 1/8	**9.5** 3/8	**6.4** 1/4	**105.60** 4 5/32	**15.30** 0.604	**1.80** 0.072	**81.50** 3.207	**111.10** 4 3/8	**9.00** 0.353
80.960 3 3/16	**4.0** 5/32	**16.7** 21/32	**3.2** 1/8	**9.5** 3/8	**6.4** 1/4	**111.90** 4 13/32	**16.10** 0.635	**1.80** 0.072	**87.00** 3.425	**117.50** 4 5/8	**9.00** 0.353
85.730 3 3/8	**4.0** 5/32	**20.6** 13/16	**4.0** 5/32	**9.5** 3/8	**6.4** 1/4	**118.30** 4 21/32	**17.70** 0.698	**2.40** 0.094	**91.70** 3.612	**125.40** 4 15/16	**9.00** 0.353
90.490 3 9/16	**4.0** 5/32	**21.4** 27/32	**4.0** 5/32	**9.5** 3/8	**6.4** 1/4	**125.40** 4 15/16	**18.50** 0.729	**2.40** 0.094	**97.30** 3.830	**132.60** 5 7/32	**9.00** 0.353
96.840 3 13/16	**4.0** 5/32	**22.2** 7/8	**4.0** 5/32	**9.5** 3/8	**7.9** 5/16	**131.80** 5 3/16	**19.30** 0.760	**2.40** 0.094	**102.10** 4.018	**139.70** 5 1/2	**9.00** 0.353
100.010 3 15/16	**4.0** 5/32	**22.2** 7/8	**4.0** 5/32	**9.5** 3/8	**7.9** 5/16	**138.10** 5 7/16	**19.30** 0.760	**2.40** 0.094	**107.20** 4.222	**144.90** 5 45/64	**9.00** 0.353
106.360 4 3/16	**4.0** 5/32	**23** 29/32	**4.8** 3/16	**9.5** 3/8	**7.9** 5/16	**145.30** 5 23/32	**20.10** 0.791	**3.20** 0.125	**112.40** 4.425	**154.00** 6 1/16	**9.00** 0.353
115.890 4 9/16	**4.0** 5/32	**23.8** 15/16	**4.8** 3/16	**9.5** 3/8	**7.9** 5/16	**155.60** 6 1/8	**20.90** 0.823	**3.20** 0.125	**122.70** 4.831	**164.30** 6 15/32	**9.00** 0.353

[1]See page 160, table 32 for suggested S-3 shaft limits.
[2]For W, L, H, S and M, tolerance is -0 to +1/64 inch, -0 to +0.4 mm.

Continued on next page.

INCH ACCESSORIES – LOCKNUTS AND LOCKWASHERS – *continued*

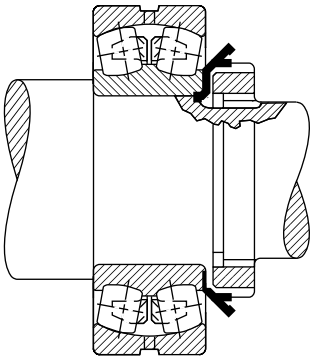

- The chart below shows dimensions for locknuts and lockwashers used in the mounting of straight bore bearings on shafts.
- Other dimensions and tolerances related to shaft configurations are also shown.
- Dimensions are presented according to bearing bore size and are applicable to bearings in the various series (e.g., 222 and 223, etc.).

Continued from previous page.

Bearing Bore	Locknut	Lockwasher	Threads Per Inch	Threads					
				Major Diameter		Pitch Diameter		Minor Dia.	Relief Dia. A
				Max.	Min.	Max.	Min.		
mm				**mm** in.	**mm** in.	**mm** in.	**mm** in.	**mm** in.	**mm** in.
130	AN 26	W 26	12	**129.690** 5.1060	**129.410** 5.0948	**128.320** 5.0519	**128.110** 5.0436	**127.100** 5.0038	**126.300** 4.9725
140	AN 28	W 28	12	**139.620** 5.4970	**139.340** 5.4858	**138.250** 5.4429	**138.040** 5.4346	**137.030** 5.3948	**136.230** 5.3635
150	AN 30	W 30	12	**149.560** 5.8880	**149.270** 5.8768	**148.180** 5.8339	**147.970** 5.8256	**146.960** 5.7858	**146.160** 5.7545
160	AN 32	W 32	8	**159.610** 6.2840	**159.230** 6.2688	**157.550** 6.2028	**157.320** 6.1937	**155.720** 6.1306	**154.920** 6.0993
170	AN 34	W 34	8	**169.140** 6.6590	**168.750** 6.6438	**167.080** 6.5778	**166.850** 6.5687	**165.240** 6.5056	**164.450** 6.4743
180	AN 36	W 36	8	**179.480** 7.0660	**179.090** 7.0508	**177.410** 6.9848	**177.180** 6.9757	**175.580** 6.9126	**174.790** 6.8813
190	AN 38	W 38	8	**189.790** 7.4720	**189.400** 7.4568	**187.730** 7.3908	**187.500** 7.3817	**185.890** 7.3186	**185.100** 7.2873
200	AN 40	W 40	8	**199.310** 7.8470	**198.930** 7.8318	**197.250** 7.7658	**196.960** 7.7544	**195.420** 7.6936	**194.620** 7.6623
220	N 044	W 44	8	**219.150** 8.6280	**218.770** 8.6128	**217.090** 8.5468	**216.780** 8.5347	**215.250** 8.4746	**214.460** 8.4433

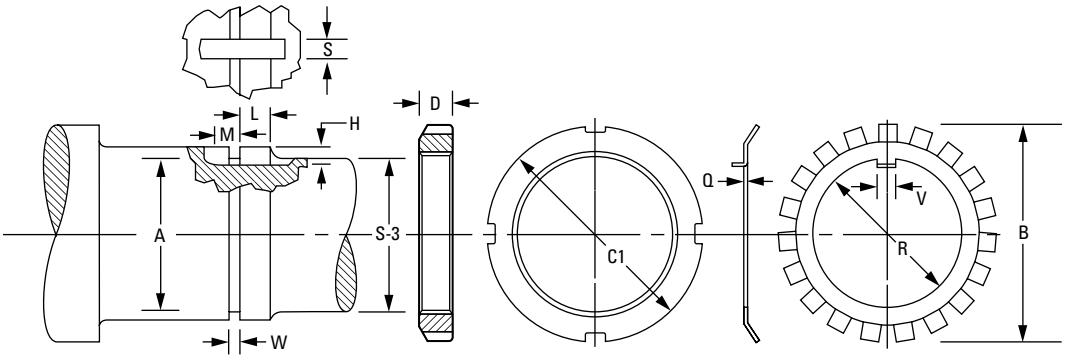

Shaft						Locknut		Lockwasher			
S-3[1]	W[2]	L[2]	H[2]	S[2]	M[2]	C_1	D	Q	R	B	V
mm in	**mm** in	**mm** in	**mm** in	**mm** in	**mm** in	**mm** in	**mm** in	**mm** in	**mm** in	**mm** in	**mm** in
125.410 4 15/16	**4.0** 5/32	**25.4** 1	**4.8** 3/16	**12.7** 1/2	**7.9** 5/16	**171.50** 6 3/4	**22.50** 0.885	**3.20** 0.125	**132.70** 5.226	**178.60** 7 1/32	**11.10** 0.435
134.940 5 5/16	**4.0** 5/32	**27** 1 1/16	**4.8** 3/16	**15.9** 5/8	**7.9** 5/16	**180.20** 7 3/32	**24.10** 0.948	**3.20** 0.125	**142.70** 5.617	**188.90** 7 7/16	**15.00** 0.590
146.050 5 3/4	**4.0** 5/32	**28.6** 1 1/8	**5.6** 7/32	**15.9** 5/8	**9.5** 3/8	**195.30** 7 11/16	**24.90** 0.979	**4.00** 0.156	**152.90** 6.018	**204.80** 8 1/16	**15.00** 0.590
153.990 6 1/16	**6.4** 1/4	**30.2** 1 3/16	**6.0** 15/64	**15.9** 5/8	**9.5** 3/8	**204.80** 8 1/16	**26.40** 1.041	**4.00** 0.156	**163.20** 6.424	**214.30** 8 7/16	**15.00** 0.590
163.510 6 7/16	**6.4** 1/4	**31** 1 7/32	**6.0** 15/64	**19.1** 3/4	**9.5** 3/8	**219.90** 8 21/32	**27.30** 1.073	**4.00** 0.156	**172.70** 6.799	**230.20** 9 1/16	**18.20** 0.715
174.630 6 7/8	**6.4** 1/4	**31.8** 1 1/4	**6.0** 15/64	**19.1** 3/4	**9.5** 3/8	**230.20** 9 1/16	**28.00** 1.104	**4.00** 0.156	**183.00** 7.206	**239.70** 9 7/16	**18.20** 0.715
184.150 7 1/4	**6.4** 1/4	**32.5** 1 9/32	**6.0** 15/64	**19.1** 3/4	**9.5** 3/8	**240.50** 9 15/32	**28.80** 1.135	**4.00** 0.156	**193.30** 7.612	**250.80** 9 7/8	**18.20** 0.715
193.680 7 5/8	**6.4** 1/4	**34.1** 1 11/32	**6.0** 15/64	**22.2** 7/8	**9.5** 3/8	**250.00** 9 27/32	**30.40** 1.198	**4.00** 0.156	**203.60** 8.017	**261.90** 10 5/16	**21.30** 0.840
211.140 8 5/16	**6.4** 1/4	**34.9** 1 3/8	**9.5** 3/8	**27.0** 1 1/16	**9.5** 3/8	**279.40** 11	**31.80** 1.250	**3.20** 0.125	**221.10** 8.703	**290.50** 11 7/16	**23.90** 0.940

[1]See page 160, table 32 for suggested S-3 shaft limits.
[2]For W, L, H, S and M, tolerance is -0 to +1/64 inch, -0 to +0.4 mm.

INCH ACCESSORIES – LOCKNUTS AND LOCKPLATES

- The chart below shows dimensions for locknuts and lockplates used in the mounting of straight bore bearings on shafts.
- Other dimensions and tolerances related to shaft configurations are also shown.
- Dimensions are presented according to bearing bore size and are applicable to bearings in the various series (e.g., 222, 223, etc.).

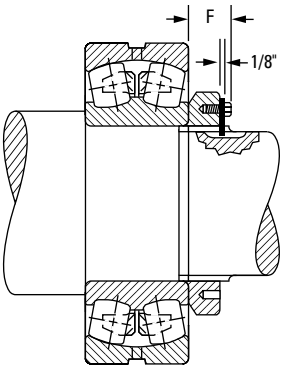

Bearing Bore	Locknut	Lockplate	Threads Per Inch	Threads					
				Major Diameter		Pitch Diameter		Minor Dia.	Relief Dia. A
				Max.	Min.	Max.	Min.		
mm				**mm** in	**mm** in	**mm** in	**mm** in	**mm** in	**mm** in
240	N 048	P 48	6	**239.83** 9.442	**239.31** 9.4218	**237.08** 9.3337	**236.76** 9.3213	**234.63** 9.2374	**233.44** 9.1905
260	N 052	P 52	6	**258.88** 10.192	**258.36** 10.1718	**256.13** 10.0837	**255.8** 10.0707	**253.68** 9.9874	**252.49** 9.9405
280	N 056	P 56	6	**279.50** 11.004	**278.99** 10.9838	**276.75** 10.8957	**276.42** 10.8827	**274.31** 10.7994	**273.11** 10.7525
300	N 060	P 60	6	**299.34** 11.785	**298.83** 11.7648	**296.59** 11.6767	**296.26** 11.6637	**294.14** 11.5804	**292.95** 11.5335
320	N 064	P 64	6	**319.08** 12.562	**318.56** 12.5418	**316.32** 12.4537	**315.98** 12.4402	**313.88** 12.3574	**312.69** 12.3105
340	N 068	P 68	5	**337.90** 13.303	**337.49** 13.287	**335.36** 13.203	**334.95** 13.187	**332.31** 13.083	**331.11** 13.036
360	N 072	P 72	5	**359.00** 14.134	**358.60** 14.118	**356.46** 14.034	**356.06** 14.018	**353.42** 13.914	**352.22** 13.867
380	N 076	P 76	5	**378.99** 14.921	**378.59** 14.905	**376.45** 14.821	**376.05** 14.805	**373.41** 14.701	**372.21** 14.654
400	N 080	P 80	5	**399.01** 15.709	**398.60** 15.693	**396.47** 15.609	**396.06** 15.593	**393.42** 15.489	**392.23** 15.442
420	N 084	P 84	5	**419.00** 16.496	**418.59** 16.480	**416.46** 16.396	**416.05** 16.380	**413.41** 16.276	**412.22** 16.229
440	N 088	P 88	5	**438.99** 17.283	**438.58** 17.267	**436.45** 17.183	**436.05** 17.167	**433.40** 17.063	**432.21** 17.016
460	N 092	P 92	5	**459.00** 18.071	**458.60** 18.055	**456.46** 17.971	**456.06** 17.955	**453.42** 17.851	**452.22** 17.804
480	N 096	P 96	5	**478.99** 18.858	**478.59** 18.842	**476.45** 18.758	**476.05** 18.742	**473.41** 18.638	**472.21** 18.591

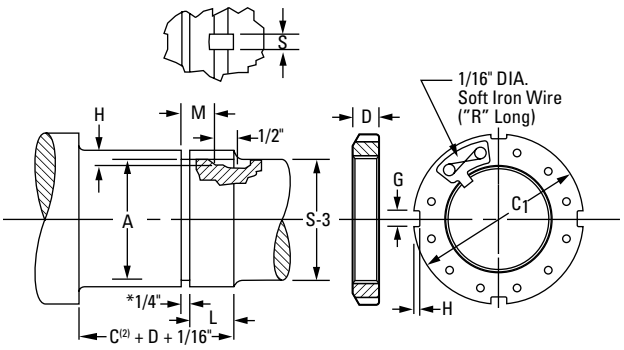

*Sizes N670 and above : 3/8"

Shaft					Locknut/Lockplate					
S-3[1]	L[3]	H[3]	S[3]	M[3]	C_1	D	G	H ±0.25 mm ±0.010 in.	R	F
mm in	mm in	mm in	mm in	mm in	mm in	mm in	mm in	mm in	mm in	mm in
233.36 9 3/16	**42.86** 1 11/16	**11.1** 7/16	**28.6** 1 1/8	**34.9** 1 3/8	**290.5** 11 7/16	**34.1** 1 11/32	**22.48** 0.885	**9.5** 3/8	**203.2** 8	**43.26** 1 45/64
252.41 9 15/16	**45.24** 1 25/32	**11.1** 7/16	**30.2** 1 3/16	**37.3** 1 15/32	**309.6** 12 3/16	**35.7** 1 13/32	**22.48** 0.885	**9.5** 3/8	**228.6** 9	**44.85** 1 49/64
273.05 10 3/4	**47.63** 1 7/8	**11.1** 7/16	**31.8** 1 1/4	**39.7** 1 9/16	**330.2** 13	**38.1** 1 1/2	**25.65** 1.010	**9.5** 3/8	**228.6** 9	**47.23** 1 55/64
292.1 11 1/2	**49.21** 1 15/16	**11.1** 7/16	**34.9** 1 3/8	**41.3** 1 5/8	**360.4** 14 3/16	**39.7** 1 9/16	**25.65** 1.010	**12.7** 1/2	**254.0** 10	**50.01** 1 31/32
312.74 12 5/16	**51.59** 2 1/32	**11.1** 7/16	**36.5** 1 7/16	**43.7** 1 23/32	**381.0** 15	**42.1** 1 21/32	**25.65** 1.010	**12.7** 1/2	**254.0** 10	**52.39** 2 1/16
331.79 13 1/16	**56.36** 2 7/32	**11.1** 7/16	**38.1** 1 1/2	**48.4** 1 29/32	**400.1** 15 3/4	**45.2** 1 25/32	**25.65** 1.010	**12.7** 1/2	**279.4** 11	**55.56** 2 3/16
350.84 13 13/16	**56.36** 2 7/32	**12.7** 1/2	**38.1** 1 1/2	**48.4** 1 29/32	**419.1** 16 1/2	**45.2** 1 25/32	**32.00** 1.260	**12.7** 1/2	**279.4** 11	**55.56** 2 3/16
371.48 14 5/8	**59.53** 2 11/32	**12.7** 1/2	**38.1** 1 1/2	**51.59** 2 1/32	**450.9** 17 3/4	**48.4** 1 29/32	**32.00** 1.260	**15.1** 19/32	**304.8** 12	**61.12** 2 13/32
390.53 15 3/8	**63.50** 2 1/2	**12.7** 1/2	**41.3** 1 5/8	**55.6** 2 3/16	**469.9** 18 1/2	**52.4** 2 1/16	**32.00** 1.260	**15.1** 19/32	**330.2** 13	**65.09** 2 9/16
411.16 16 3/16	**63.50** 2 1/2	**12.7** 1/2	**41.3** 1 5/8	**55.6** 2 3/16	**490.5** 19 5/16	**52.4** 2 1/16	**35.18** 1.385	**15.1** 19/32	**330.2** 13	**65.09** 2 9/16
431.80 17	**71.44** 2 13/16	**12.7** 1/2	**46.0** 1 13/16	**63.50** 2 1/2	**520.7** 20 1/2	**60.3** 2 3/8	**35.18** 1.385	**15.1** 19/32	**355.6** 14	**75.41** 2 31/32
450.85 17 3/4	**71.44** 2 13/16	**12.7** 1/2	**46.0** 1 13/16	**63.50** 2 1/2	**539.8** 21 1/4	**60.3** 2 3/8	**35.18** 1.385	**15.1** 19/32	**406.4** 16	**75.41** 2 31/32
469.9 18 1/2	**71.44** 2 13/16	**12.7** 1/2	**46.0** 1 13/16	**63.50** 2 1/2	**560.4** 22 1/16	**60.3** 2 3/8	**38.35** 1.510	**15.1** 19/32	**406.4** 16	**75.41** 2 31/32

[1]See page 160, table 32 for suggested S-3 shaft limits.
[2]C is outer-ring width that may be obtained from bearing dimension tables.
[3]For L, H, S and M, tolerance is -0 to +1/64 inch, -0 to + 0.4 mm.

Continued on next page.

INCH ACCESSORIES – LOCKNUTS AND LOCKPLATES – *continued*

- The chart below shows dimensions for locknuts and lockplates used in the mounting of straight bore bearings on shafts.
- Other dimensions and tolerances related to shaft configurations are also shown.
- Dimensions are presented according to bearing bore size and are applicable to bearings in the various series (e.g., 222, 223, etc.).

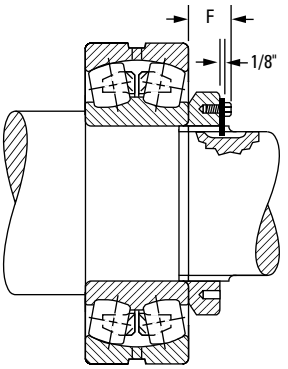

Continued from previous page.

Bearing Bore	Locknut	Lockplate	Threads Per Inch	Threads					
				Major Diameter		Pitch Diameter		Minor Dia.	Relief Dia. A
				Max.	Min.	Max.	Min.		
mm				**mm** in	**mm** in	**mm** in	**mm** in	**mm** in	**mm** in
500	N 500	P 500	5	**499.01** 19.646	**498.60** 19.630	**496.47** 19.546	**496.06** 19.530	**493.42** 19.426	**492.23** 19.379
530	N 530	P 530	4	**529.01** 20.827	**528.50** 20.807	**525.83** 20.702	**525.32** 20.682	**522.15** 20.557	**520.55** 20.494
560	N 560	P 560	4	**559.00** 22.008	**558.50** 21.988	**555.83** 21.883	**555.32** 21.863	**552.15** 21.738	**550.55** 21.675
600	N 600	P 600	4	**599.01** 23.583	**598.50** 23.563	**595.83** 23.458	**595.33** 23.438	**592.15** 23.313	**590.55** 23.250
630	N 630	P 630	4	**629.01** 24.764	**628.50** 24.744	**625.83** 24.639	**625.32** 24.619	**622.15** 24.494	**520.55** 24.431
670	N 670	P 670	4	**669.01** 26.339	**668.50** 26.319	**665.84** 26.214	**665.33** 26.194	**662.15** 26.069	**660.55** 26.006
710	N 710	P 710	3	**709.02** 27.914	**708.33** 27.887	**704.77** 27.747	**704.09** 27.720	**700.02** 27.56	**698.42** 27.497
750	N 750	P 750	3	**749.02** 29.489	**748.34** 29.462	**744.78** 29.322	**744.09** 29.295	**740.03** 29.135	**738.43** 29.072
800	N 800	P 800	3	**799.01** 31.457	**798.32** 31.430	**794.77** 31.290	**794.08** 31.263	**790.02** 31.103	**788.42** 31.040
850	N 850	P 850	3	**849.02** 33.426	**848.34** 33.399	**844.78** 33.259	**844.09** 33.232	**840.03** 33.072	**838.43** 33.009
900	N 900	P 900	3	**899.01** 35.394	**898.32** 35.367	**894.77** 35.227	**894.08** 35.200	**890.02** 35.040	**888.42** 34.977
950	N 950	P 950	3	**949.02** 37.363	**948.33** 37.336	**944.78** 37.196	**944.09** 37.169	**940.03** 37.009	**938.43** 36.946

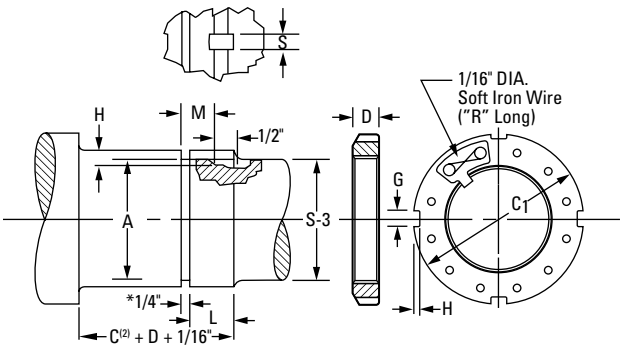

*Sizes N670 and above : 3/8"

Shaft					Locknut/Lockplate					
S-3[1]	L[3]	H[3]	S[3]	M[3]	C_1	D	G	H ±0.25 mm ±0.010 in.	R	F
mm in	**mm** in	**mm** in	**mm** in	**mm** in	**mm** in	**mm** in	**mm** in	**mm** in	**mm** in	**mm** in
489.0 19 1/4	**79.4** 3 1/8	**12.7** 1/2	**46.0** 1 13/16	**71.4** 2 13/16	**579.4** 22 13/16	**68.3** 2 11/16	**38.35** 1.510	**15.1** 19/32	**406.4** 16	**83.3** 3 9/32
517.5 20 3/8	**79.4** 3 1/8	**12.7** 1/2	**46.0** 1 13/16	**71.4** 2 13/16	**630.2** 24 13/16	**68.3** 2 11/16	**41.53** 1.635	**20.6** 13/16	**425.5** 16 3/4	**83.3** 3 9/32
549.3 21 5/8	**85.7** 3 3/8	**12.7** 1/2	**46.0** 1 13/16	**77.8** 3 1/16	**649.3** 25 9/16	**74.6** 2 15/16	**41.53** 1.635	**20.6** 13/16	**476.3** 18 3/4	**89.7** 3 17/32
587.4 23 1/8	**85.7** 3 3/8	**12.7** 1/2	**46.0** 1 13/16	**77.8** 3 1/16	**700.1** 27 9/16	**74.6** 2 15/16	**41.53** 1.635	**20.6** 13/16	**508.0** 20	**89.7** 3 17/32
619.1 24 3/8	**85.7** 3 3/8	**12.7** 1/2	**50.8** 2	**77.8** 3 1/16	**730.3** 28 3/4	**74.6** 2 15/16	**47.88** 1.885	**20.6** 13/16	**520.7** 20 1/2	**92.1** 3 5/8
657.2 25 7/8	**90.5** 3 9/16	**12.7** 1/2	**50.8** 2	**82.6** 3 1/4	**779.5** 30 11/16	**79.4** 3 1/8	**47.88** 1.885	**20.6** 13/16	**546.1** 21 1/2	**96.8** 3 13/16
695.3 27 3/8	**101.6** 4	**15.9** 5/8	**50.8** 2	**93.7** 3 11/16	**830.3** 32 11/16	**90.5** 3 9/16	**51.30** 2.020	**25.4** 1	**571.5** 22 1/2	**108.0** 4 1/4
736.6 29	**101.6** 4	**15.9** 5/8	**50.8** 2	**93.7** 3 11/16	**870.0** 34 1/4	**90.5** 3 9/16	**57.66** 2.270	**25.4** 1	**584.2** 23	**108.0** 4 1/4
787.4 31	**101.6** 4	**15.9** 5/8	**50.8** 2	**93.7** 3 11/16	**920.8** 36 1/4	**90.5** 3 9/16	**57.66** 2.270	**25.4** 1	**616.0** 24 1/4	**108.0** 4 1/4
835.0 32 7/8	**101.6** 4	**15.9** 5/8	**50.8** 2	**93.7** 3 11/16	**979.5** 38 9/16	**90.5** 3 9/16	**64.01** 2.520	**25.4** 1	**647.7** 25 1/2	**108.0** 4 1/4
885.8 34 7/8	**111.1** 4 3/8	**15.9** 5/8	**50.8** 2	**103.2** 4 1/16	**1030.3** 40 9/16	**100.0** 3 15/16	**64.01** 2.520	**25.4** 1	**666.8** 26 1/4	**117.5** 4 5/8
933.5 36 3/4	**114.3** 4 1/2	**19.1** 3/4	**50.8** 2	**108** 4 1/4	**1092.2** 43	**100.0** 3 15/16	**64.01** 2.520	**25.4** 1	**692.2** 27 1/4	**117.5** 4 5/8

[1]See page 160, table 32 for suggested S-3 shaft limits.
[2]C is outer-ring width that may be obtained from bearing dimension tables.
[3]For L, H, S and M, tolerance is -0 to +1/64 inch, -0 to + 0.4 mm.

INCH HMVC HYDRAULIC NUTS

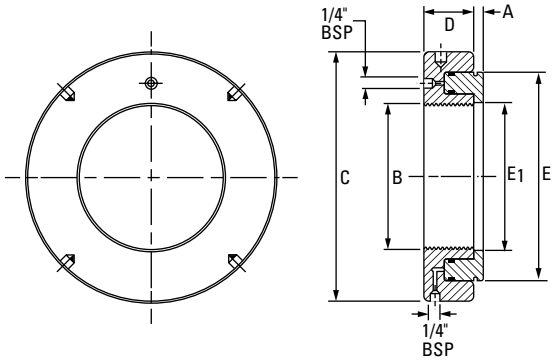

Part Number	Major Dia. B	Threads No. Per Inch	Dimensions					Piston Length of Travel	Piston Area	Assembly Weight
			C	D	E	E_1	A			
			in.	in.	in.	in.	in.	in.	in.^{2}	lbs.
HMVC - 10	1.967	18	4.488	1.496	3.386	2.008	0.157	0.197	4.5	5.5
HMVC - 12	2.360	18	4.921	1.496	3.701	2.402	0.197	0.197	5.0	6.2
HMVC - 13	2.548	18	5.315	1.496	3.976	2.598	0.197	0.197	5.4	6.6
HMVC - 14	2.751	18	5.512	1.496	4.213	2.795	0.197	0.197	6.0	7.3
HMVC - 15	2.933	12	5.709	1.496	4.409	2.992	0.197	0.197	6.3	7.7
HMVC - 16	3.137	12	5.906	1.496	4.606	3.189	0.197	0.197	6.5	8.4
HMVC - 17	3.340	12	6.102	1.496	4.803	3.386	0.197	0.197	6.8	8.6
HMVC - 18	3.527	12	6.299	1.496	5.000	3.583	0.197	0.197	7.4	9.0
HMVC - 19	3.730	12	6.496	1.496	5.236	3.780	0.197	0.197	7.7	9.7
HMVC - 20	3.918	12	6.693	1.496	5.433	3.976	0.236	0.197	8.1	10.0
HMVC - 22	4.325	12	7.087	1.496	5.866	4.370	0.236	0.197	8.8	12.5
HMVC - 24	4.716	12	7.480	1.496	6.260	4.764	0.236	0.197	9.5	11.7
HMVC - 26	5.106	12	7.874	1.496	6.693	5.157	0.236	0.197	10.1	12.5
HMVC - 28	5.497	12	8.268	1.496	7.087	5.551	0.276	0.197	10.7	13.4
HMVC - 30	5.888	12	8.661	1.535	7.480	5.945	0.276	0.197	11.6	14.5
HMVC - 32	6.284	8	9.252	1.575	8.110	6.339	0.276	0.236	13.3	17.0
HMVC - 34	6.659	8	9.645	1.614	8.465	6.732	0.276	0.236	14.7	18.5
HMVC - 36	7.066	8	10.039	1.615	8.858	7.126	0.276	0.236	16.0	20.0
HMVC - 38	7.472	8	10.630	1.653	9.409	7.520	0.315	0.276	17.8	23.1
HMVC - 40	7.847	8	11.024	1.693	9.882	7.913	0.315	0.276	19.4	25.1
HMVC - 44	8.628	8	12.008	1.732	10.748	8.740	0.315	0.354	22.3	29.5
HMVC - 48	9.442	6	12.992	1.811	11.654	9.528	0.354	0.394	25.6	35.9
HMVC - 52	10.192	6	13.976	1.850	12.559	10.315	0.354	0.433	29.1	41.8
HMVC - 56	11.004	6	14.961	1.929	13.425	11.102	0.354	0.472	32.7	48.4
HMVC - 60	11.785	6	15.945	2.008	14.331	11.890	0.394	0.551	36.6	56.3
HMVC - 64	12.562	6	16.929	2.087	15.236	12.677	0.394	0.551	40.8	65.1
HMVC - 68	13.334	5	17.717	2.087	16.063	13.465	0.394	0.551	44.0	71.5
HMVC - 72	14.170	5	18.701	2.205	16.969	14.252	0.394	0.590	48.5	81.4
HMVC - 76	14.957	5	19.685	2.283	17.795	15.039	0.433	0.630	52.1	90.2
HMVC - 80	15.745	5	20.669	2.362	18.701	15.827	0.433	0.669	56.9	101.2
HMVC - 84	16.532	5	21.457	2.401	19.606	16.614	0.433	0.669	62.0	110.9
HMVC - 88	17.319	5	22.244	2.441	20.433	17.402	0.472	0.669	65.9	121.0
HMVC - 92	18.107	5	23.228	2.520	21.299	18.189	0.472	0.669	69.8	134.2
HMVC - 96	18.894	5	24.094	2.559	22.165	18.976	0.472	0.748	75.2	143.0
HMVC - 100	19.682	5	25.000	2.598	23.031	19.764	0.472	0.748	80.6	157.3
HMVC - 106	20.867	4	26.378	2.716	24.291	20.945	0.512	0.827	87.1	176.0
HMVC - 112	21.923	4	27.756	2.795	25.591	22.126	0.512	0.866	94.9	198.0
HMVC - 120	23.623	4	29.528	2.874	27.283	23.701	0.512	0.905	104.5	220.0
HMVC - 126	24.804	4	30.709	2.913	28.583	24.882	0.551	0.905	113.0	242.0
HMVC - 134	26.379	4	32.480	2.992	30.236	26.457	0.551	0.945	123.2	270.6
HMVC - 142	27.961	3	34.252	3.071	31.969	28.031	0.590	0.984	135.9	301.4
HMVC - 150	29.536	3	36.024	3.110	33.661	29.606	0.590	0.984	150.4	330.0
HMVC - 160	31.504	3	38.189	3.150	35.748	31.575	0.630	0.984	161.2	380.6
HMVC - 170	33.473	3	40.157	3.268	37.874	33.543	0.630	1.024	177.6	418.0
HMVC - 180	35.441	3	42.126	3.386	39.960	35.511	0.669	1.181	192.2	462.0
HMVC - 190	37.410	3	44.291	3.386	42.087	37.480	0.669	1.181	210.2	523.6

HMVC - 10 through HMVC - 64 have American National Threads Class 3.

HMVC - 68 through HMVC - 190 have Acme General Purpose Threads Class 3G.

04-18 Order No. 10446 | Timken® is a registered trademark of The Timken Company. | © 2018 The Timken Company

To view more Timken catalogs, go to www.timken.com/catalogs for interactive versions, or to download a catalog app for your smart phone or mobile device scan the QR code or go to timkencatalogs.squawqr.com.

TIMKEN

The Timken team applies their know-how to improve the reliability and performance of machinery in diverse markets worldwide. The company designs, makes and markets high-performance mechanical components, including bearings, belts, brakes, clutches, chain, couplings, gears and related mechanical power transmission products and services.

Price: USD $75

Stronger. By Design.

www.timken.com